DEPARTMENT OF THE ARMY TECHNICAL MANUAL

DEPARTMENT OF THE AIR FORCE TECHNICAL ORDER

TM 11-263

TO 31R2-2GRC9-1

RADIO SETS

AN/GRC-9, AN/GRC-9A AN/GRC-9X, AND AN/GRC-9Y

DEPARTMENTS OF THE ARMY AND THE AIR FORCE

JUNE 1956

CONDENSED OPERATING INSTRUCTIONS FOR RADIO SET AN/GRC-9(*)

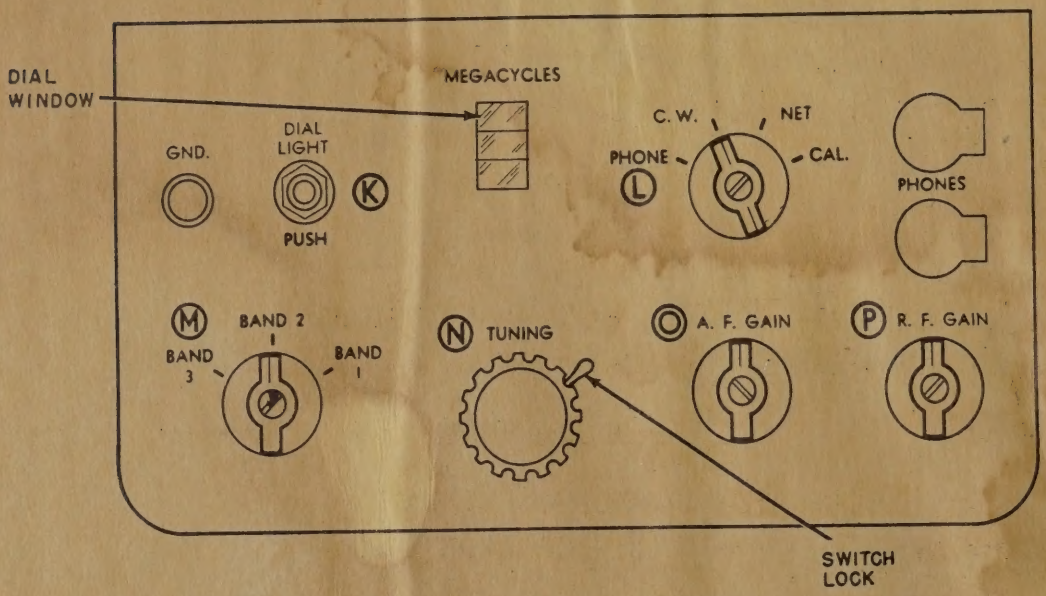

TO TURN ON RADIO SET

1. Turn switch (E) on transmitter to OFF.
2. Turn on the power supply.

Note. Be sure the key or mike switch is not closed.

TO RECEIVE

3. Turn switch (E) (on xmtr) to SEND when communicating with another set. For reception only, turn (E) to STANDBY (except when using the generator power supply).
4. Turn switch (L) to the type of reception desired.
5. Turn switch (M) to the band position desired.
6. Turn control (N) to the frequency desired and lock the TUNING dial. For CW reception, control (N) must be turned slightly above or below the transmitted signal frequency.
7. Turn controls (O) and (P) for a comfortable listening level in the headset. Rotating these controls counterclockwise reduces the volume in the headset.

TM263-414 (1)

CONTINUED ON BACK COVER.

WARNING

DANGEROUS VOLTAGES EXIST IN THIS EQUIPMENT

Be careful when working on the 425- and 580-volt dc high-voltage circuits.

DON'T TAKE CHANCES!

EXTREMELY DANGEROUS VOLTAGES EXIST IN THE FOLLOWING UNITS OF RADIO SET AN/GRC–9(*):

RECEIVER-TRANSMITTER RT–77(*)/GRC–9	425 to 580 volts
DYNAMOTOR-POWER SUPPLY DY–88/GRC–9	580 volts
DYNAMOTOR-POWER SUPPLY DY–105/GRC–9X	580 volts
VIBRATOR POWER SUPPLY PE–237	580 volts
POWER SUPPLY PP–327(*)/GRC–9Y	580 volts
GENERATOR GN–58–(*)	425 volts

TECHNICAL MANUAL
No. 11–263
TECHNICAL ORDER
No. 31R2–2GRC9–1

DEPARTMENTS OF THE ARMY AND
THE AIR FORCE
WASHINGTON 25, D. C., *20 June 1956*

RADIO SETS AN/GRC–9, AN/GRC–9A, AN/GRC–9X, AND AN/GRC–9Y

		Paragraphs	Page
CHAPTER 1.	INTRODUCTION		
Section I.	General	1–3	3
II.	Description and data	4–23	4
CHAPTER 2.	INSTALLATION		
Section I.	Service upon receipt of Radio Set AN/GRC–9(*)	24–26	20
II.	Selection of site and antenna	27, 28	25
III.	Installation of antennas for ground use	29–31	27
IV.	Ground installation	32, 33	33
V.	Vehicular installation	34–37	39
VI.	Connections	38–40	44
CHAPTER 3.	OPERATION		
Section I.	Controls and instruments	41–44	48
II.	Operation of power supplies	45, 46	52
III.	Operation of receiver	47–54	54
IV.	Operation of transmitter	55–61	57
CHAPTER 4.	ORGANIZATIONAL MAINTENANCE		
Section I.	Organizational tools, materials, and test equipment	62–64	64
II.	Removal of pluck-out components	65, 66	65
III.	Preventive maintenance services	67–71	67
IV.	Lubrication	72–74	71
V.	Weatherproofing	75, 76	72
VI.	Troubleshooting at organizational maintenance level	77–83	72
CHAPTER 5.	THEORY		
Section I.	Theory of receiver	84–99	83
II.	Theory of transmitter	100–122	98
III.	Theory of generator power supply	123–127	126
IV.	Theory of vibrator power supply PE 237	128–145	130
V.	Theory of Dynamotor-Power Supply DY–88/GRC–9	146–154	139
VI.	Theory of Dynamotor-Power Supply DY–105/GRC–9X	155–162	147
CHAPTER 6.	FIELD MAINTENANCE		
Section I.	Troubleshooting at field maintenance level	163–195	153
II.	Repairs	196–216	209
III.	Receiver alinement procedures	217–224	221
IV.	Transmitter alinement procedures	225, 226	226
V.	Final testing of receiver section	227–243	229
VI.	Final testing of transmitter	244–253	233
VII.	Final testing of power supplies	254–264	235
CHAPTER 7.	SHIPMENT AND LIMITED STORAGE AND DEMOLITION TO PREVENT ENEMY USE		
Section I.	Shipment and limited storage	265–268	240
II.	Demolition of materiel to prevent enemy use	269, 270	242
INDEX		-------	248

*** This manual supersedes TM 11–263, 1 March 1951, including C 1, 14 August 1951; C 2, 1 July 1952; C 3, 14 May 1954; and C 4, 8 December 1955.**

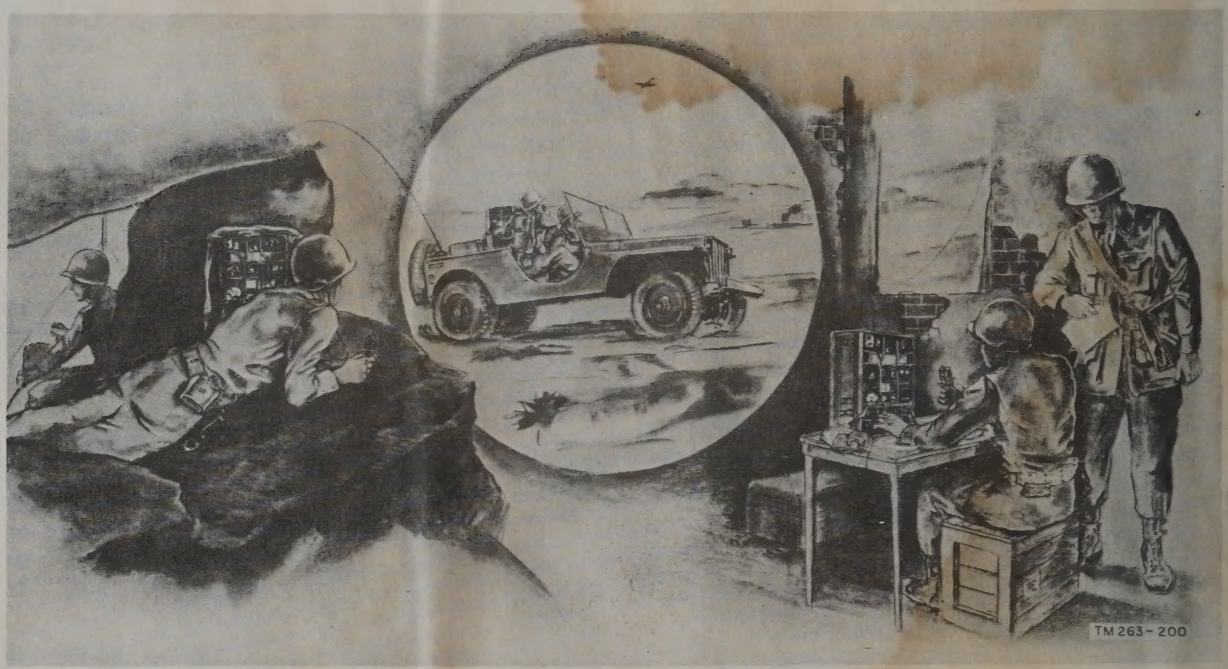

Figure 1. Typical applications for Radio Set AN/GRC–9 (*).

CHAPTER 1
INTRODUCTION

Section I. GENERAL

1. Scope

a. This manual contains information for the installation, operation, maintenance, and repair of Radio Set AN/GRC–9(*) (fig. 1).

b. Official nomenclature followed by (*) is used to indicate all models of the item of equipment included in this manual. Thus, Radio Set AN/GRC–9(*) represents Radio Sets AN/GRC–9, AN/GRC–9A, AN/GRC–9X and AN/GRC–9Y; Headset HS–30–(*) (not supplied) represents Headsets HS–30–A through –H, –J, through –M, –R, and –U; Receiver-Transmitter RT–77(*)/GRC–9 represents Receiver-Transmitters RT–77/GRC–9 and RT–77A/GRC–9; Generator GN–58–(*) represents Generators GN–58 and GN–58–A; and Power Supply PP–327(*)/GRC–9Y represents Power Supplies PP–327/GRC–9Y and PP–327A/GRC–9Y. Power Supply PP–327(*)/GRC–9Y is covered in TM 11–5070.

c. Forward comments on this publication directly to: Commanding Officer, The Signal Corps Publications Agency, Fort Monmouth, N. J.

2. Forms and Records

a. Unsatisfactory Equipment Reports. DA Form 468 (Unsatisfactory Equipment Report) will be filled out and forwarded to the Officer of the Chief Signal Officer as prescribed in AR 700–38.

b. Damaged or Improper Shipment. DD Form 6 (Report of Damaged or Improper Shipment) will be filled out and forwarded as prescribed in AR 700–58.

c. Preventive Maintenance Forms.

(1) DA Form 11–238 (Operator First Echelon Maintenance Check List for Signal Corps Equipment (Radio Communication, Direction Finding, Carrier, Radar)) will be prepared in accordance with instructions on the back of the form (fig. 52).

(2) DA Form 11–239 (Second and Third Echelon Maintenance Check List for Signal Corps Equipment (Radio Communication, Direction Finding, Carrier, Radar)) will be prepared in accordance with instructions on the back of the form (fig. 53).

3. Nomenclature and Common Name

A list of the nomenclature assignments for the components of Radio Set AN/GRC–9(*) is given below. A common usage name as used in this manual is indicated after each component.

Nemenclature	Common name
Radio Set AN/GRC–9(*)	Radio set
Receiver-Transmitter RT–77(*)/GRC–9.	Receiver-transmitter, transmitter, receiver.
Vibrator Power Supply PE–237.	Vibrator power supply
Power Supply PP–327(*)/GRC–94.	Ac power supply
Dynamotor-Power Supply DY–88/GRC–9.	Dynamotor power supply
Dynamotor-Power Supply DY–105/GRC–9X.	Dynamotor power supply
Battery BA–48	Battery power supply
Generator GN–58–(*)	Generator power supply
Headset HS–30–(*)	Headset
Antenna AT–101/GRC–9	Long-wire antenna
Antenna AT–102/GRC–9	Long-wire antenna
Mast Section MS–116 or MS–116–A.	Whip antenna
Mast Section MS–117 or MS–117–A.	Whip antenna
Mast Section MS–118 or MS–118–A.	Whip antenna

4. Purpose and Use

a. Radio Set AN/GRC–9(*) is a low-power radio transmitter and receiver that may be used in either ground or vehicular installations. The radio set receives and transmits continuous-wave (cw), amplitude-modulated (am), and modulated continuous-wave (mcw) radio-frequency (rf) signals in the 2- to 12-megacycle (mc) range.

b. A complete radio set consists of a basic unit plus an installation kit. The basic set which includes the power supplies, the installation kit, that varies for each type of vehicle (par. 22*h*), and the complete radio set each have individual stock numbers. A general purpose kit (par. 22*i*) is also available for ground installations.

c. Power supplies are interchangeable in the radio sets (fig. 2). Gasoline-engine-driven generator Power Unit PE–162–A, PE–162–B, or PE–162–C (not supplied)may also be used. Battery BA–48 (not supplied) can be used for the receiver and part of the transmitter. The nomenclature of the radio set, the power supplies furnished, and how they are used are shown in the chart below:

Radio set	Power supplies
Radio Set AN/GRC–9	Vibrator Power Supply PE–237 (for vehicular use). Generator GN–58–(*) (for ground use).
Radio Set AN/GRC–9A	Dynamotor-Power Supply DY–88/GRC–9 (for vehicular use). Generator GN–58–(*) (for ground use).
Radio Set AN/GRC–9X	Dynamotor-Power Supply DY–105/GRC–9X (for vehicular use). Generator GN–58–(*) (for ground use).
Radio Set AN/GRC–9Y	Power Supply PP–327(*)/GRC–9Y (for ground use). Generator GN–58–(*) (for ground use).

d. Microphone T–45 or T–17 (not supplied) is used for voice and Key J–45 is used to key the transmitter. A 6-, 12-, or 24-volt direct-current (dc) vehicular storage battery (not supplied) furnishes input power to Vibrator Power Supply PE–237 and Dynamotor-Power Supply DY–88/GRC–9. Only a 24-volt storage battery (not supplied) can be used with Dynamotor-Power Supply DY–105/GRC–9X. When an electronic power supply is not available, the receiver-transmitter may be operated by using the generator power supply. If the battery power supply is to be used, it must be used in conjunction with the generator power supply. Alternating current (ac) of either 115 or 230 volts is required at the input source of Power Supply PP–327(*)/GRC–9Y.

5. System Application

Radio Set AN/GRC–9(*) is used to communicate with any cw, mcw, or phone equipment that operates within the 2- to 12-mc band. It can be used an an isolated unit or in a net group. Figure 3 shows some of the communication sets than can be used with the radio set in system operation.

6. Technical Characteristics

a. Transmitter.

Frequency range:
- Band 1 ..... 6.6 to 12 mc.
- Band 2 ..... 3.6 to 6.6 mc.
- Band 3 ..... 2.0 to 3.6 mc.

Transmitter type ..... Crystal or master-oscillator power amplifier.
Crystal channels ..... Two in each band.
Types of signals transmitted ..... Cw, mcw, and phone.
Distance range:[1]
- Cw:
  - Ground operation ..... 30 miles.
  - Vehicular operation ..... 20 miles.
- Mcw:
  - Ground operation ..... 20 miles.
  - Vehicular operation ..... 10 miles.
- Voice:
  - Ground operation ..... 10 miles.
  - Vehicular operation ..... 10 miles.
- Antennas:
  - Ground operation ..... Whip or long-wire.
  - Vehicular operation ..... Whip.

Type of modulation ..... Amplitude.
Number of tubes ..... 5.
Weight ..... 29 pounds.

[1] These values are approximations, since the range will vary considerably according to terrain, atmospheric conditions, frequencies, and time of year, month, and day.

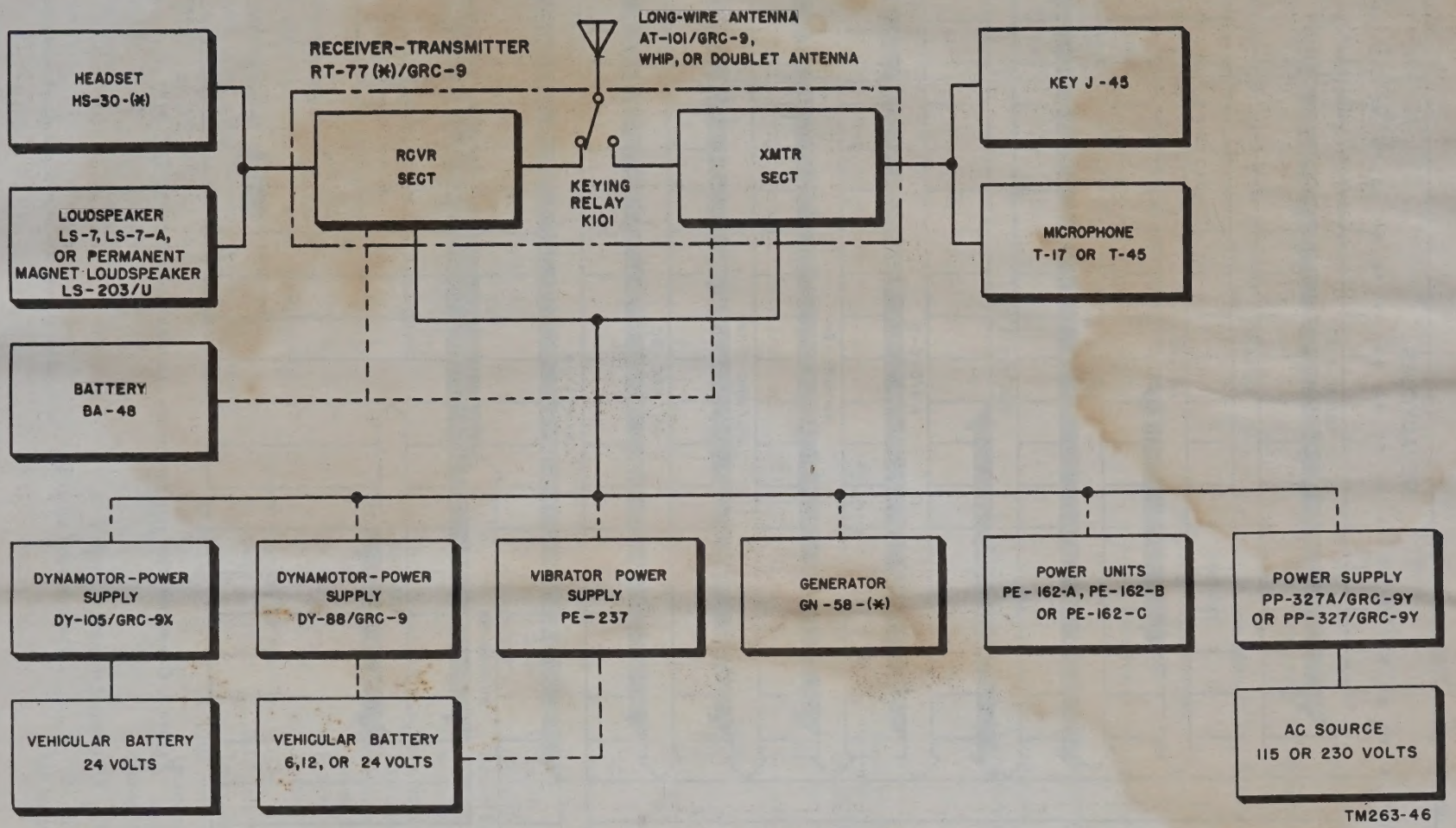

Figure 2. Radio Set AN/GRC-9 (*), simplified block diagram.

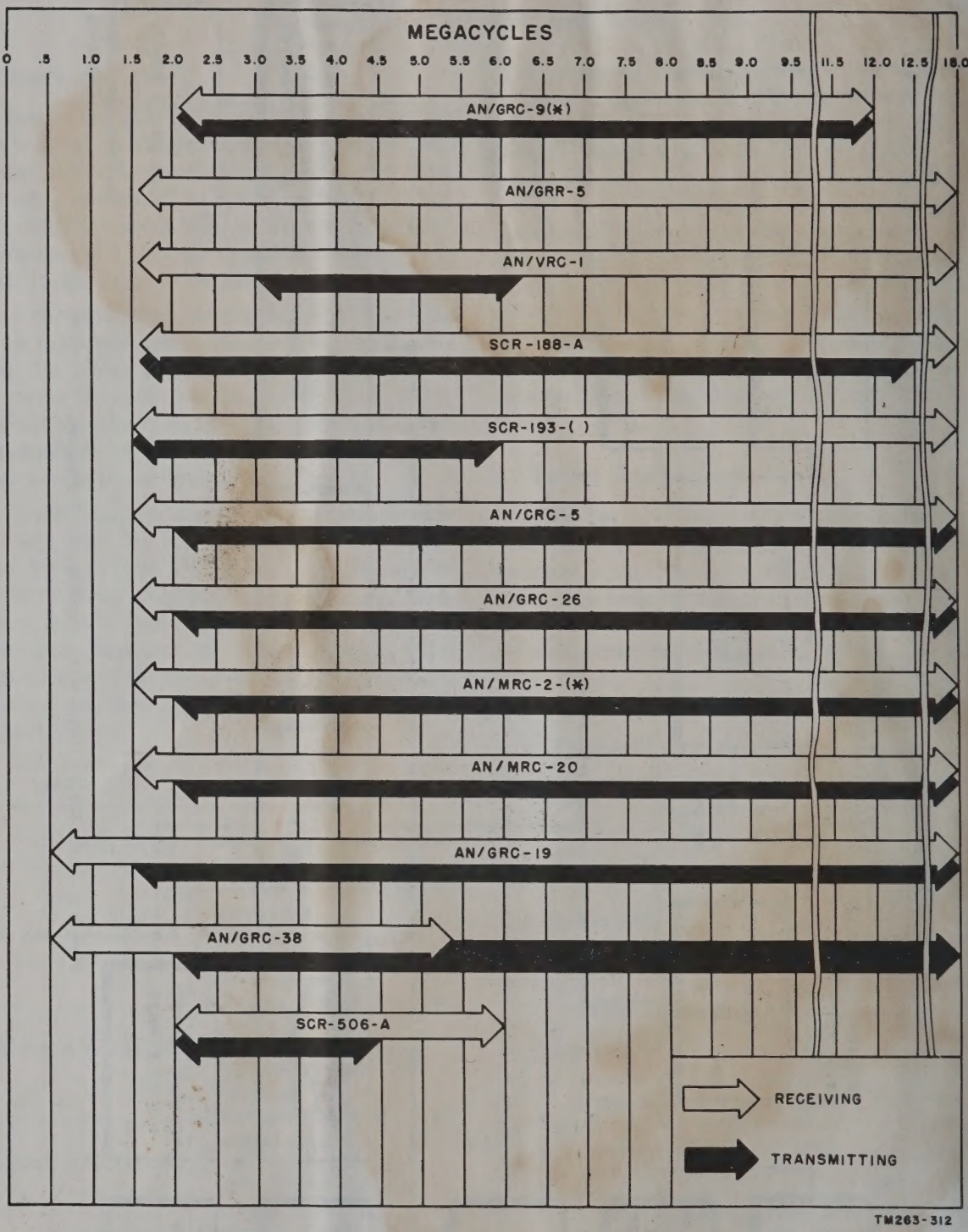

Figure 3. Communication sets for system use with Radio Set AN/GRC–9 (*).

Power source input with transmitter operating:

Vibrator Power Supply PE–237:

6-volt, high-power position.	27 amperes.
6-volt, low-power position.	24 amperes.
12-volt, high-power position.	13.2 amperes.
12-volt, low-power position.	11 amperes.
24-volt, high-power position.	7 amperes.
24-volt, low-power position.	6.2 amperes.

Dynamotor-Power Supply DY–88/GRC–9:

6-volt, high-power position.	22.2 amperes.
6-volt, low-power position.	20 amperes.
12-volt, high-power position.	12.2 amperes.
12-volt, low-power position.	11.1 amperes.
24-volt, high-power position.	6.7 amperes.
24-volt, low-power position.	6.1 amperes.

Dynamotor-Power Supply DY–105/GRC–9X:

24-volt, high-power position.	6.7 amperes.
24-volt, low-power position.	6.1 amperes.

Power Supply PP–327(*)/GRC–9Y (refer to TM 11–5070 for technical characteristics).

Power output:[2]

MOD-PWR switch, D position	Vibrator Power Supply PE–237		Generator GN–58–(*)		Power Supply PP–327(*)/GRC–9Y or Dynamotor-Power Supply DY–88/GRC–9 or DY–105/GRC–9X	
	PHONE	CW	PHONE	CW	PHONE	CW
HI	7 watts	15 watts	3.6 watts	10 watts	7 watts	15 watts
LO	1 watt	5 watts	1.2 watts	5 watts	1 watt	5 watts

[2] These values are only approximate and will vary with frequency.

b. Receiver.

Frequency range:

Band 1	6.6 mc to 12 mc.
Band 2	3.6 mc to 6.6 mc.
Band 3	2.0 mc to 3.6 mc.

Receiver type—Superheterodyne.

Types of signals received—Cw, mcw, and phone.

Number of tubes—7.

Weight—8 pounds.

Intermediate frequency—456 kc.

Method of calibration—Built-in crystal oscillator.

Calibration points—200-kc intervals.

Power Source input using standby section of Vibrator Power Supply PE–237 or Dynamotor-Power Supply DY–88/GRC–9 or DY–105/GRC–9X:

6-volt battery	1.25 amperes.
12-volt battery	.8 ampere.
24-volt battery[3]	.6 ampere.

[3] Dynamotor-Power Supply DY–105/GRC–9X requires a 24-volt dc supply only.

Power supply:

Vehicular intallation:

6-, 12-, or 24-volt storage battery.	Vibrator Power Supply PE–237 or Dynamotor-Power Supply DY–88/GRC–9 or DY–105/GRC–9X[3].
24-volt storage battery.	Dynamotor-Power Supply DY–105/GRC–9X.
Ground installation	Generator GN–58–(*), Power-Supply PP–327(*)/GRC–9Y, or Battery BA–48.

Power required by receiver:

A-power	1.4 volts at .45 ampere (maximum).
B-power	105 volts at .02 ampere (maximum).

Antenna—Uses same antenna as transmitter.

c. Vibrator Power Supply PE–237.

Supply requirements—6-, 12-, or 24-volt vehicular battery.

Full-load output:

Section	Early models	Late models
Heavy-duty:		
Transmitter plates	475 v at 90 ma	580 v at 100 ma
Transmitter filaments	6.5 v at 2 amp	6.6 v at 2 amp
Receiver plates	105 v at 42 ma	120 v at 45 ma
Receiver filaments	1.35 v at 450 ma	1.5 v at 500 ma
Keying relay	6.0 v at 500 ma	6.9 v at 575 ma
Standby:		
Receiver plates	100 v at 17 ma	110 v at 18.5 ma
Receiver filaments	1.35 v at 450 ma	1.5 at 500 ma

Full-load input (*a* and *b* above):

Weight——88 pounds.

d. Generator GN–58–(*).[4]

Supply requirements——Hand-operated.

Full-load output——Transmitter plate, 425 volts at 115 ma. Receiver plate, 105 volts at 32 ma. Transmitter filament 6.3 volts at 2.5 amperes. Receiver filament, 1.4 volts at 465 ma.

Weight——29 pounds.

e. Dynamotor-Power Supply DY–88/GRC–9.

Supply requirements——6-, 12-, or 24-volt vehicular battery.

Full-load output:

Send section——Transmitter pa screen and plates, 580 volts at 100 ma; transmitter filaments, 6.3 volts at 2 amperes; receiver and transmitter plates and screens, 105 volts at 45 ma receiver filaments, 1.4 volts at 500 ma; keying relay, 6.3 volts at 575 ma.

Standby section——Receiver plates, 105 volts at 17 ma; receiver filaments, 1.4 volts at 500 ma.

Full-load input (*a* and *b* above):

Weight——35 pounds.

f. Dynamotor-Power Supply DY–105/GRC–9X.

Supply requirements——24-volt vehicular battery (not supplied).

Full-load output:

Send section——Transmitter pa screen and plates, 580 volts at 100 ma; transmitter filaments, 6.3 volts at 2 amperes; receiver plates and screens, 105 volts at 45 ma; receiver filaments 1.4 volts at 575 ma.

Standby section——Receiver plates, 105 volts at 17 ma; receiver filaments, 1.4 volts at 500 ma.

Weight——38 pounds.

Full-load input (*a* and *b* above).

g. Power Supply PP–327(*)/GRC–9Y. For technical characteristics, refer to TM 11–5070.

[4] These values are approximate and will vary with change in crank speed.

7. Table of Components

Component	Required No.	Length (in.)	Width (in.)	Depth (in.)	Weight (lb)
Vibrator Power Supply PE–237 (fig. 10) (AN/GRC–9).	1	20	10½	10¾	74
or					
Dynamotor-Power Supply DY–88/GRC–9 (fig. 11) (AN/GRC–9A).	1	13	11¼	9½	35
or					
Dynamotor-Power Supply DY–105/GRC–9X (fig. 12) (AN/GRC–9X).	1	13⅛	14½	10	38
or					
Power Supply PP–327(*)/GRC–9Y (AN/GRC–9Y) (Refer to TM 11–5070).					

Component	Required No.	Length (in.)	Width (in.)	Depth (in.)	Weight (lb)
Hardware kit for vehicular power supply issued					
Generator GN–58–(*) (fig. 13)	1	10½	7½	8	22¾
Manuals	2				1
Mast Base MP–65 (fig. 4)	1	17½	3¼	3¼	3
Mounting MT–350/GRC–9 (fig. 4)	6	39½			4
Hardware kit for Mounting MT–350/GRC–9					½
Receiver-Transmitter RT–77(*)/GRC–9 (fig. 4)	1	16	13	8	32
Cord CD–1086 (fig. 42)	1	84			2
Cord CD–1086	1	44			1¼
Bag BG–175 (fig. 13	1	10	8	10½	2
Bag BG–175 (fig. 13)	1	16½	12½	15	2
Cord CD–1119 (fig. 42)	1	34½			1
Panel Cover CW–109/GRC–9 (fig. 29)	1	16½	11½	3¼	1
Bag BG–172 (fig. 5) containing:	1	13	13	10	25
Wire W–128 (10 ft)	1				
Guy GY–12	1				
Guy GY–42	1				
Antenna AT–101/GRC–9	1				
Antenna AT–102/GRC–9	1				
Reel RL–28	1				
Reel RL–29	1				
Counterpoise CP–12	3				
Counterpoise CP–13	1				
Bracket FT–515	1				
Key J–45	1				
Halyard M–378	1				
Halyard M–379	1				
Box BX–53 (fig. 7)	1				
Loudspeaker LS–7 or LSA7–A or Permanent Magnet Loudspeaker LS–203/U.	1				
Roll BG–174 (fig. 6) containing:	1	42	10	4½	25
Mast Section MS–116 or MS–116–A	3				
Mast Section MS–117 or MS–117–A	1				
Mast Section MS–118 or MS–118–A	1				
Stake GP–27–A or GP–27–B	4				
Leg LG–2–B or LG–2–A	1				
Leg LG–3–B or LG–3–A	2				
Cord CD–1086 (7 ft)	1	84			
Insulator IN–127	1				
Crank GC–7, hand	2				
Mast section spares (par. 21)					
Set of tuning spares (par. 21)	1				
Total weight (lb)					266½

Note. This list is for general information only. See SIG 7 and 8 AN/GRC–9 for information pertaining to requisition of spare parts.

8. Description of Receiver-Transmitter RT–77(*)/GRC–9

a. The receiver-transmitter (fig. 4) consists of separate receiver and transmitter sections. These sections are mounted in a metal case that has a tight-fitting removable metal cover. This panel cover, Panel Cover CW–109/GRC–9, has a rubber seal around the edge to prevent water from entering the set in case of immersion. When the cover is installed on the metal case, the entire assembly will float. All jacks and controls, except one, are located on the front panel. These com-

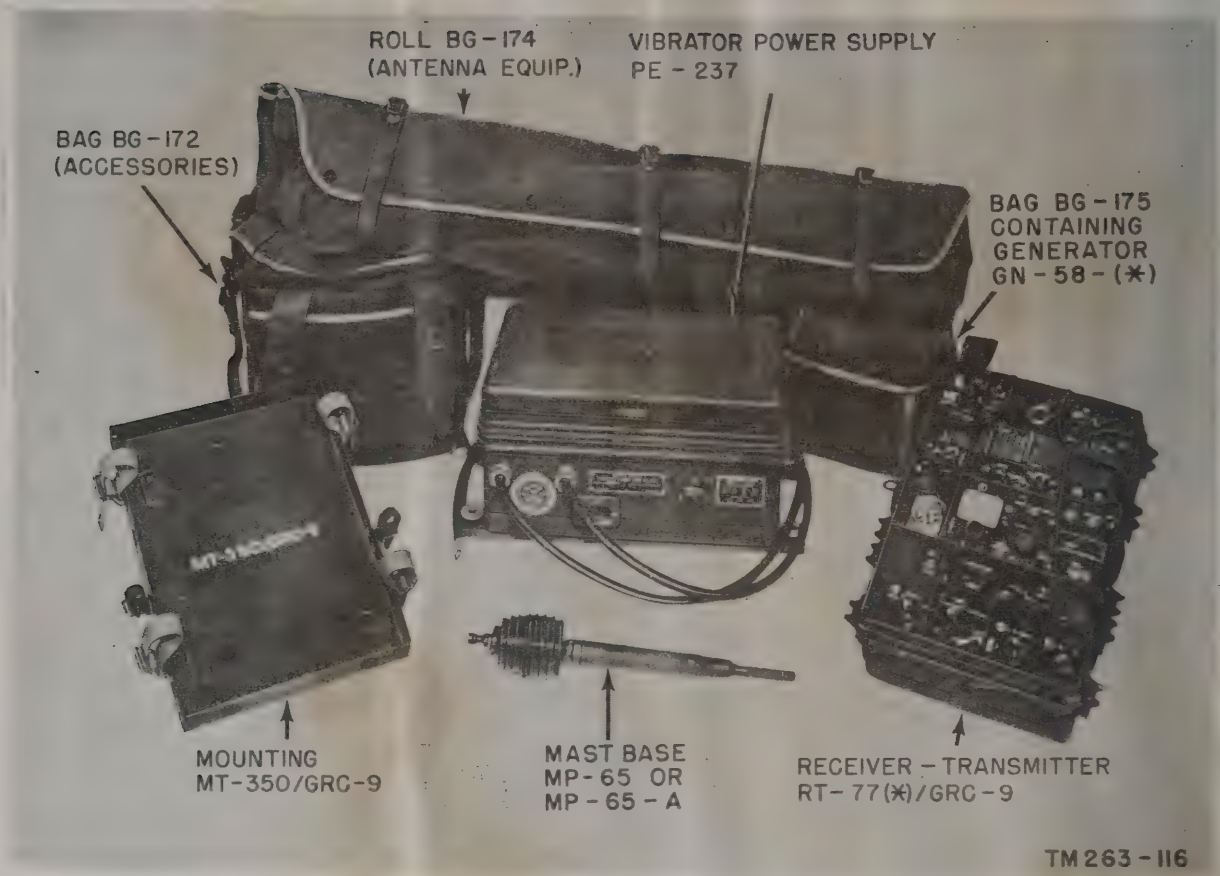

Figure 4. Components of Radio Set AN/GRC–9.

Figure 5. Bag BG–172 and contents.

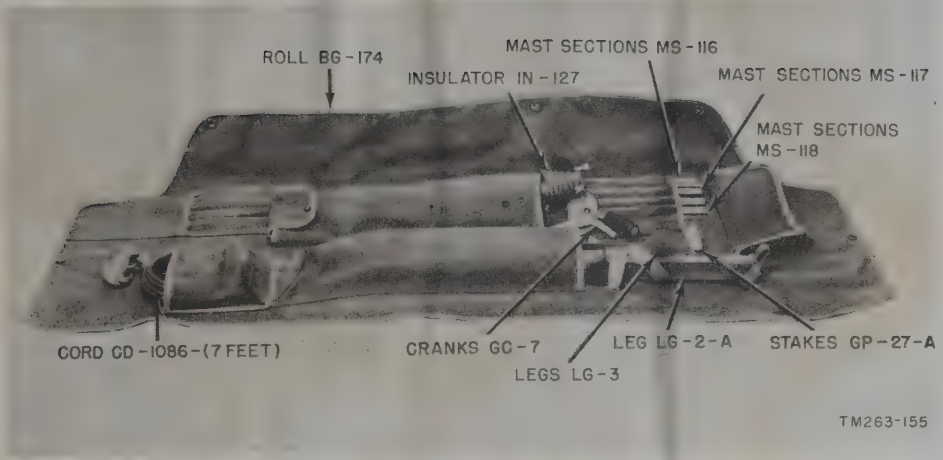

Figure 6. Roll BG–174 and contents.

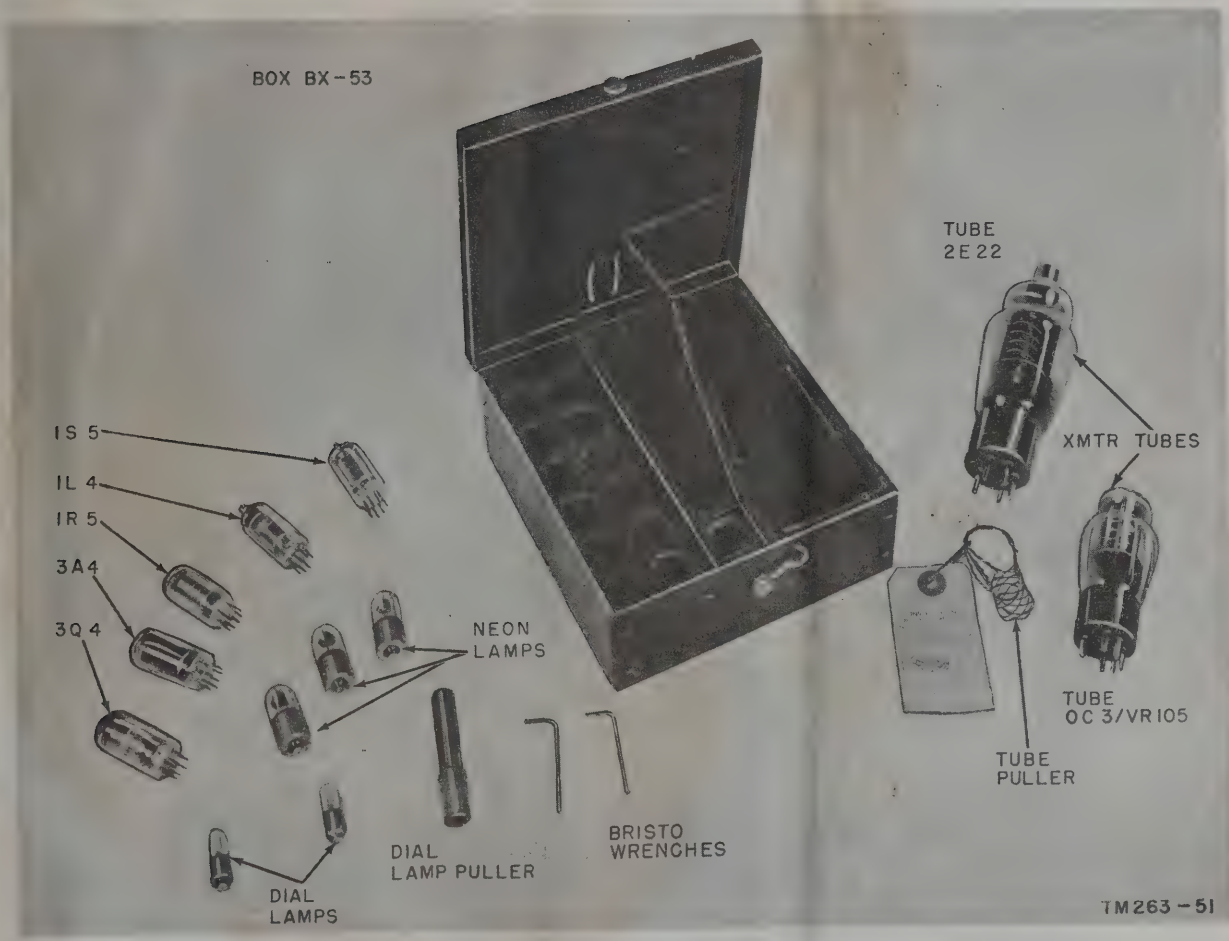

Figure 7. Box BX–53 and contents.

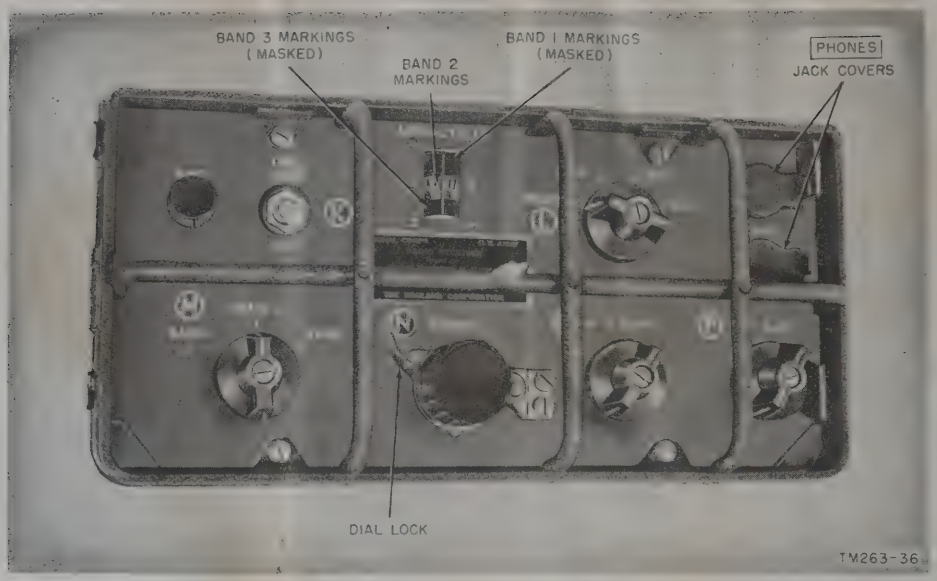

Figure 8. Receiver section of radio set.

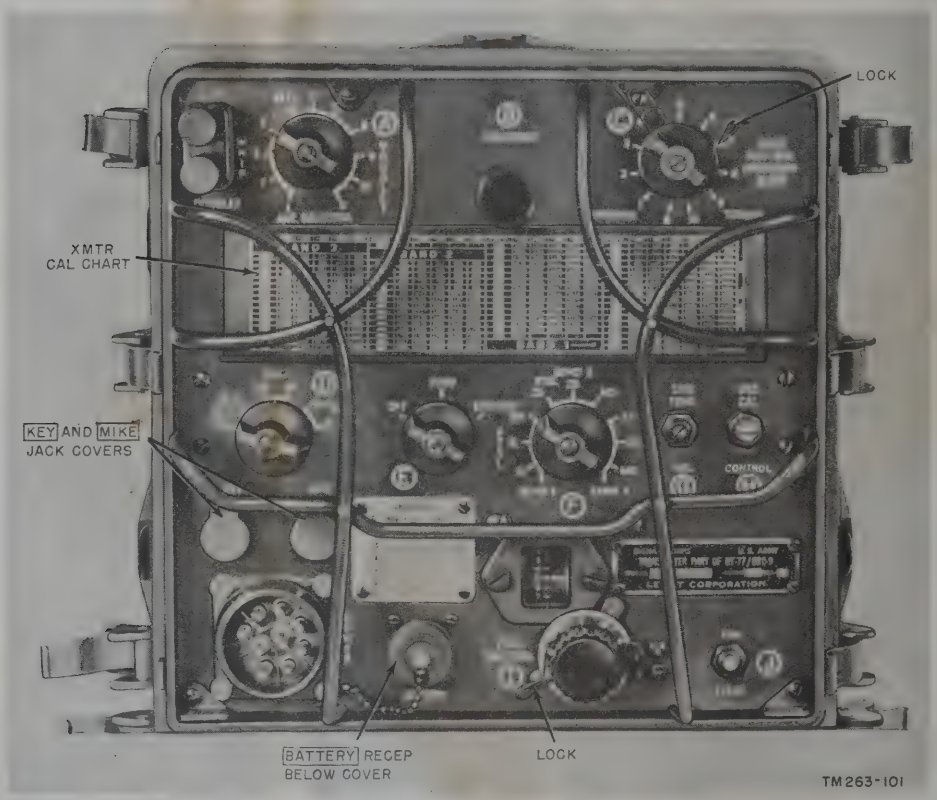

Figure 9. Transmitter section of radio set.

ponents are dirtproofed and waterproofed for complete protection of the transmitter-receiver when operating under extremely adverse weather conditions.

b. The individual units are connected by an interconnecting cable; the two ends plug into individual sockets on the transmitter and the receiver (fig. 30).

9. Description of Receiver (fig. 8)

Two PHONES jacks are provided for use with either two headsets or two loudspeakers simultaneously. The TUNING knob, control Ⓝ, may be locked at any desired dial position. The IMPEDANCE control (fig. 30), located on the rear of the receiver, is the switch that connects the receiver output circuit to the different loudspeaker and headset impedances.

10. Description of Transmitter (fig. 9)

a. The cover for the BATTERY receptacle protects the prongs of the receptacle from being bent as well as protecting them from dirt and moisture. The POWER and BATTERY receptacles are constructed so that the connecting cords can only be plugged into them in the correct position.

b. FREQ. CONTROL knob Ⓘ and ANTENNA TUNING knob Ⓒ are provided with locks to keep the knobs in place when set for operation. Two charts are provided on the front panel. One has the calibration settings of control Ⓘ already marked. The other one, the CRYSTALS chart, is marked (in pencil) with the six operating frequencies used during crystal operation.

11. Description of Vibrator Power Supply PE–237 (fig. 10)

a. The vibrator power supply is a vehicular operational component housed in a rectangular-shaped metal cabinet. The top cover is held in place by four clamps to make the unit watertight.

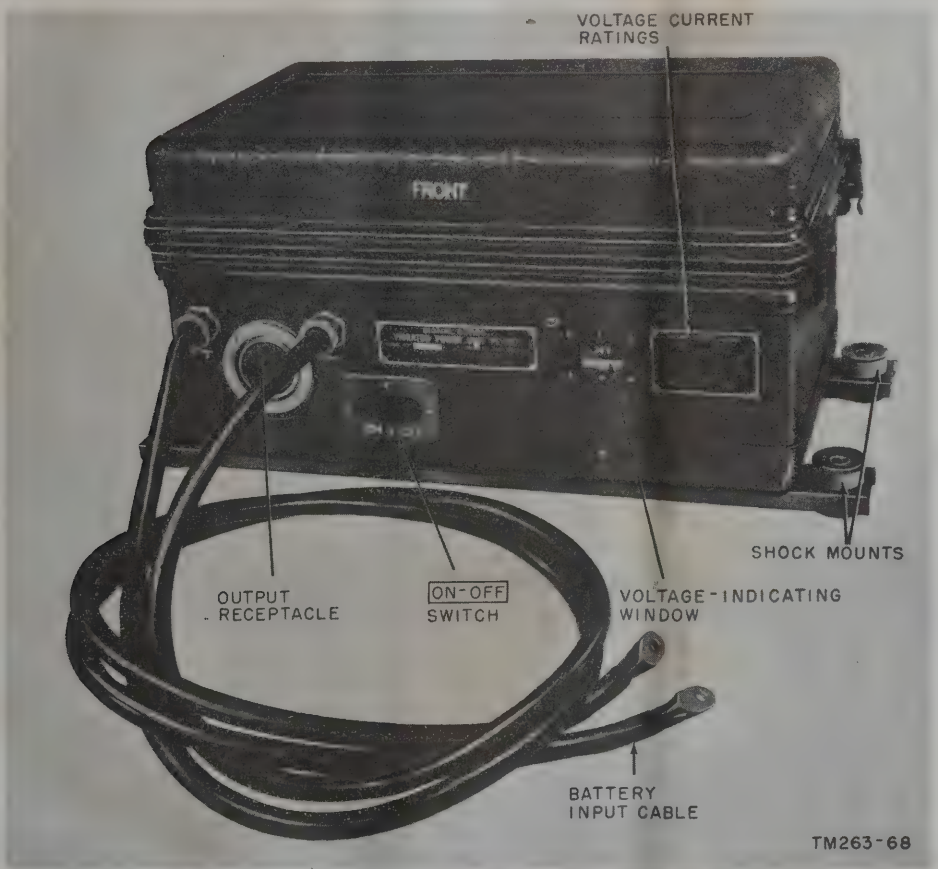

Figure 10. Vibrator Power Supply.

b. A window in the side of the case permits viewing of the input voltage setting of the unit. The ON-OFF switches is covered with a watertight neoprene gasket.

c. Two heavy rubber-covered cables emerge from outlets marked + and —. These cables are used to connect the vehicular battery to the vibrator power supply. The entire unit is supported on four shock mounts through which bolts can be passed to secure it to the vehicle.

12. Description of Dynamotor-Power Supply DY–88/GRC–9 (fig. 11)

a. The dynamotor power supply is shipped in a metal cabinet, which contains four shock-mounted fittings through which bolts can be passed to secure it to the vehicle. All of the controls are operated from the front panel except the voltage selector knob H206 (fig. 143) which is located behind the front panel. Eight clamps attached to the front panel hold the cover in place. The case of the unit is immersionproof. It is corrugated for greater strength, for cooling, and for protection from warping or damage caused by vibration and shock.

b. A window on the front panel permits viewing of the input voltage setting of the unit.

c. Electrical Special Purpose Cable Assembly CX–2031/U or CX–2031A/U is used to connect the vehicular battery to the dynamotor power supply.

13. Dynamotor-Power Supply DY–105/GRC–9X (fig. 12)

Dynamotor-Power Supply DY–105/GRC–9X is similar to Dynamotor-Power Supply DY–88/GRC–9 except for the following:

a. Dynamotor-Power Supply DY–105/GRC–9X operates only from a 24-volt vehicular battery.

b. The voltage selector switch (fig. 142) provided with Dynamotor-Power Supply DY–88/GRC–9 is not required with Dynamotor-Power Supply DY–105/GRC–9X.

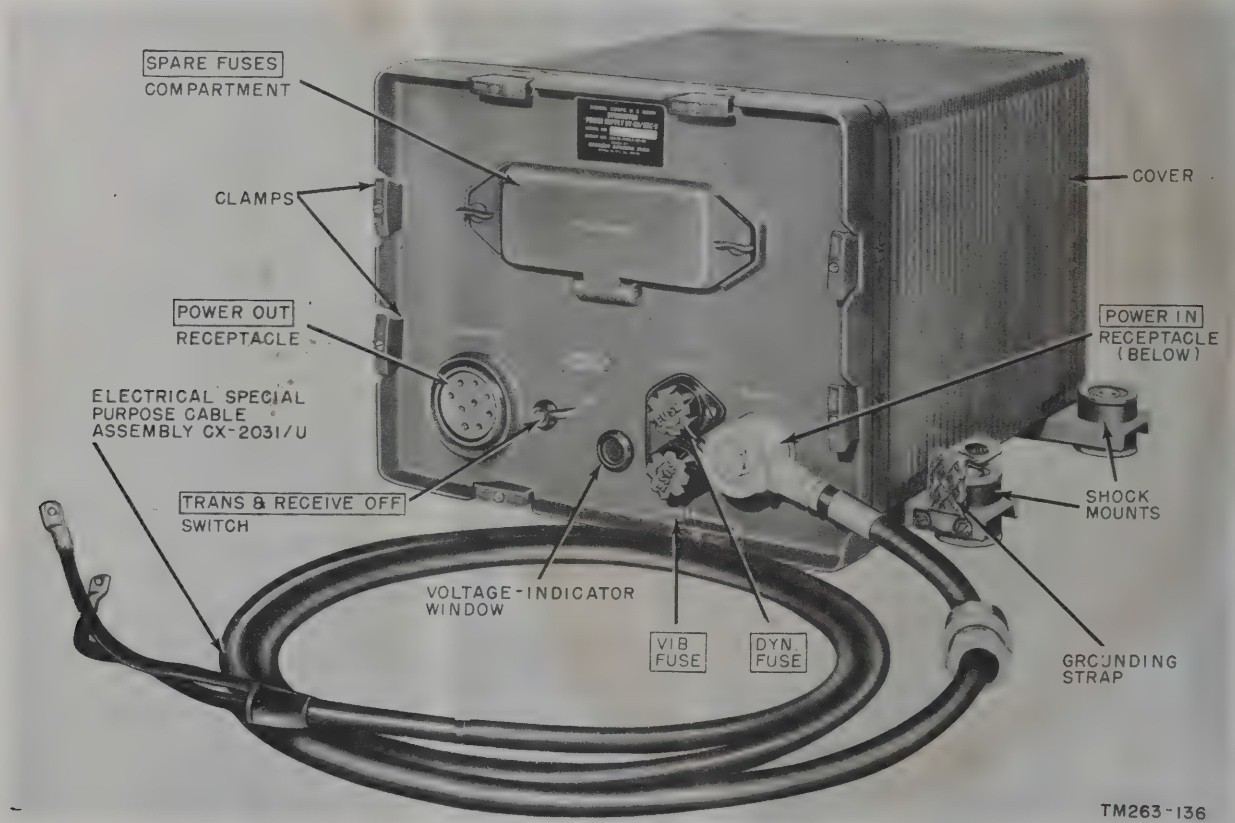

Figure 11. Dynamotor-Power Supply DY–88/GRC–9.

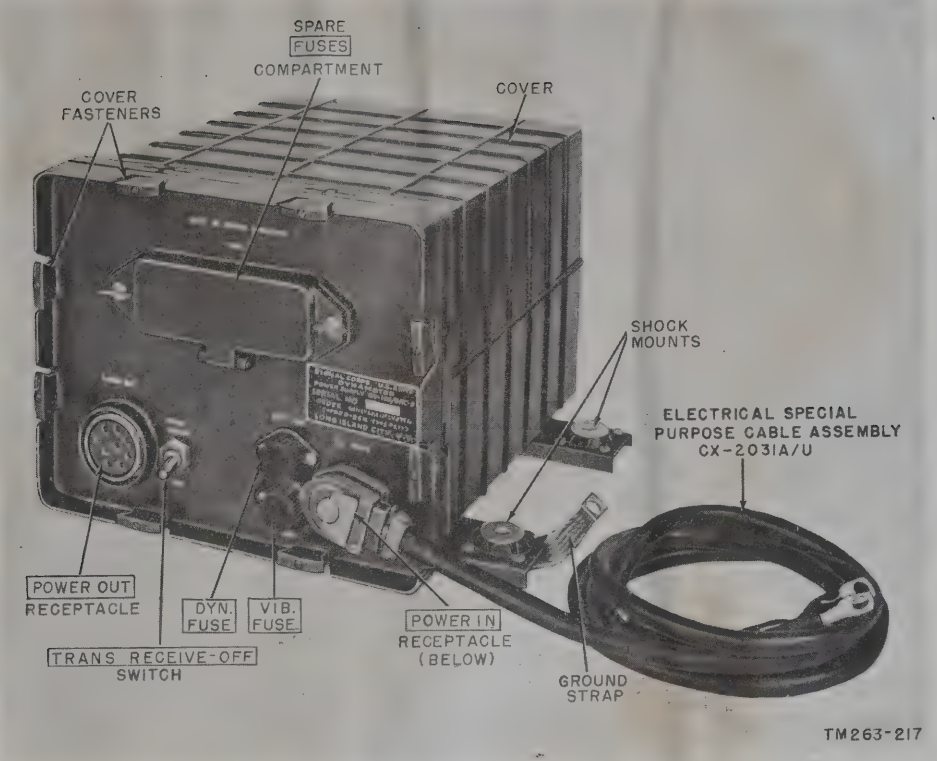

Figure 12. Dynamotor-Power Supply DY–105/GRC–9X.

14. Description of Generator GN–58–(*) (fig. 13).

The generator power supply stands upright on three legs (fig. 33), which are removed when the unit is transported or stored. The seat is fastened to the rectangular-shaped leg, which sets in between the two hand cranks. The hand cranks are inserted into the holes provided for on each side of the unit. A plate secured by a thumbscrew covers the receptacle for protection against dirt and moisture when the cord is not connected.

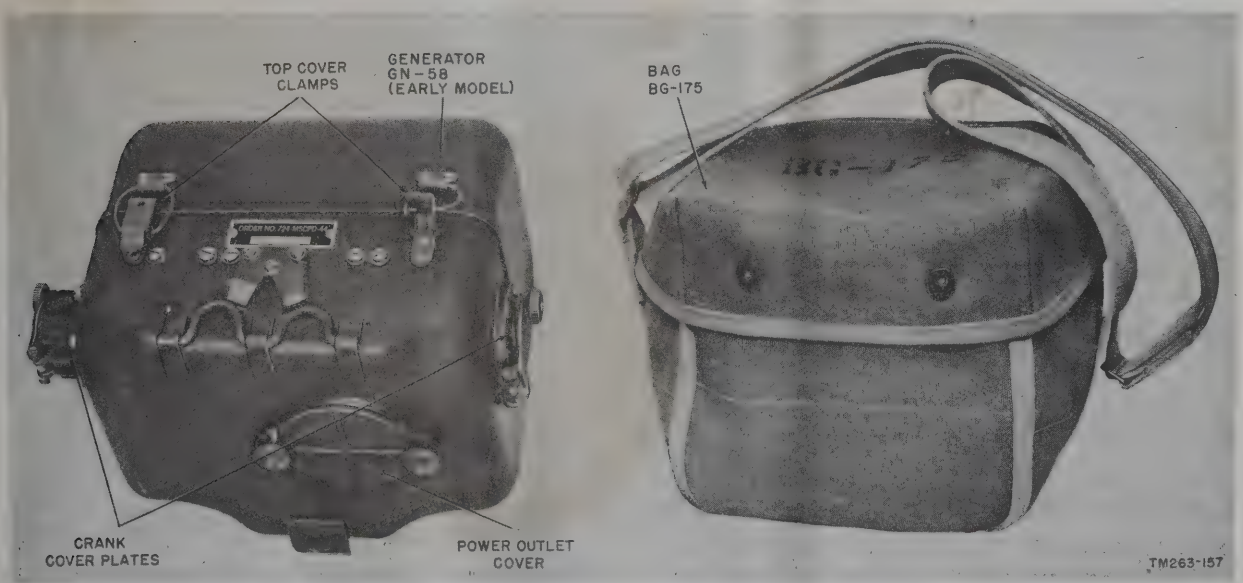

Figure 13. Generator GN–58–(*) and Bag BG–175.

15. Description of Antenna Components

a. Antenna AT–101/GRC–9 (fig. 19) is a straight stranded copper wire, 107½ feet long, sectionalized by eight ceramic insulators and eight sets of jumpers. This long-wire antenna may be readjusted to any required frequency between 4,300 and 12,000 kilocycles (kc) by opening and closing these jumpers (figs. 20 and 21) as indicated on the antenna chart attached (figs. 19 and 20).

b. Antenna AT–102/GRC–9 (fig. 19) is also sectionalized by eight ceramic insulators and eight sets of jumpers. This long-wire antenna is added to Antenna AT–101/GRC–9 to cover the frequencies between 2,000 and 4,300 kc. Both Antennas AT–101/GRC–9 and AT–102/GRC–9 are supplied and, when not in use, are stored on Reels RL–29. Halyards M–379 and M–378 are lengths of rope with an insulator at one end to secure the antenna between supports.

c. The whip antenna consists of five sections of metal tubing. These sections are screwed together to form the whip antenna and can be used in vehicular (fig. 39) or in ground (fig. 23) installations.

d. Counterpoises CP–12 and CP–13 (fig. 24) are fitted together forming a radial network of eight wires and placed on the ground (fig. 23) beneath the whip antenna. They are made up of heavy, flexible, rubber-covered wires.

e. When horizontal mounting of the receiver-transmitter is desired, a small metal bracket, Bracket FT–515, is used to hold the whip antenna. A wingnut secures the bracket to the receiver-transmitter case (fig. 26).

16. Description of Loudspeakers

a. Loudspeaker LS–7 (fig. 5). This speaker is of the permanent magnet type with a 4-inch cone. A self-contained output transformer matches loads of 4,000-ohms impedance.

b. Loudspeaker LS–7A. This loudspeaker is blastproof and immersion-proof, which insure reliable operation of the radio set under adverse operating conditions. Loudspeaker LS–7–A is electrically equivalent to Loudspeaker LS–7 and performs the same function when used with other equipment described in this manual .

c. Permanent Magnet Loudspeaker LS–203/U. This speaker is interchangeable with the loudspeakers described above. Permanent Magnet Loudspeaker LS–203/U is exactly the same electrically and mechanically as Loudspeaker LS–7–A.

17. Description of Power Cords

a. Cord CD–1119. Cord CD–1119 (fig. 42) is a 4-conductor cable that carries power from the battery power supply receptacle to the receiver-transmitter BATTERY receptacle.

b. Cord CD–1086. Cord CD–1086 (fig. 42) is an 8-conductor cable with a neoprene outer jacket. A copper shield wire forms a ninth conductor. The plugs come with coupling rings for securing them to their receptacles. The cords are used to carry power from any of the power supplies furnished (except the battery power supply) to the POWER receptacle on the receiver-transmitter.

18. Description of Mounting MT–350/GRC–9 (fig. 4)

The mounting is made of metal and is shaped like an open shallow rectangular box large enough to house the radio set. Six leather straps secure the transmitter-receiver sections to the mounting bracket (fig. 36).

19. Description of Carrying Bags

Four carrying bags are provided for transporting the equipment. They are of olive drab color and are constructed of heavy canvas. Leather straps are provided for ease of carrying the equipment. The contents of Bag BG–175 (figs. 4 and 13), Bag BG–172 (figs. 4 and 5), Roll BG–174 (figs. 4 and 6), and Bag CW–140/GRC–9 (fig. 42) are described in paragraph 7.

20. Description of Key J–45

The key (fig. 5) with all the important parts listed is shown in figure 159.

21. Running Spares

The chart below lists the running spares for the radio set.

Component	Description	Running spares
Roll BG–174 (fig. 6)	Mast Section MS–116 or MS–116–A	3
	Mast Section MS–117 or MS–117–A	1
	Mast Section MS–118 or MS–118–A	1
Box BX–53 (fig. 7)	Tube type OC3	1
	Tube type 1S5	1
	Tube type 1L4	1
	Tube type 1R5	1
	Tube type 2E22	1
	Tube type 3A4	1
	Tube type 3Q4	1
	Lamp, pilot, Mazda No. 49	2
	Lamp, neo, Mazda No. NE–47	1
Generator GN–58–(*) (fig. 126)	Brush set containing: Pair of 6-volt brushes Pair of 425-volt brushes	1
Power Supply PP–327(*)/GRC–9Y (refer to TM 11–5070 for the running spares).		
Vibrator Power Supply PE–237 (spares located in vibrator case).	Tube type 1005	1
	Tube type 1006	1
	Vibrator (heavy-duty)	1
	Vibrator (standby)	1
or		
Dynamotor-Power Supply DY–88/GRC–9 (figs. 11 and 144) or DY–105/GRC–9X (figs. 12 and 146).	Brush set, containing a pair of 6-volt brushes[a]	1
	Brush set, containing a pair of 12-volt brushes[a]	1
	Brush set, containing a pair of 24-volt brushes	1
	Brush set, containing a pair of 580-volt brushes.	1
	Cartridge fuses:	
	3 amperes at 250 volts[b]	3
	5 amperes at 125 volts[a]	3
	10 amperes at 32 volts	3
	20 amperes at 32 volts[a]	3
	30 amperes at 32 volts[a]	3
	Vibrator	1
	Thermal resistor (ballast tube) for standby operation.	1
	Thermal resistor (ballast tube) for heavy-duty operation.	1

[a] Dynamotor-Power Supply DY–88/GRC–9 only.
[b] Dynamotor-Power Supply DY–105/GRC–9X only.

22. Additional Equipment Required

The following equipment is not supplied as part of Radio Set AN/GRC–9(*) but is required for use with the radio set.

a. Battery BA–48. Used in field operation.

b. Vehicular Storage Battery. A 6-, 12-, or 24-volt battery required for Vibrator Power Supply or Dynamotor-Power Supply DY–88/GRC–9. A 24-volt battery only, is required for Dynamotor-Power Supply DY–105/GRC–9X.

c. Microphone T–17 or Microphone T–45 (figs. 14 and 50). Used for modulation of the transmitter. These microphones are part of the installation kit required for field operation.

d. Doublet Antenna. Used in ground installations. Refer to paragraph 31 for the description of this antenna.

e. Headset HS–30–(*) or H–16/U. Used for headset reception. Figure 47 shows Headset HS–30–(*) in use. The headset is part of the installation kit required for field operation.

f. Crystal Kit CK–4/GRC–9. This kit contains 4,470 Crystal Units CR–8/U, covering a frequency range from 1,000 kc to 6,000 kc, which

are used in the transmitter of the radio set. Five Cases CS–140 are used for storing and transporting the crystals. Ten crystals are supplied for each frequency between the 1,000-kc to 6,000-kc range as follows:

(1) From 1,000 kc to 1,800 kc, the crystals are supplied in 5-kc steps.

(2) From 1,810 kc to 6,000 kc, the crystals are supplied in 10-kc steps.

Note. In earlier models, Crystal Units CR–2B/U were used.

g. Power Units PE–162A, PE–162B, and PE–162–C. These power units can be used in place of Generator GN–58–(*) in ground installations. They are lightweight gasoline-engine-driven generators of a manual-starting type, having an electrical output of 150 watts at dc voltages of 6.2 and 500 volts. For further information refer to TM 11–971.

h. Installation Kits for Vehicular Operation. A list of the installation kits that can be used with the radio set and their stock numbers are given in the chart below.

Type of vehicle	Stock No. Installation unit
Carrier, Cargo, Amphibious, M76 (T46E1).	2S12–9–V129–1/5
Carrier, Personnel, Half Track, M3A1.	2S2501–9–V68/50
Carrier, Personnel, Half Track, M3A1.	2S2501–9–V68–1/5
General Purpose	2S2501–9/50
Landing Vehicle Tracked, LVT–4 (Army Only).	2S2501–9–V89–50
Truck, ¼ Ton, 4 x 4, Utility, M38, M38A1.	2S2501–9–V76/50
Truck, ¼ Ton, 4 x 4, Utility, M38, M38A1.	2S12–9–V76–1/50
Truck, ¾ Ton, 4 x 4, Cargo, M37 or Truck, ¾ Ton, 4 x 4 Command, M42.	2S2501–9–V74/50
Truck, ¾ Ton, 4 x 4, Cargo, M37 or Truck, ¾ Ton, 4 x 4 Command, M42.	2S12–9–V74–2/50
Truck, ¾ Ton, 4 x 4, Cargo, M37 or Truck, ¾ Ton, 4 x 4 Command, M42.	2S12–9–V74–3/50
Truck, 2½ Ton, 6 x 6, Cargo, M34, M35, M135, M211.	2S2501–9–V56/50
Vehicle, Recovery, Medium, M74	2Sis–9–V137–1/5

i. General Installation Kit. Stock number 2S2501–9/50 is used to order this kit.

j. Power Supply PP–327(*)/GRC–9Y. A 115- or 230-volt ac power source is required.

Figure 14. Microphone T–17.

23. Differences in Models

a. Radio Set AN/GRC–9(*). The radio sets differ in nomenclature by the power supplies furnished. Refer to the table given in paragraph 4 for the differences in models.

b. Receiver-Transmitter RE–77(*)/GRC–9. Most of the models of the receiver-transmitter are identical in physical appearance. In models bearing serial numbers 10101 and over, the positions of keying relay K101 and capacitors C128A, C128B, and C128C are interchanged. In early models, the screen circuits of tubes V1 and V3 are connected together and are not under the control of R.F. GAIN control Ⓟ when operation switch Ⓛ is set in NET position. In later models, the screen grid of tube V1 is controlled by the R.F. GAIN control for all positions of control Ⓛ. There also have been some small changes in component values. In addition, models starting with serial number 12100 include temperature-compensating oscillator-coil capacitors (par. 101*f*). Receiver-Transmitter marked "Receiver-Transmitter RT–77A/GRC–9" indicate those equipments that use a new type bias cell holder, which permits the use of a plug-in style battery. More detailed information on the bias cell holder is given in paragraph 32*a*(8). A lock is also provided on control Ⓒ in later models to prevent

detuning of the transmitter. For modification of early models, refer to the note in paragraph 25*b*.

c. Generator GN–58–(*). Several changes have been made in the various models and these are described in paragraph 127. Generator power supplies bearing serial numbers 10101 and over are illustrated in figures 126 through 129.

d. Vibrator Power Supply PE–237. The changes in this power supply are described in paragraph 125.

e. Loudspeaker LS–7–A. Radio sets on Order No. 15170–Phila–52 bearing serial numbers 1 through 2501, are supplied with Loudspeaker LS–7–A (fig. 158). On Order No. 10560–Phila–55, Permanent Magnet Loudspeaker LS–203/U, is issued in place of Loudspeaker LS–7–A.

CHAPTER 2
INSTALLATION

Section I. SERVICE UPON RECEIPT OF RADIO SET AN/GRC–9(*)

24. Unpacking

a. Packaging Data. When packaged for shipment, the components of Radio Set AN/GRC–9(*) are placed in moistureproof containers and packed in three wooden crates. A packing slip contained in a moistureproof inclosure is stapled to crate No. 1 and lists the contents for each of the three crates. The method of packing a typical component is shown in figure 17. The size, volume, weight, and contents of each crate are given in the following chart.

Crate No.	Width (in.)	Depth (in.)	Height (in.)	Volume (cu ft)	Unit weight (lb)	Contents
1 of 3	25	15½	16⅝	3.7	79	Receiver-Transmitter RT–77(*)/GRC–9. Panel Cover CW–109/GRC–9. Manuals Cord CD–1119 Bag CW–140/GRC–9
2 of 3	47¾	21	12⅝	7.6	142	Bag BG–172 and contents Roll BG–174 and contents Bag BG–174 and contents Generator GN–58–(*) Mast Base MP–65 Mounting M8–350/GRC–9 Hardware kit
3 of 3	15½	15½	12	1.6	69	Dynamotor-Power Supply DY–88/GRC–9. Electrical Special Purpose Cable Assembly CX–2031/U or CX–2031A/U. Cord CD–1086 Hardware kit
or 3 of 3	15½	15½	12	1.6	72	Dynamotor-Power Supply DY–105/GRC–9X. Electrical Special Purpose Cable Assembly CX–2031/U or CX–2031A/U. Cord CD–1086 Hardware kit
or 3 of 3	26⅝	19½	14⅞	4.6	138	Vibrator Power Supply PE–237 Cord CD–1086 Hardware kit
or 3 of 3						Power Supply PP–237(*)/GRC–9Y (refer to TM 11–5070).

b. Removing Contents. Equipment may be shipped in packing cases (fig. 16) or in its own carrying bags. When new, used, or reconditioned equipment is received, select a location where it may be unpacked without exposure to the elements. No special unpacking and uncrating procedures are necessary for equipment shipped in the carrying bags. General instructions for unpacking the wooden crates are given below.

Note. Be careful in uncrating, unpacking, and handling the equipment; it can be damaged. Avoid thrusting tools into the containers because damage to the equipment may result. If it becomes damaged or is left exposed to the elements, the equipment might be rendered useless and a complete overhaul might be required.

(1) Cut the steel straps at a point just below the box covers and fold them back (fig. 15).

(2) Remove the nails with a nail puller (E, fig. 16). Remove the top of the packing case. Do not attempt to pry off the sides and top; the equipment may be damaged.

(3) Remove the waterproof barrier wrapped around the corrugated cardboard cartons (B, fig. 16).

(4) Open the cardboard box covers and carefully remove the packaged equipment. Cut through the upper three edges of the carton. The uncut edge will act as a hinge. If heavy wrapping paper is used around the equipment instead of the cardboard containers, remove it carefully and take out the components.

(5) If the vibrator power supply is contained in the packing case, take off the four bolts that hold the mounting base of the vibrator power supply to the packing case skids (fig. 15), and lift it from the case.

(6) Remove the moisture-vaporproof barrier as shown in C, figure 16.

(7) Open the inner carton and remove the equipment (D, fig. 16) from its packaging and place it on the operating table or the workbench.

Note. Save the original packing cases, packaging materials, and container. They can be used again when the equipment is repacked for storage or shipment.

25. Checking

a. New Equipment.

(1) Check the contents against the master packing slips. Paragraph 7 lists the contents of the carrying bags. Use it for checking to be sure that all components are present.

(2) Inspect the equipment for possible damage (incurred during shipment) such as bent knobs and cracked or broken dial windows. Refer to paragraph 32 for renewal and replacement of Panel Cover CW–109/GRC–9.

(3) Rotate the controls and turn the switches for smoothness of operation. Binding or jamming indicates abnormal mechanical operation. Do not force the controls because this may cause permanent damage.

(4) Tuning controls Ⓘ, Ⓒ, and Ⓝ have locks on them. Be sure they are unlocked before attempting rotation of the knobs. Some knobs have a white line on only one side of their centers while other knobs have a white line on both sides of their center. Knobs that have two white lines indicate that the control can be rotated in either direction continuously without stopping. Knobs with one white line cannot be turned continuously in one direction, but when reaching the stop position, they must be rotated back in the opposite direction. A knob with one white line must never be forced beyond the stop position or it will break.

(5) ANT. SELECTOR switch knob Ⓐ and XTAL–MO–BAND switch knob Ⓕ each have a single indexing mark and will fit their respective shafts in one of two possible positions 180° apart. If it is necessary to remove these knobs, be sure to note the position of the knobs with respect to their panel markings. Improper operation of the equipment will result if either or both knobs are replaced incorrectly.

(6) Look for bent pins on the cords and receptacles. Refer to paragraph 26 for special instructions pertaining to Cord CD–1086.

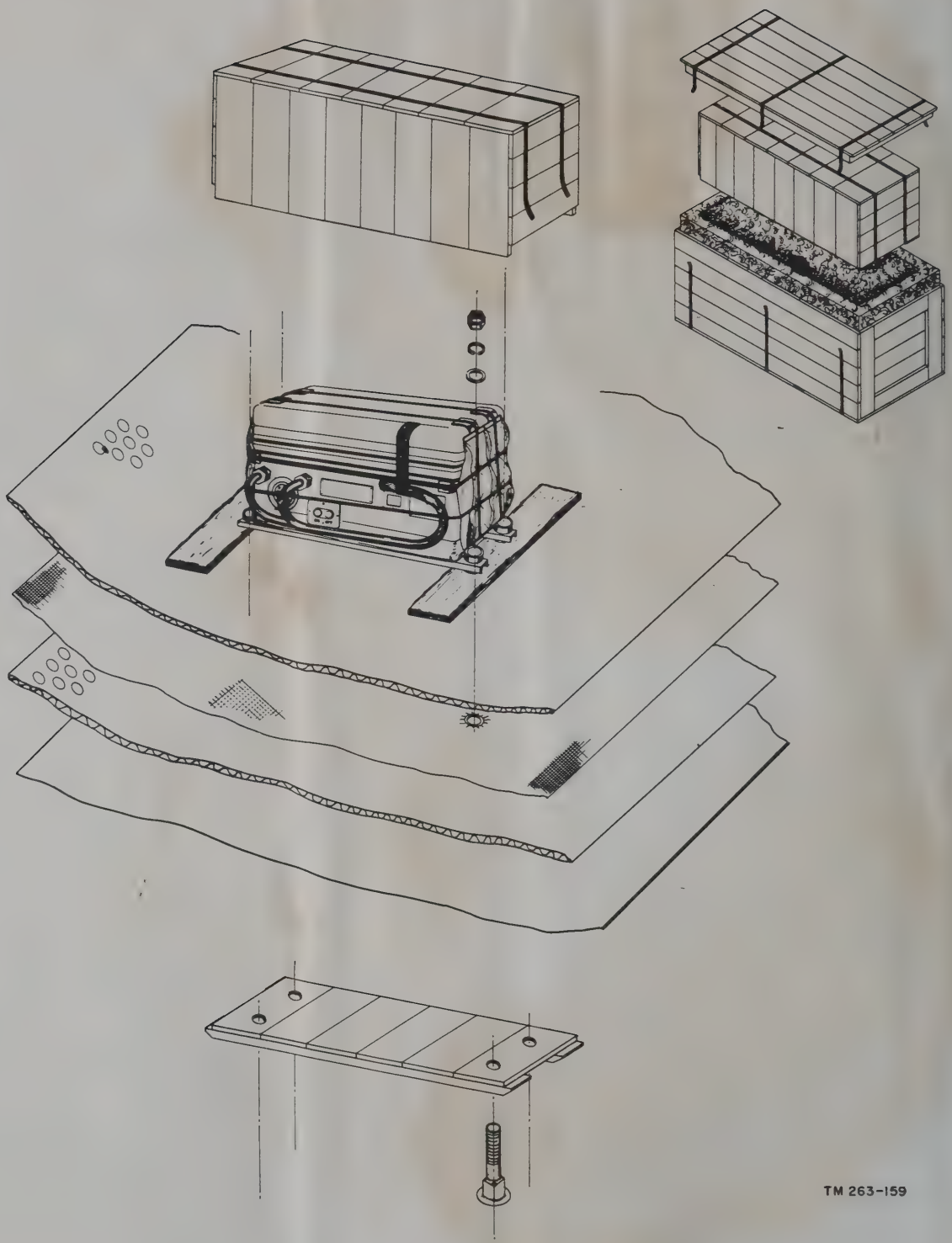

Figure 15. Method of packing typical component for shipping.

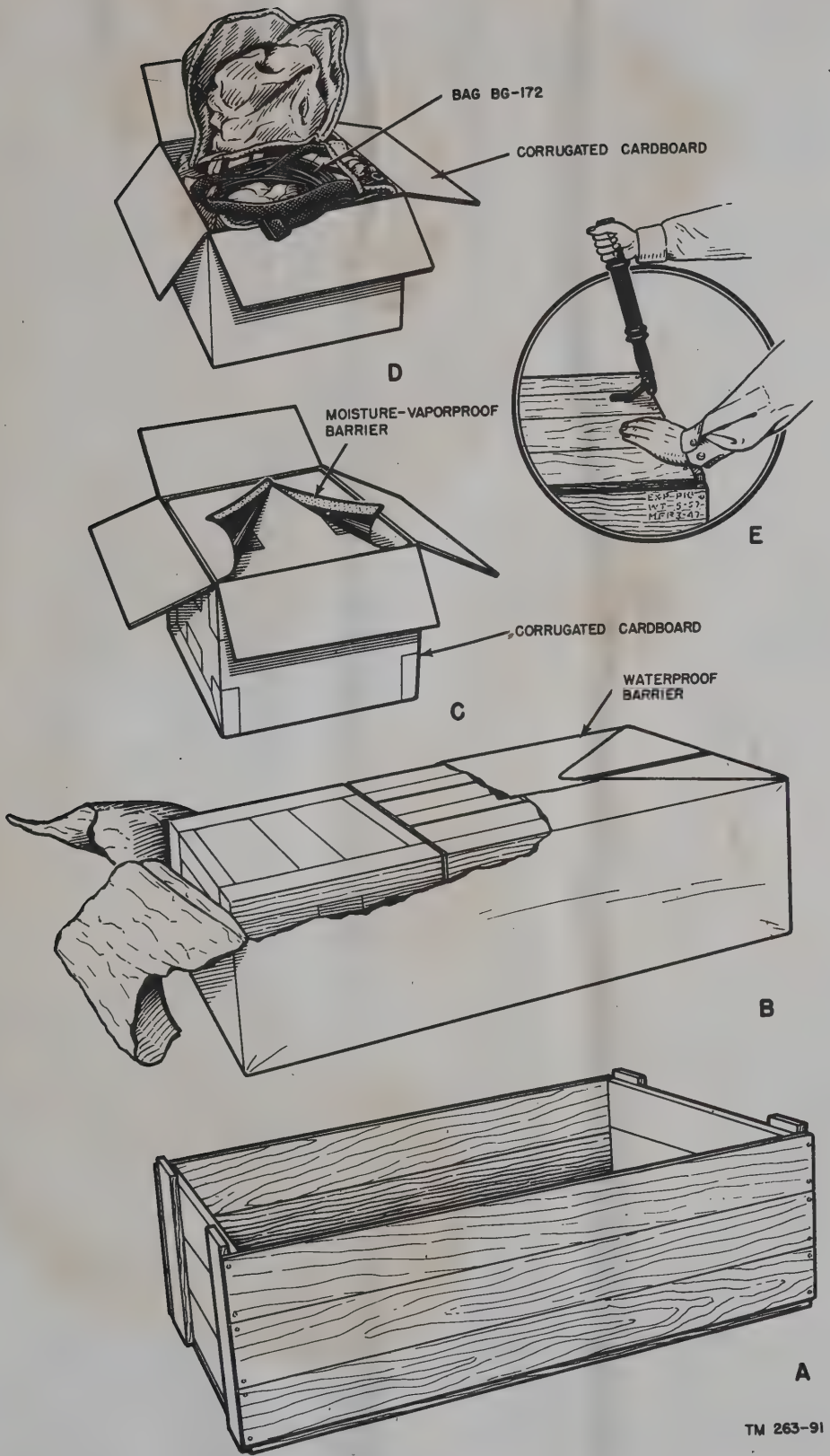

Figure 16. Typical packaging of Radio Set AN/GRC–9 (*) components.

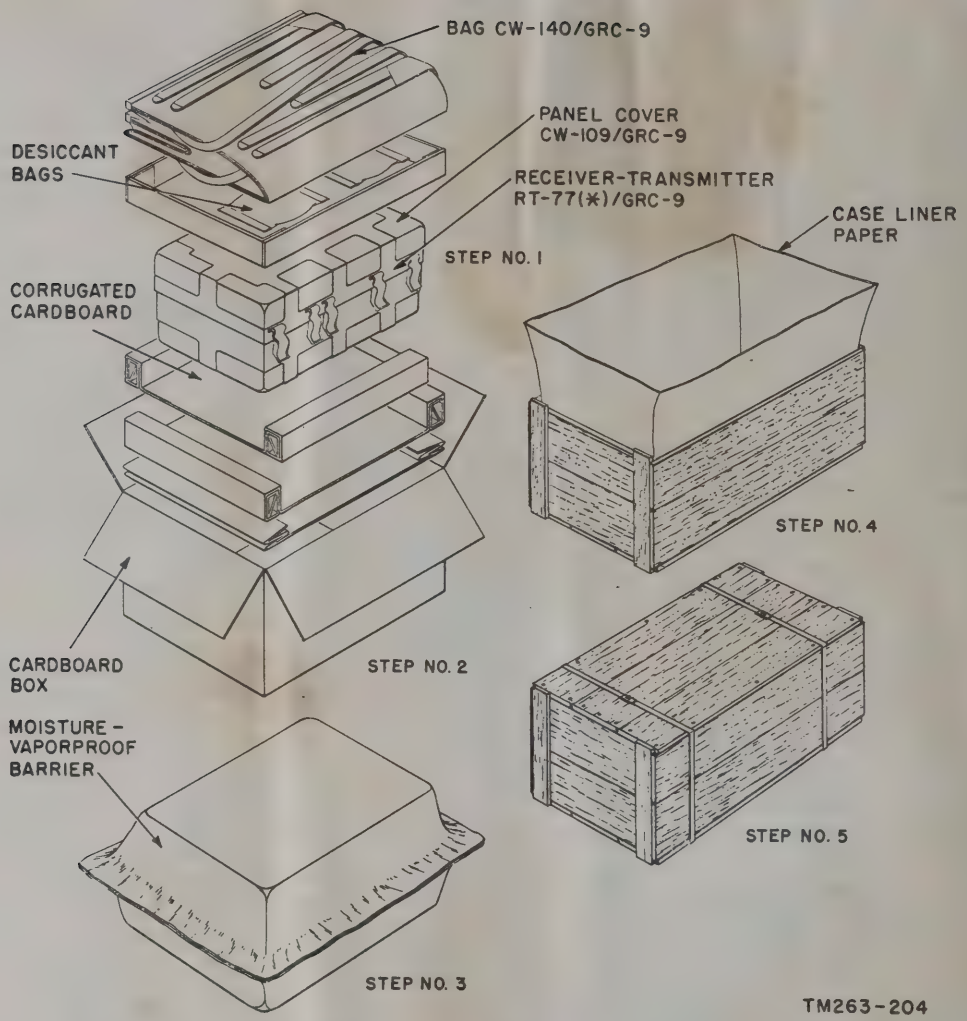

Figure 17. Method of packaging receiver-transmitter section.

(7) Remove the fuses on the dynamotor power supplies and check to see that they are of the proper rating. Be sure that the fuses are seated firmly after replacing them.

Caution: To avoid serious damage to the equipment, do not use any fuse rated above the value specified.

(8) Check the running spares for damages.

b. Old Equipment. Perform the instructions as given in *a* above, as well as the following:

(1) Check the equipment for tags, MWO markings, or other indications pertaining to changes in the wiring or operation of the equipment. If any changes in wiring have been made, note the change in the appropriate section of this manual. Be sure to change the main schematic diagram so that it agrees with the equipment received.

(2) When checking the operating controls for ease of rotation, if lubrication is required, refer to the lubrication instructions in paragraphs 72 through 74.

(3) Inspect all the cables for possible internal or external damage and repair those that might appear to give trouble later.

Note. To prevent detuning of Receiver-Transmitter RT–77/GRC–9 caused by shock and vibration, refer to MWO SIG 11–263–3, Modification of Radio Set AN/GRC–9 to Prevent Detuning of Receiver-Transmitter RT–77/GRC–9 Antenna Tuning Coils Due to Shock and Vibration.

26. Inspection and Repair of Cord CD–1086

a. General. A number of Cords CD–1086, part of Radio Set AN/GRC–9(*) procured on Order No. 3143–Phila–51, have been found to be defective. Because there are no markings on the cords to indicate the name of the manufacturer or the order number, all Cords CD–1086 should be checked after unpacking. Failure to check all new cords may result in damage to tubes or other components in the power supply. The defects are:

(1) Ground of cable shield connected to pin 57 instead of pin 53 in Plug PL–279 (A, fig. 54).

(2) Cable shield not dressed properly at ends, resulting in the sharp edges of the shield cutting into the cable conductors.

(3) Cable connector inserts cracked or split.

b. Procedure of Repair.

(1) Remove the screws that hold the bottom cover to Plug PL–279 and remove the cover.

(2) Remove the flathead screw located on the side of connector shell that holds the connector insert in the shell, and push the insert out of the connector shell.

Note. If the connector insert is cracked or split, replace the complete connector.

(3) Remove the tape or other covering at the end of the cable.

(4) Check the positions of the leads on the cable insert in accordance with the internal wiring diagram for Cord CD–1086 (A, fig. 54).

(5) Unsolder the leads and change them to their proper positions; resolder the changed connections.

(6) Check the end of the cable shield to make certain that the shield is not cutting into the leads.

(7) If necessary, turn back the cable shield and insulate the leads with electrical insulating tape.

(8) Dress the shield back over the tape; this will serve as a base to prevent further damage to the leads.

(9) Reassemble the cable connector.

Note. On some cords, tape is used as a shim under the cable clamp. Replace this tape if necessary.

(10) Check the remaining cable connector (Plug PL–294) in a similar manner.

Section II. SELECTION OF SITE AND ANTENNA

27. Siting
(fig. 18)

a. One of the most important factors to assure satisfactory transmission and reception of radio signals is the location of the antenna. The transmitter and receiver will have a greater range if the antenna is located in a position which is high and clear of hills, buildings, cliffs, densely wooded areas, and other obstructions. Dips, depressions, valleys, and low places are poor for radio transmission and reception. Weak signals may be expected if the radio set is operated close to steel bridges, underpasses, or near power lines or power circuits.

b. The most desirable locations for transmission and reception are hilltops, elevations, and slight rises of ground. Flat terrain also is good. As a general rule, transmission is better over water than over land. When selecting a flat site, remember that tall objects must be available for fastening the antenna if the long wire or doublet antenna is used.

Note. In ground installations, the whip antenna will require a circle of flat ground approximately 30 feet in diameter, and the supports for the long wire antenna should be spaced approximately 265 feet apart.

c. Maximum range can be expected when operating on top of a hill or knoll. Do not operate the radio set in a valley because the set will have a shorter range.

28. Selection of Antenna

Most satisfactory performance will be obtained with the selection of the proper antenna, considering the advantages and the disadvantages of each of the two antennas issued with the radio set. The advantages and disadvantages of the doublet antenna (not issued) are also given.

a. Long-Wire Antenna. When a semipermanent installation is made, use the long-wire antenna. It will transmit farther and receive weak

Figure 18. Siting.

signals (over comparatively long distance) more satisfactorily than the whip antenna.

(1) The principal advantage of the long-wire antenna (when properly installed) is its transmission and reception efficiency.

(2) The principal disadvantages of the long-wire antenna are:

(*a*) It requires tall objects for support.

(*b*) The antenna length must be changed if the frequency is to be shifted appreciably (more than 200 kc).

(*c*) The direction of maximum transmission with respect to the orientation of the antenna will depend on the length of the antenna.

b. Whip Antenna. When the equipment must be moved rapidly and frequently from one location to another or is used as a vehicular installation, use the whip antenna.

(1) The advantages of the whip antenna are:

(*a*) It can be set up or taken down quickly.

(*b*) It will permit satisfactory transmission and reception over short distances (up to approx. 25 miles).

(*c*) The space required is small.

(*d*) The presence of tall objects for support is not required.

(*e*) It permits transmission equally well in all directions.

(*f*) The antenna can be quickly tuned from one end of the frequency band to the other.

(2) The principal disadvantage of the whip antenna is that it is not highly efficient for distances over 25 miles.

c. Doublet Antenna. Sometimes the radio set must be used as a semipermanent installation to hold communication with other sets located in a fixed direction from the first set. In this case, a doublet antenna is preferred because of its greater directivity when operated as a half-wave antenna.

(1) The principal advantage of the doublet antenna is that communications will be more reliable because of the high directivity of the antenna.

(2) The principal disadvantages of the doublet antenna are:

(*a*) It requires tall objects for support.

(*b*) The antenna length must be changed if the frequency is to be shifted appreciably (refer to the chart given in par. 31*b*).

(*c*) The direction of maximum transmission and reception depends upon the orientation of the antenna (fig. 27) in respect to the station being worked.

Section III. INSTALLATION OF ANTENNAS FOR GROUND USE

29. Long-Wire Antenna (fig. 19)

For installation of Antennas AT–101/GRC–9 and AT–102/GRC–9, proceed as follows:

a. Select an open area where two upright supports, such as two trees, can be found. A minimum length of 250 feet is required to allow for the full length of the antenna at the low frequencies.

b. Making use of trees, buildings, or fence posts, erect the antenna as high as possible. In no case should the antenna be lower than 6 feet.

c. Connect Antenna AT–101/GRC–9 to its support by means of Halyard M–379 as shown in figure 20.

Note. Some antennas were wired incorrectly and require the addition of jumper wires. Refer to MWO SIG 11–263–2, Modification of Radio Set AN/GRC–9 to Correct Error in Production of Antenna AT–101/GRC–9.

d. Connect the clip on Antenna AT–102/GRC–9 to the small ring on the free end of Antenna AT–101/GRC–9 and fasten the other end of Antenna AT–102/GRC–9 to its support by Halyard M–378.

e. The lead-in should not touch the ground or any other objects such as trees, buildings, or metal fences. Connect the lead-in from the antenna chart end of the antenna to the ANT. binding post on the transmitter front panel.

Note. As the antenna length, for the best transmission and reception, is directly dependent on the frequency of the signal, it is necessary to adjust the antenna length to the frenquency at which the transmitter is to be operated. Jumpers are placed on the antenna (fig.

20). The antenna chart, showing the length of the antenna required for the various frequencies, indicates which jumpers must be opened and closed for the frequencies. A typical jumper is shown in figure 21.

f. In case the antenna chart should be lost or become illegible, refer to the chart given in figure 22. The number of antenna lengths to be closed in succession should always start at the lead-in end.

g. If the antenna should be lost or destroyed, another one can be made from field wire WD–1. The following chart gives the correct lengths *including the lead-in.*

Transmitting frequency (kc)		Antenna length, including lead-in (ft)
From—	*To—*	
2,000	2,200	245.5
2,200	2,400	228.0
2,400	2,550	210.0
2,550	2,700	193.0
2,700	2,900	177.5
2,900	3,100	163.0
3,100	3,200	151.5
3,200	3,900	139.0
3,900	4,300	122.0
4,300	4,900	107.5
4,900	5,300	93.0
5,300	6,000	85.5
6,000	7,500	73.5
7,500	8,400	63.0
8,400	9,000	57.5
9,000	9,900	53.0
9,900	12,000	46.0

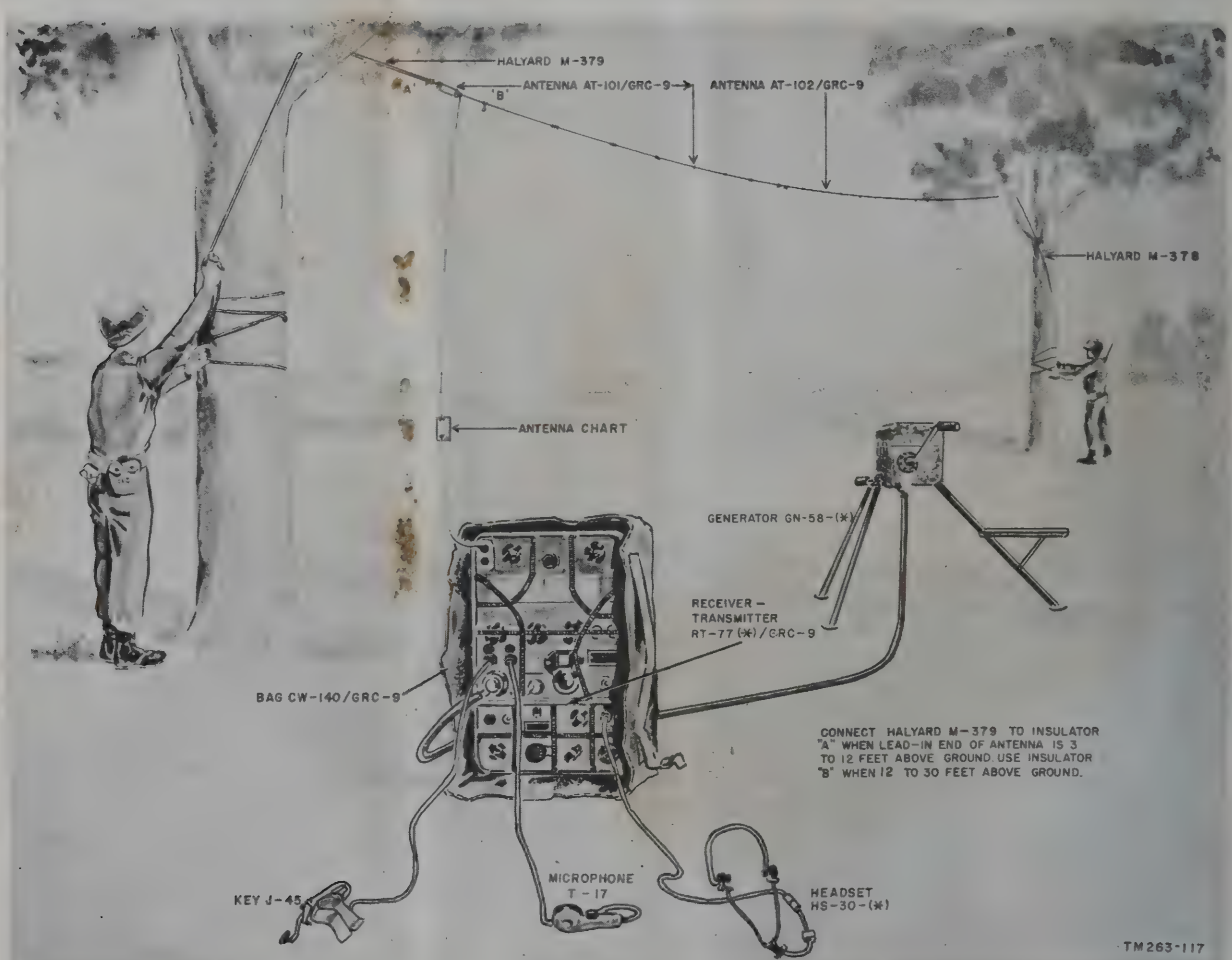

Figure 19. Installation of antennas AT–101/GRC–9 and AT–102/GRC–9.

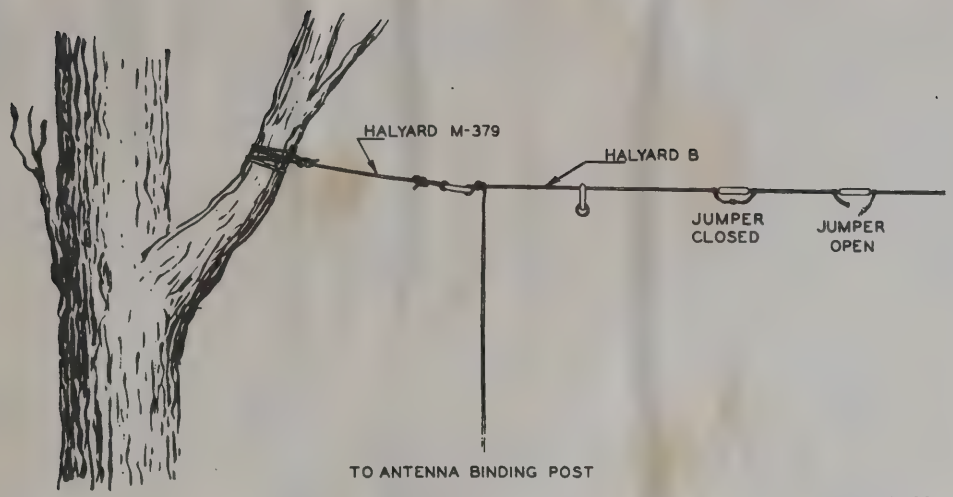

Figure 20. Antenna supports and connections.

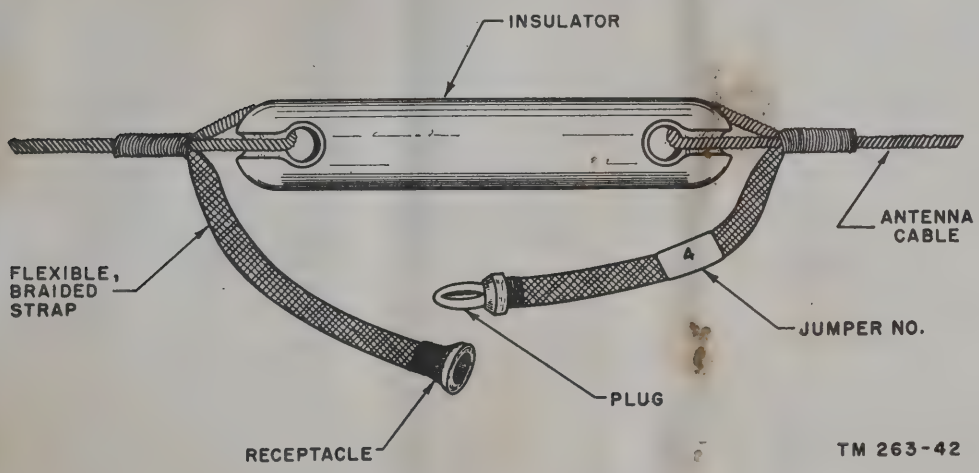

Figure 21. Typical antenna jumper.

30. Whip Antenna (fig. 23)

a. Place the radio set in an area away from large obstructions such as trees, buildings, and power lines.

b. Set up the counterpoise by placing link Counterpoise CP–13 on top of Counterpoise CP–12; clamp them together with the wingnut attached (fig. 24).

c. Spread out the eight wires of Counterpoises CP–12 and CP–13 as far as they will reach radially, like the spokes of a wheel. To hold the counterpoises in place, drive Stake GP–27–A through one of the holes in the connecting links. Connect the heavy lead on the bar of Counterpoise CP–12 to the GND. post on the receiver panel.

d. Extend the hinged supports (fig. 26) on the side of the radio set case through the opening in the side of Bag CW–140/GRC–9. Insert Insulator IN–127 in these supports.

e. Connect a 12-inch length of Wire W–128 between the ANT. binding post on the transmitter and the connector on Insulator IN–127. Run the wire through the upper hinge slot in the bag.

f. Close the clamp ring of Guy GY–42 (fig. 25) and hook the end of Guy GY–12 (fig. 23) through the holes in the collar clamps to keep the clamps closed. Insert Mast Section MS–116–A into Insulator IN–127.

g. Slip Stakes GP–27–A or GP–27–B through the S-hooks attached to the ends of the guy cords and drive the stakes into the ground at equally

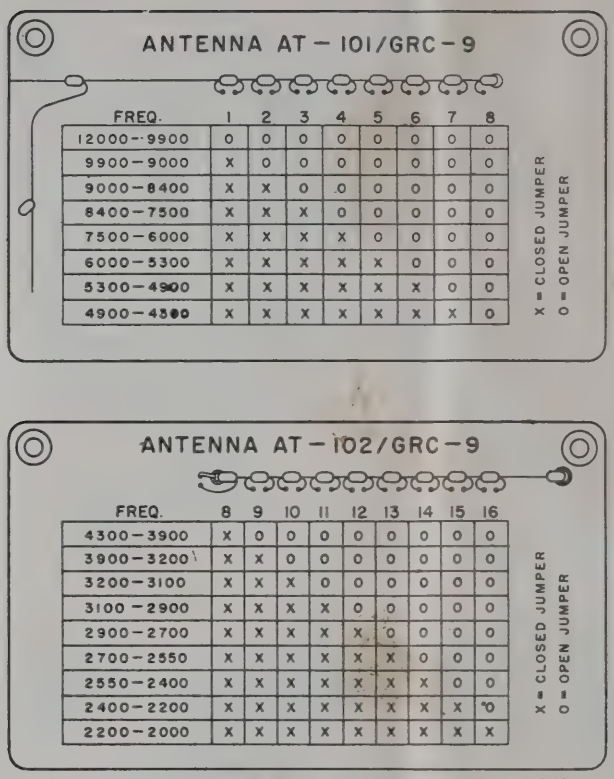

ANTENNA AT – 101/GRC – 9

FREQ.	1	2	3	4	5	6	7	8
12000–9900	0	0	0	0	0	0	0	0
9900–9000	X	0	0	0	0	0	0	0
9000–8400	X	X	0	0	0	0	0	0
8400–7500	X	X	X	0	0	0	0	0
7500–6000	X	X	X	X	0	0	0	0
6000–5300	X	X	X	X	X	0	0	0
5300–4900	X	X	X	X	X	X	0	0
4900–4500	X	X	X	X	X	X	X	0

X = CLOSED JUMPER
0 = OPEN JUMPER

ANTENNA AT – 102/GRC – 9

FREQ.	8	9	10	11	12	13	14	15	16
4300–3900	X	0	0	0	0	0	0	0	0
3900–3200	X	X	0	0	0	0	0	0	0
3200–3100	X	X	X	0	0	0	0	0	0
3100–2900	X	X	X	X	0	0	0	0	0
2900–2700	X	X	X	X	X	0	0	0	0
2700–2550	X	X	X	X	X	X	0	0	0
2550–2400	X	X	X	X	X	X	X	0	0
2400–2200	X	X	X	X	X	X	X	X	0
2200–2000	X	X	X	X	X	X	X	X	X

X = CLOSED JUMPER
0 = OPEN JUMPER

TM 263-41

Figure 22. Long wire antenna chart.

spaced points around the set to hold the mast erect.

h. If it is necessary to operate the radio set in a horizontal position, Insulator IN–127 is mounted by means of Bracket FT–515 (fig. 26).

31. Doublet Antenna

a. The lead-in or feeder to the doublet antenna should be a 50- to 72-ohm transmission line, whose ends are attached to the ANT. and DOUBLET binding posts on the transmitter panel. A doublet antenna must not be used unless the exact locations of the other radio stations are known or there is enough room to swing the antenna around to determine its direction. The correct orientation is shown in figure 27. One of the two lobes is omitted for clarity. A doublet antenna transmits equally well in two directions, 180° apart, and has nulls, or near zero output positions, 90° from the maximums. The maximum lobes are about 50° wide for useful radiation, but the nulls are very sharp. This fact can be used to determine the direction of the wanted station. Listen to the wanted station while an assistant moves the antenna around until the station disappears; then permanently place the antenna in a position 90° from that position.

b. The following chart gives the antenna lengths necessary for maximum transmission efficiency over the frenquency range of Radio Set AN/GRC–9(*).

Frequency range (kc)		Antenna "L" in feet ¼ wave (each side of feeders)	Feeders length
From—	*To—*		
2,000	2,200	116 ft 7 in.	95 ft 6 in.
2,200	2,400	106 ft 6 in.	87 ft
2,400	2,575	98 ft	80 ft 6 in.
2,575	2,725	91 ft 10 in.	75 ft 6 in.
2,725	2,875	86 ft 10 in.	71 ft 6 in.
2,875	3,025	82 ft 3 in.	68 ft
3,025	3,150	78 ft 7 in.	65 ft
3,150	3,250	75 ft 10 in.	62 ft 6 in.
3,250	3,350	73 ft 6 in.	60 ft 6 in.
3,350	3,440	71 ft 7 in.	59 ft
3,440	3,520	69 ft 10 in.	57 ft 6 in.
3,520	3,600	68 ft	56 ft 6 in.
3,600	3,725	66 ft	54 ft 6 in.
3,725	3,850	63 ft 9 in.	53 ft
3,850	3,975	61 ft 8 in.	51 ft
3,975	4,100	59 ft 8 in.	49 ft 6 in.
4,100	4,225	57 ft 10 in.	48 ft
4,225	4,350	56 ft 3 in.	47 ft
4,350	4,475	54 ft 9 in.	45 ft 6 in.
4,475	4,600	53 ft 3 in.	44 ft 6 in.
4,600	4,725	51 ft 9 in.	43 ft
4,725	4,850	50 ft 6 in.	42 ft
4,850	5,000	49 ft	41 ft
5,000	5,150	47 ft 6 in.	39 ft 6 in.
5,150	5,300	46 ft	38 ft 6 in.
5,300	5,450	44 ft 8 in.	37 ft 6 in.
5,450	5,600	43 ft 3 in.	36 ft 6 in.
5,600	5,750	42 ft	35 ft 6 in.
5,750	5,900	40 ft 11 in.	34 ft 6 in.
5,900	6,100	39 ft 8 in.	33 ft 6 in.
6,100	6,300	38 ft 3 in.	32 ft 6 in.
6,300	6,500	37 ft	31 ft 6 in.
6,500	6,900	35 ft 10 in.	30 ft 6 in.
6,900	7,500	32 ft 10 in.	28 ft
7,500	8,100	30 ft 2 in.	25 ft 6 in.
8,100	8,700	28 ft	24 ft
8,700	9,300	26 ft	22 ft 6 in.
9,300	9,900	24 ft 4 in.	21 ft
9,900	10,500	23 ft	19 ft 6 in.
10,500	11,100	21 ft 10 in.	18 ft 6 in.
11,100	12,000	20 ft 3 in.	17 ft 6 in.

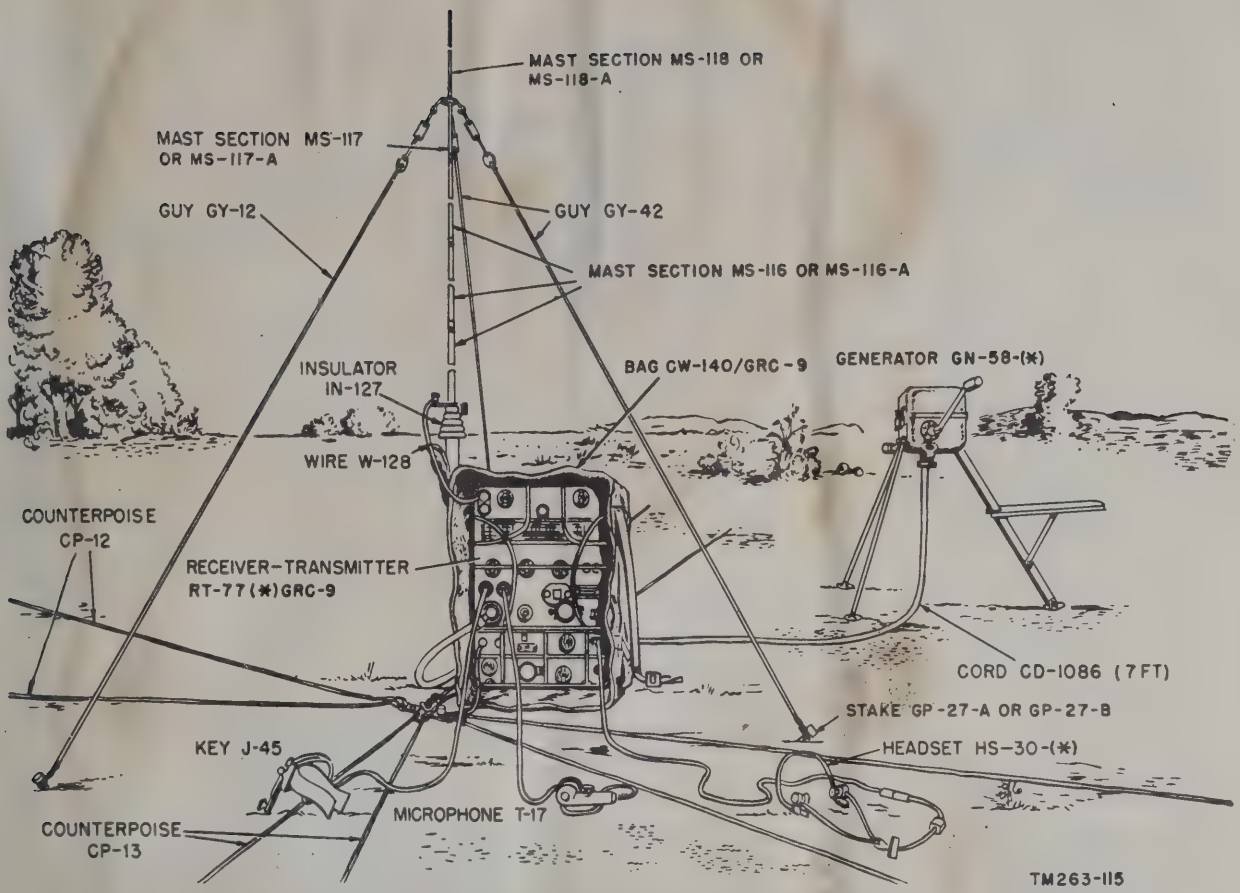

Figure 23. Typical ground installation, whip antenna.

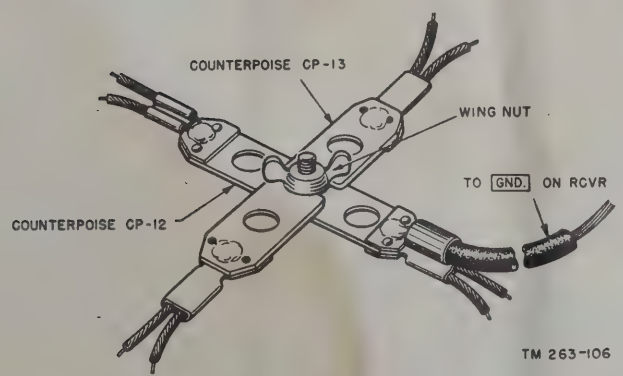

Figure 24. Counterpoises CP–12 and CP–13.

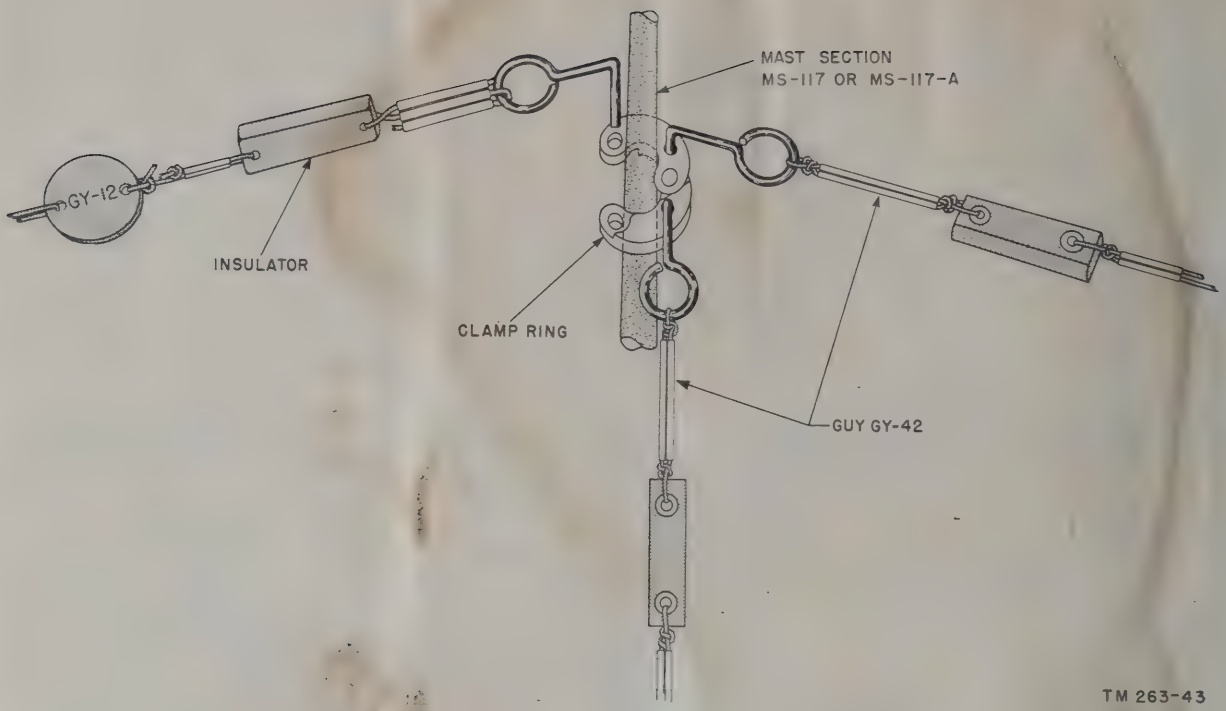

Figure 25. Clamp ring, in use.

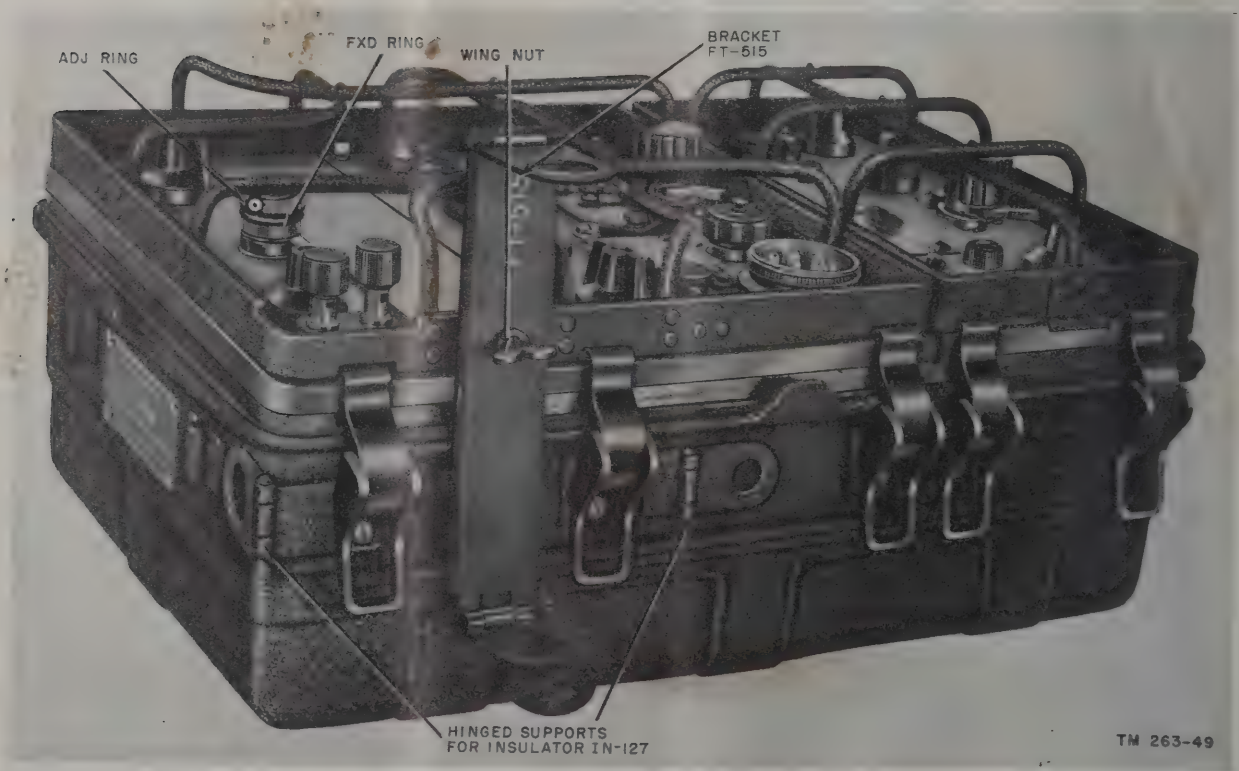

Figure 26. Bracket FT–515, in use.

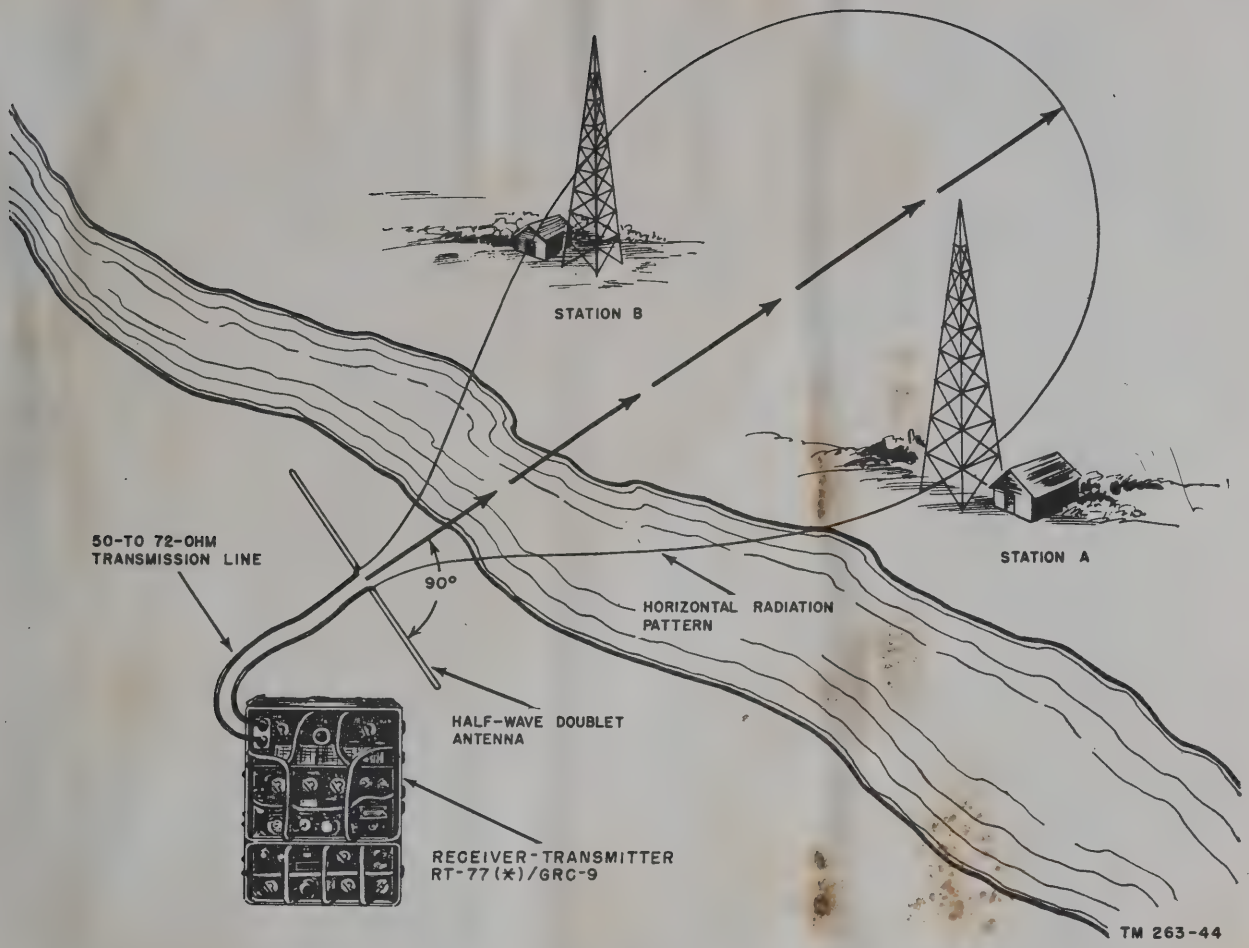

Figure 27. Orientation of half-wave doublet antenna for maximum range.

Section IV. GROUND INSTALLATION

32. Installation of Radio Set

a. Receiver Tubes and Crystal. The receiver tubes and crystal are already installed when shipped. To inspect or replace them, proceed as follows:

(1) Remove Panel Cover CW–109/GRC–9 from the receiver-transmitter in the following manner:

(*a*) Pull up gently but firmly on the metal latches arranged along the sides (fig. 28).

(*b*) Lift the cover straight up without tilting it. This is necessary to avoid any damage that may occur if the tube shields (fig. 30) are forced sideways, pushing any tube which is in the receiver, and causing the tube prongs to snap.

Warning: Be sure to release the latches in the manner shown in figure 28. Injury may result if the thumb is placed too close to the latch and it will be struck by the latch when released.

(2) Reset the latches (fig. 29) on the small projections on the transmitter front panel. This prevents the possiblity of the transmitter from falling out if the receiver-transmitter case is moved while standing in a vertical position.

(3) Lift the receiver section partially out of the case, remove the plug of the receiver-transmitter interconnecting cable

(fig. 30), and then place the receiver on the operating or testing bench. The tubes and crystal are located beneath a single metal tube shield cover plate, which is removed without the aid of tools.

(4) If a tube has to be removed (fig. 31), use the tube puller provided with the radio set. Refer to paragraph 65*b*(1) for the removal procedure.

(5) Insert or replace tubes and crystal as necessary in accordance with the tube layout chart on the side of the receiver.

(6) There are seven tubes; each one will fit into its socket in only one position. Do not jam the tube in the socket. Rotate the tube gently, until the tube prongs are lined up with their corresponding socket holes; then press the tube straight down into its socket.

Note. Do not mistake the transmitter tubes for the receiver tubes. Transmitter tubes (3A4) look like the tubes used in the receiver.

(7) Only one crystal is in the receiver. To remove it, insert a screwdriver between bias cell BT1 and capacitor C55 (fig. 31) and gently pry the crystal upward, and, at the same time, pull it with the fingers.

(8) Bias cell BT1 used in earlier equipment is wired into the circuit by two solder connections. Later models use a bias cell holder and plug-in style Battery BA–1293/U. The holder contains a socket with a 2-pin female receptacle, which mates with 2 male plug-in pins on the battery. A ring clamp, tightened by a screw on one end, encircles the battery unit when it is plugged in. The socket is wired into the circuit beneath the chassis in the same manner in which the old battery was connected. For information on modification procedures, refer to MWO SIG 11–263–1, Modification of Radio Set AN/GRC–9 to Provide an Inproved Mercury Biased Cell.

(9) The dial light lamp may be removed (par. 65*b*(5)) by using the dial lamp puller (fig. 32).

(10) If the transmitter section is to be checked also, leave the receiver section on the bench. If the transmitter does not need checking, replace the receiver section as instructed in *b*(6) below.

b. Transmitter Tubes and Crystals. The transmitter tubes, except 2E22, are already installed when shipped. Tube 2E22 may be installed prior to shipment or packaged separately. To inspect or replace the tubes and crystals, proceed as follows:

(1) Release the latches that hold the transmitter section to the case and pull the transmitter partially out. The same warning must be observed as described in *a*(1) above when unhooking the latches from this position. Pull out the cable plug from the RECEIVER POWER SOCKET.

Note. Some sets contain a bracket on the inside of the receiver-transmitter case to secure the cable properly.

(2) Install tube 2E22 in its socket (fig. 30) as described in *a*(6) above.

(3) The voltage regulator tube VR105, V104 (fig. 30) can be removed after removing the safety clamp around the base of the tube. Refer to paragraph 65*b*(3) for further instructions pertaining to this clamp.

(4) Tubes V101, V102, and V105 (fig. 120) and crystals 1A, 1B, 2A, 2B, 3A, and 3B are located under a small tube shield cover plate (fig. 30). The cover plate can be removed by releasing the spring catches at both ends of the plate and lifting straight upward. The tubes and crystals are then easily accessable. The tubes can be removed as shown in figure 31.

(5) If the transmitter is shipped without crystals, remove the tube cover plate as described in (4) above. Plug the crystals in their proper sockets as shown on the cover plate. The choice of a crystal depends on the operating frequency, refer to paragraph 22*f* for the crystal frequencies available. Because a frequency doubler circuit is used in the transmitter, the transmission frequency will be twice the natural frequency of the crystal. Therefore, if it is desired to trans-

mit on a frequency of 3,000 kc in BAND 3, a crystal with natural frequency of 1,500 kc should be installed in the appropriate socket. Two crystal oscillator frequencies are available for each of the three bands. Either of the crystals in any one band may be inserted in either of the two sockets available for that band. Therefore, the 1,500-kc crystal should be inserted in either socket 3A or 3B. The transmitter frequency, 2 times the crystal frequency (2X), with the corresponding dial setting (found on the dial calibration chart) for each of the six crystals, should be written on the CRYSTALS chart on the transmitter panel. Because the crystal frequency is one-half of the transmitted frequency, crystals that have a frequency within the allotted range are to be inserted into their respective sockets as follows:

Band	Xmtr freq (kc)	Xtal socket	Xtal freq (kc)
1	6,600–12,000	1A, 1B	3,300–6,000
2	3,600–6,600	2A, 2B	1,800–3,300
3	2,000–3,600	3A, 3B	1,000–1,800

(6) Replace the receiver and transmitter in in the metal case as follows:

(*a*) Place the empty case in a horizontal position with the open face upward and insert either plug of the receiver-transmitter cable through the opening in the left-hand corner of the separating partition.

(*b*) Insert the plug of the receiver-transmitter interconnecting cable into the corresponding receptacle on the back of the receiver chassis. Gently lower the receiver into the lower end of the cabinet and fasten the latches along the side of the receiver panel.

(*c*) Next, place the cable in the small bracket riveted to the back of the case. It is important that this be done to protect the cable from any damage that might occur if it moves about freely inside the case. Earlier models do not have this bracket; observe the caution in (*e*) below.

(*d*) Connect the remaining plug of the cable to the RECEIVER POWER SOCKET on the back of the trans-

Figure 28. Removing front cover of receiver-transmitter.

mitter chassis and lower the transmitter gently into the case.

(*e*) Fasten the latches on the side of the case to the transmitter panel.

Caution: Be sure to dress the cable away from the grounding posts in the cabinet during replacement of receivers and transmitters in order to avoid the possibility of pinching or short-circuiting of the conductors within.

(7) Replace the panel cover if operation is not desired. For storage, strap the receiver-transmitter in Mounting MT–350/GRC–9 as shown in figure 38.

Caution: On earlier models there is no TOP marking on Panel Cover CW–109/GRC–9 and it will be damaged if the clamps and latches are not alined. Do not use the straploops as latches for the clamps. To prevent this damage, place the end of the cover labeled PANEL COVER CW–109/GRC–9 (fig. 28) toward the transmitter before securing the clamps. On later models, the label has the marking TOP added.

33. Installation of Power Supplies

a. Installation of Generator GN–58 (*) (fig. 32). The generator power supply is used to supply power to the receiver-transmitter during ground operation. The generator power supply

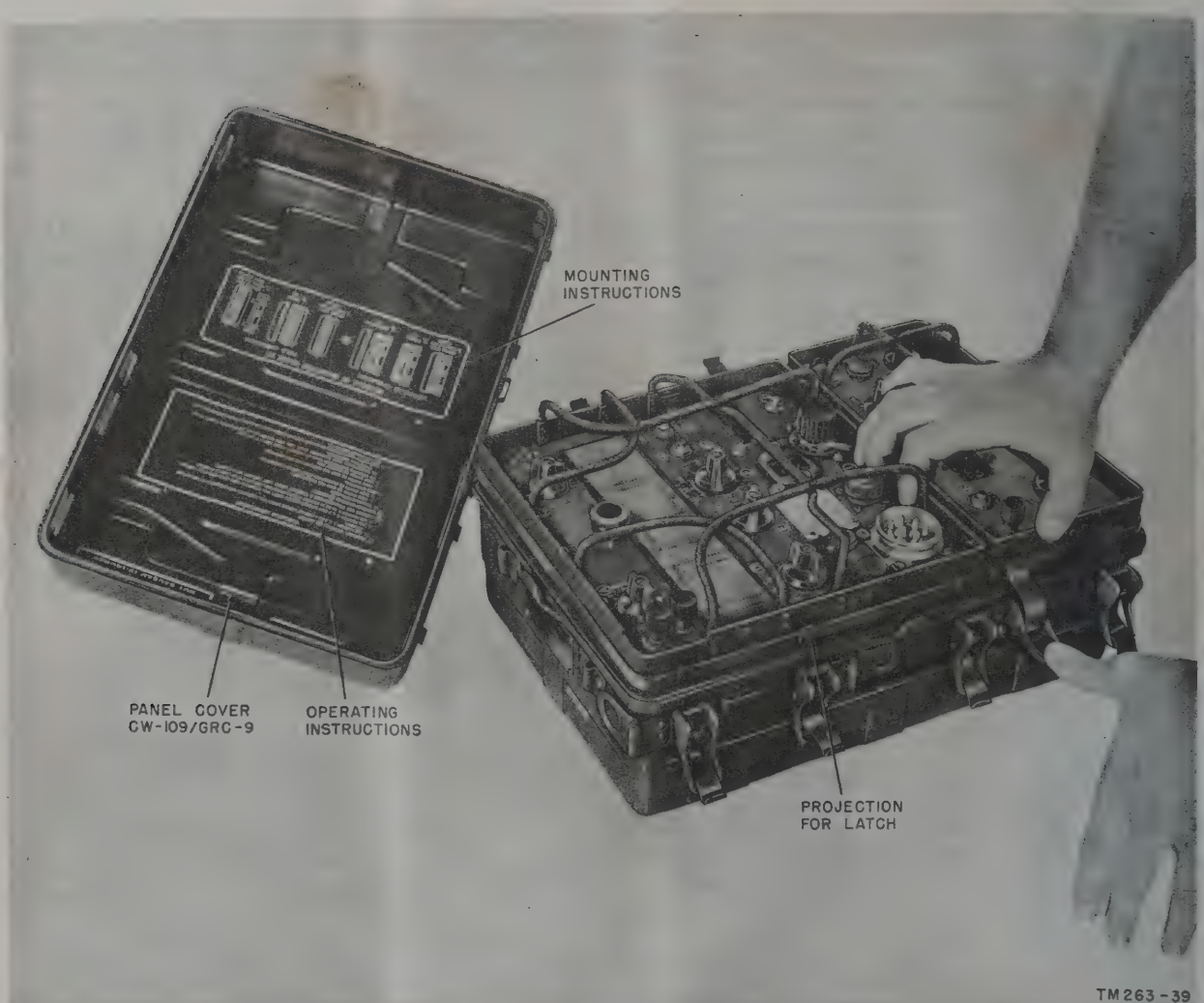

Figure 29. Resetting the latches on receiver-transmitter.

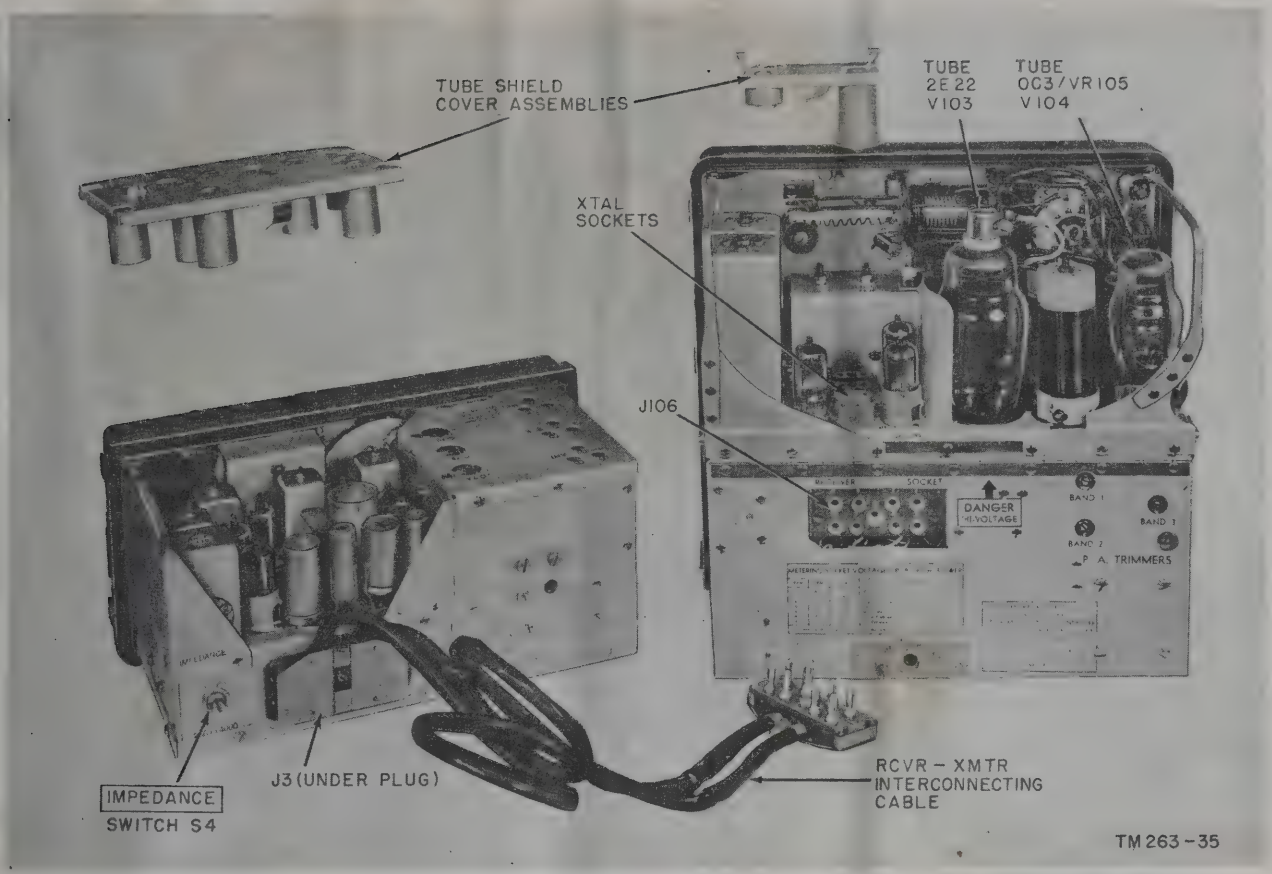

Figure 30. Rear view of radio set out of its case.

is carried in Bag BG–175 and the supporting legs are carried in antenna equipment Roll BG–174. To prepare the generator power supply for operation, refer to figure 33 and proceed as follows:

(1) Insert two Legs LG–3 or LG–3–B upward through the metal loops on the side of the generator power supply which has the order number plate on it. Be sure that the flat metal retaining springs fit into the hollows inside the legs.

(2) Rest the generator power supply on the two legs and slip the bottom of the attachment of Leg LG–2–A into its retainer on the opposite face of the generator power supply. Drop the metal loop over the top of the attachment on the leg.

(3) Loosen the thumbscrew on the bottom plate covering the power cable socket and connect male Plug PL–294 (fig. 41) of Cord CD–1086 (7 feet) to the generator power supply receptacle. Tighten the retainer ring. For most of the later models, loosen the two thumbscrews on the bottom plate that covers the power cable socket until the gasket mounted on the bottom plate is free; then rotate the slotted end of the bottom plate to clear the power cable socket, and insert the male plug of Cord CD–1086 into the generator power supply receptacle.

(4) Loosen one screw on each of the cover plates for the handles, and swing the covers downward. On some of the later models of the unit, the plates are forced open by a spring to expose the crank openings. On still later models, no plates are provided over the crank openings. Instead, there are rubber O-rings to provide a water seal. This new type of crankshaft coupling housing is used for replacement on all models; therefore, it may be found on older models.

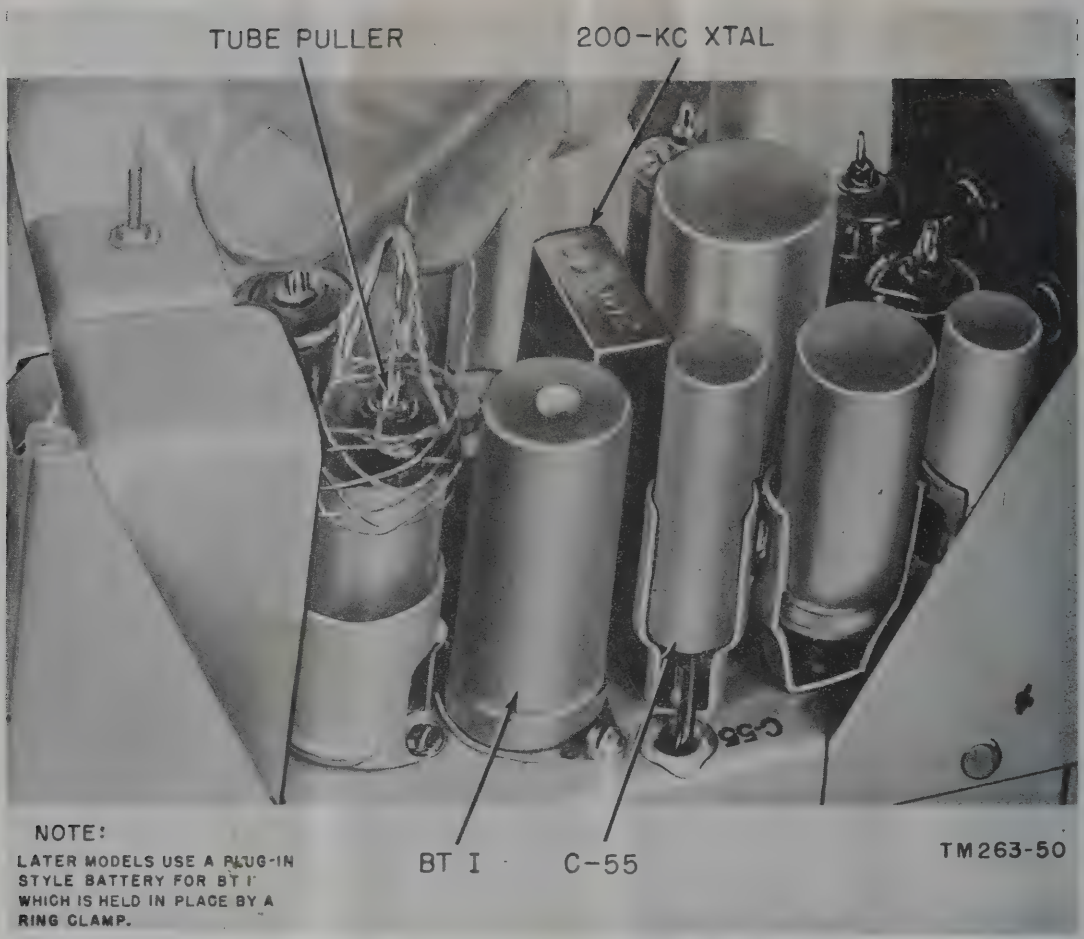
TUBE PULLER
200-KC XTAL
NOTE:
LATER MODELS USE A PLUG-IN STYLE BATTERY FOR BT I WHICH IS HELD IN PLACE BY A RING CLAMP.
BT I
C-55
TM263-50

Figure 31. Removing tubes using tube puller.

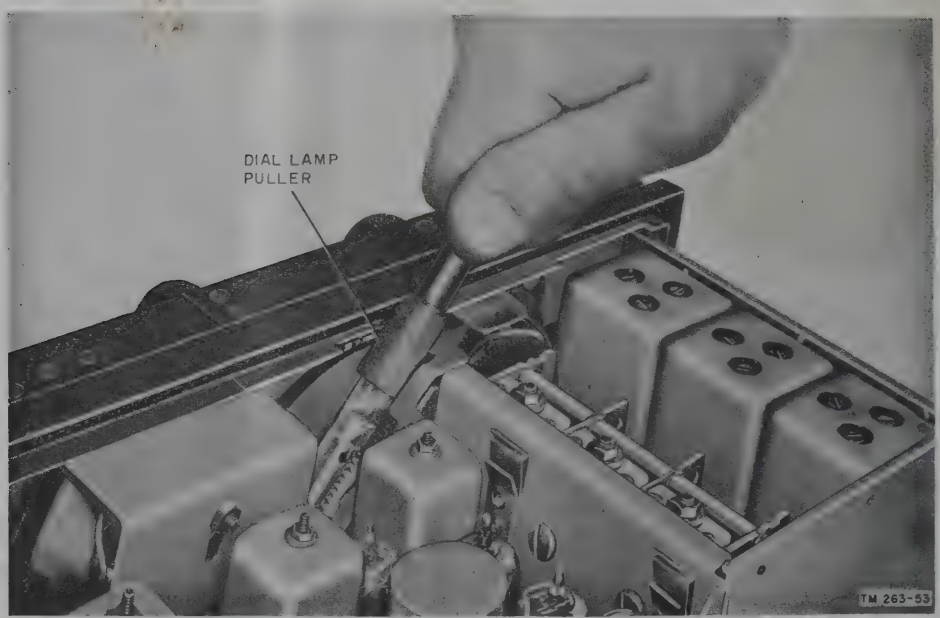

Figure 32. Removing dial lamp using pilot lamp puller.

(5) Insert Crank GC–7 into the sockets on the sides of the generator power supply. The crank handles, when each is fully inserted, should be as far apart as possible. If one handle is at its nearest point to the ground, the other handle should be at its highest point in the air.

b. Installation of Power Unit PE–162–A, PE–162–B, or PE–162–C. No wiring changes are necessary in the cords or plugs of the radio set to operate from this power supply. The operation of the radio set, with respect to control settings, is the same as when using the other power supplies. For installation of this power supply, refer to TM 11–971.

c. Installation of Power Supply PP–327 (*)/GRC–9Y. For installation of this power supply, refer to TM 11–5070.

d. Installation of Battery BA–48. This power supply is put in Bag CW–140/GRC–9 and placed on top of the receiver-transmitter case.

Note. If the vibrator or dynamotor power supplies are to be used in a ground installation, they must be bolted down as follows; bolt the power supply used to a horizontal surface, leaving clearance to permit free movement of the power supply on its mounts. The location should be selected to permit the power cables to reach the power source and to permit Cord CD–1086 to reach the receiver-transmitter.

Figure 33. Generator GN–58 set up for operation.

Section V. VEHICULAR INSTALLATION

34. Vehicular Installation of Radio Set (fig. 34)

a. Refer to paragraph 22*h* for a list of some of the various installation kits used with the different types of vehicles that transport the radio set.

b. If possible, install Radio Set AN/GRC–9(*) in vehicle that has a 12- or 24-volt electrical system. Avoid installing it in vehicles having 6-volt systems. The high-current drain at 6 volts makes it difficult to keep the vehicular storage battery charged.

c. A vehicle that has an electrical system with *negative* ground must be used. The radio set will not operate properly in vehicles having positive grounded electrical systems.

35. Vehicular Installation of Receiver-Transmitter

a. Select a location in which the controls will be accessible to the operator, and which is close to the position chosen for the antenna (fig. 39).

b. Use Mounting MT–350/GRC–9 (fig. 4) to support and shock mount the receiver-transmitter. Mounting MT–350/GRC–9 is fastened directly to a vertical surface in the vehicle, with the hardware provided. If a horizontal surface is selected, install Mounting MT–350/GRC–9 on Frame FM–85, part of vehicle installation kit (fig. 35). Figure 36 shows the mounting and frame installed in a vehicle.

c. Remove Panel Cover CW–109/GRC–9 from the receiver-transmitter (par. 32*a*(1)) and replace the latches on the case to the projections on the receiver and transmitter sections (par. 32*a* (2)). For normal operations, place the cover between the receiver-transmitter and Mounting MT–350/GRC–9 (fig. 37).

d. Fasten the equipment by means of straps on the mounting, passed through belt loops on the receiver-transmitter. The narrow strap in the center of each side of the mounting holds Panel Cover CW–109/GRC–9 in place so that the re-

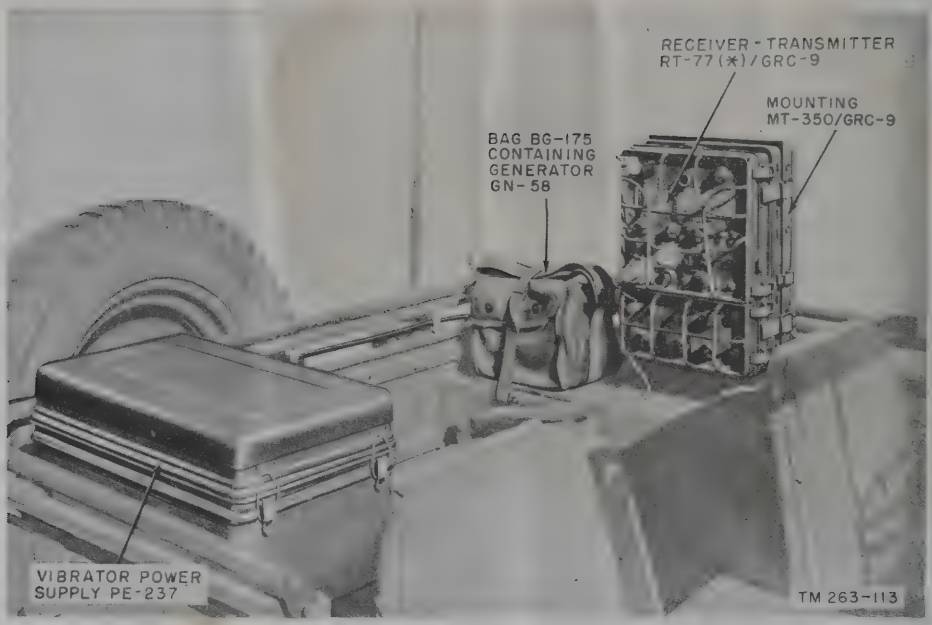

Figure 34. Typical vehicular installation of radio set.

ceiver-transmitter may be removed if desired, leaving the panel cover in place.

e. For transportation or storage, strap the receiver-transmitter in Mounting MT–350/GRC–9 with Panel Cover CW–109/GRC–9 secured over the face with the latches (fig. 38).

f. Connect a ground lead (as short as possible) from the GND. post on the receiver panel to a nearby grounded metal portion of the vehicle (fig. 36).

Caution: When removing the panel cover, be sure to refasten the latches to the receiver-transmitter chassis (fig. 37).

36. Vehicular Installation of Whip Antenna

a. The vehicular antenna consists of five mast sections (three Mast Section MS–116 or MS–116–A, one Mast Section MS–117 or MS–117–B, and one Mast Section MS–118 or MS–118–A). Mast Base MP–65 or MP–65–A and Mast Bracket MP–50 or other appropriate brackets are required to secure the antenna to the vehicle (fig. 39).

b. Select an antenna location close to the receiver-transmitter to permit a short antenna lead of Wire W–128. If possible, use a lead length of 19 inches or less. *Where this is not possible, lengths up to 6 feet may be used; however, for antenna leads between 19 inches and 6 feet, use four mast sections instead of five when operating on frequencies above 11 mc.* This is necessary to permit proper operation of the transmitter at these upper frequencies when using a long antenna lead.

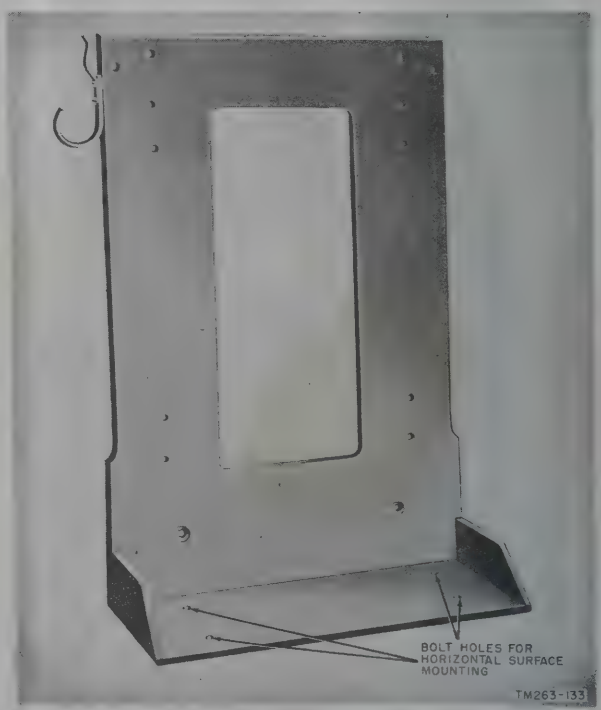

Figure 35. Frame FM–85.

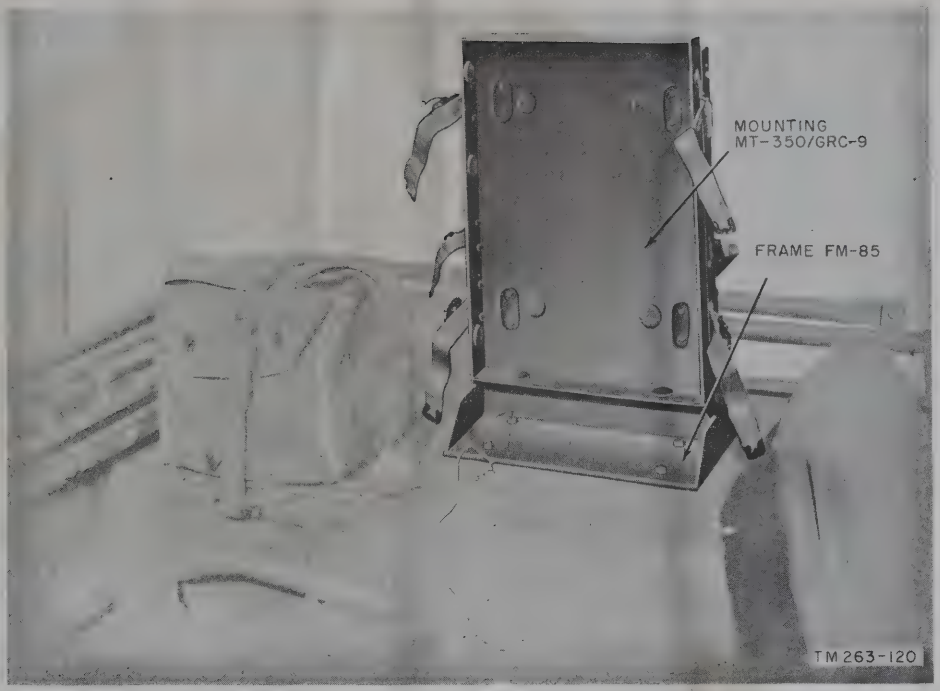

Figure 36. Mounting MT–350/GRC–9 and Frame FM–85, installed in vehicle.

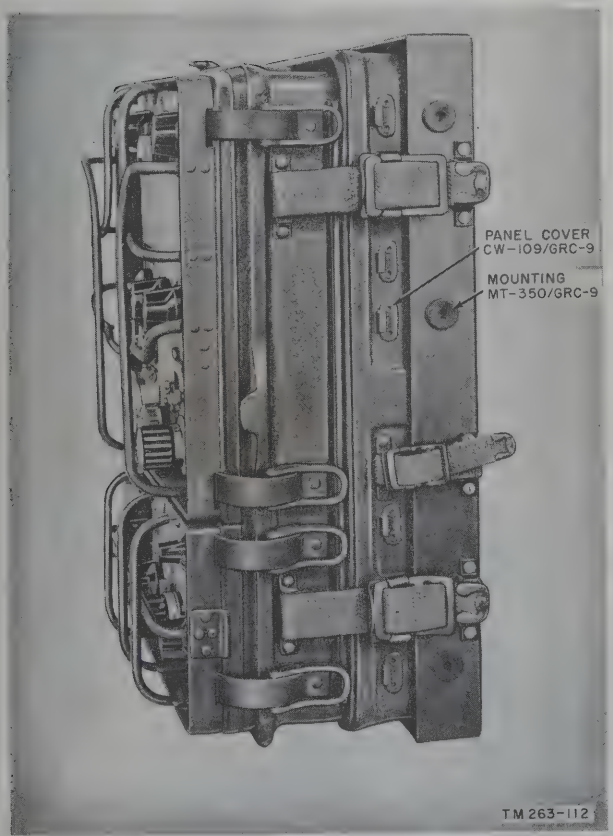

Figure 37. Receiver-transmitter mounted for vehicular use.

c. Install Mast Bracket MP–50, but be sure that—

(1) The antenna will not be shielded by adjacent metal.

(2) The bracket is installed on a part of the vehicle strong enough to withstand the shock of trees or other obstacles which might hit the antenna.

d. Install Mast Base MP–65 or MP–65–A.

e. Connect the antenna lead of Wire W–128 from the binding post on the mast base to the upper binding post on the transmitter panel marked ANT.

37. Vehicular Installation of Power Supplies

a. Vibrator Power Supply PE–237.

(1) Bolt the vibrator power supply (fig. 34) to a horizontal surface, leaving clearance to permit free movement of the power unit on its shock mounts. The location should be selected to permit the power cables to reach the vehicle power terminal box and to permit Cord CD–1086 to reach the receiver-transmitter (fig. 34).

(2) Connect the battery power cables (fig. 10) to the vehicle terminal box; be sure that:

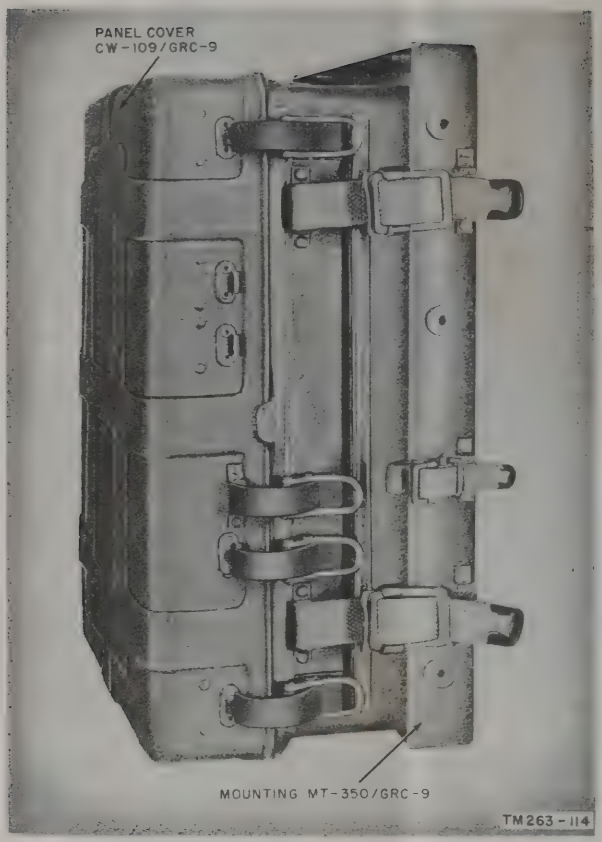

Figure 38. Receiver-transmitter mounted for vehicular transportation or storage.

(*a*) The negative (—) terminal of the vehicle storage battery is grounded to the vehicle frame. The radio set will not operate properly in vehicles with the positive battery terminal grounded.

(*b*) The negative lead of the vibrator power supply is connected to the grounded terminal in the vehicle terminal box.

(*c*) The input voltage setting of the vibrator power supply corresponds to the vehicular battery voltage. The switch can be checked visually for correct voltage position by looking at it through the transparent window, which is provided for that purpose in the side of the vibrator case.

(3) To change the VOLTAGE CHANGE SWITCH, proceed as follows:

(*a*) Remove the top cover of the vibrator power supply.

(*b*) The input operating voltage of the vibrator power supply can be adjusted 6, 12, or 24 volts to correspond with that of the vehicular battery used. To change from one operating volt-

Figure 39. Typical installation of vehicular antenna.

age to another, raise the handle on the VOLTAGE CHANGE SWITCH to release it from a locked position (fig. 134) and turn it to the desired setting.

(*c*) Replace the cover; be sure that the marking FRONT is placed on the control side of the unit.

(4) For connections of the vibrator power supply to the receiver-transmitter, refer to paragraphs 39*e* and 40*a*.

b. Dynamotor-Power Supply DY–88/GRC–9.

(1) Select a horizontal mounting surface that permits Electrical Special Purpose Cable Assembly CX–2031/U to reach the vehicular power terminal box or battery and that permits Cord CD–1086 ($3\frac{2}{3}$ feet or 7 feet) to reach the receiver-transmitter. Allow enough clearance to permit free movement of the power supply on its shock mounts. The terminal lugs supplied as part of Electrical Special Purpose Cable Assembly CX–2031/U will fit the terminals of the vehicular power terminal box (par. 40*b*). Larger size terminal lugs are provided in the hardware bag when connection must be made directly to the vehicular battery terminals.

(2) When the power supply front panel does not overhang the edge of the mounting surface, be sure to use the $\frac{5}{16}$-inch thick washers (provided in the hardware bag) between the shock mounts and the

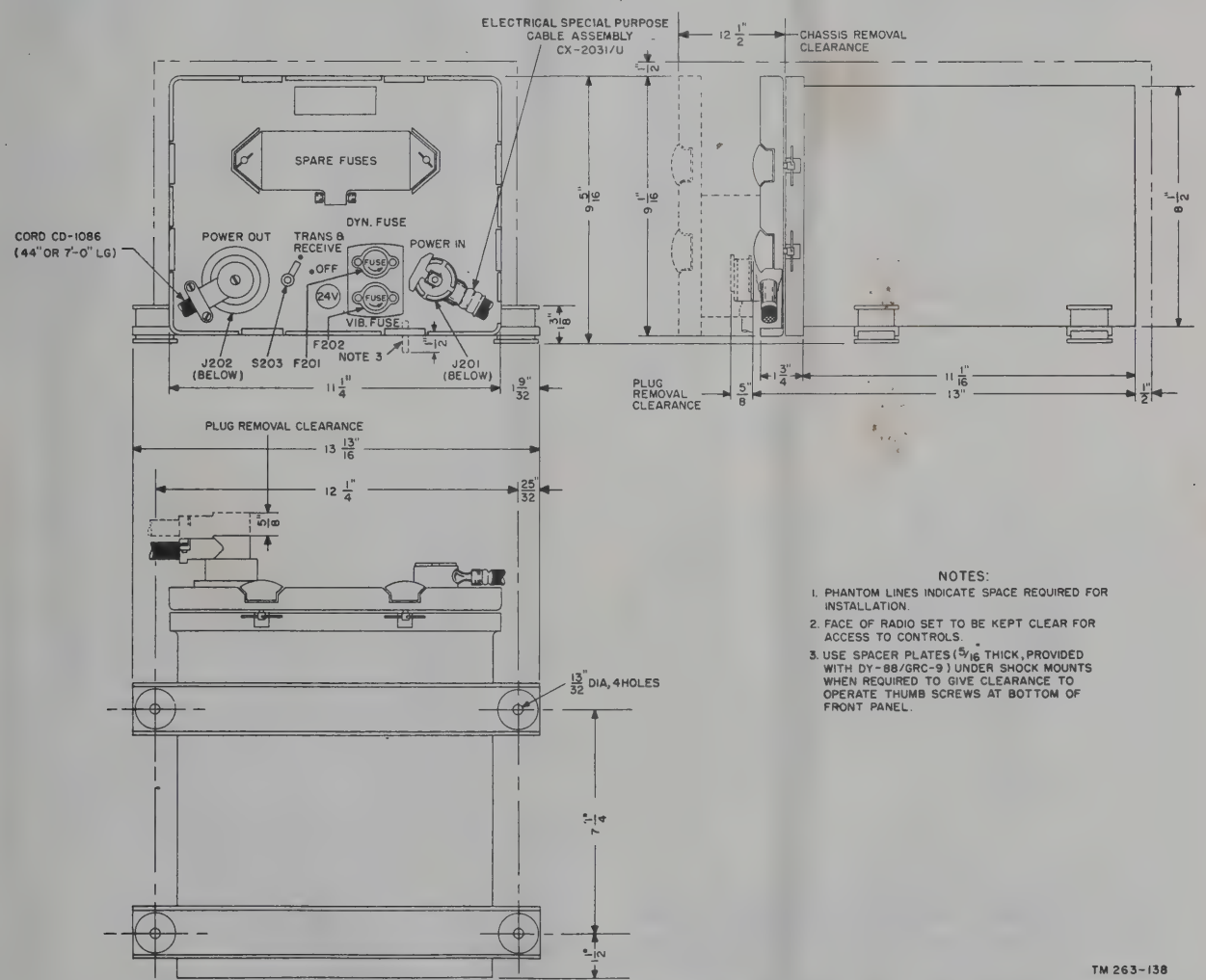

Figure 40. Dynamotor-Power Supply DY–88/GRC–9, outline dimensions and clearances.

mounting surface. This provides clearance for operating the thumbscrew fasteners at the bottom of the panel. Later models have spacers permanently fastened to the underside of the shock mounts, and no additional spacers are required when making the installation. When bolting the power supply to a grounded metal mounting surface, be sure that one of the mounting bolts passes through the free end of the ground strap. Use one of the internal-external toothed lockwashers (provided in the hardware bag) between the ground strap lug and the head of the mounting bolt, and another similar type lockwasher between the nut and the mounting surface.

(3) Outline dimensions and clearances are shown in figure 40.

(4) The input voltage switch setting of the power supply corresponds to the vehicular battery voltage. The knob (H206) of this switch is located behind the front panel (fig. 143). To change the setting of the switch, proceed as follows: release the eight clamps on the front panel by turning them a half turn. Remove the cover. Change the switch position by rotating the knob to the correct operating voltage. The position of H206 can be checked visually by viewing it through the transparent window on the front panel. Put the cover back on.

(5) When the input voltage is changed, the DYN. FUSE must be changed to correspond with the voltage being used.

(6) The fuses are as shown in the following chart:

Battery voltage (volts)	DYN. FUSE (amperes)	VIB. FUSE (amperes)
6	30	5
12	20	5
24	10	5

c. Dynamotor-Power Supply DY–105/GRC–9X. The installation of this power supply is identical to the installation of Dynamotor-Power Supply DY–88/GRC–9 except for the following differences:

(1) There is no input voltage setting.

(2) Dynamotor-Power Supply DY–105/GRC—9X will operate only on a 24-volt vehicular battery.

(3) The VIB. FUSE is rated at 3 amperes.

(4) There is only one DYN. FUSE size, however, it has the same current and voltage rating (10 amperes at 32 volts).

Section VI. CONNECTIONS

38. Receiver-Transmitter Connections

The separate receiver and transmitter sections are connected by the receiver-transmitter interconnecting cable (fig. 30), which is secured (in some units) to the metal case behind these sections. Refer to paragraph 32*b*(6) for instructions to connect this cable. No other cords or cables are used between these sections. See B, figure 54 for the wiring diagram of the cable and its connectors.

39. Radio Set Connections

Connect all operating components of the radio set in accordance with the cording diagram shown in figure 41 and the illustration in figure 42. Connect the cords used with the radio set as follows:

a. Turn control Ⓔ to OFF and the starting power switches on the power supplies to their off positions. Insert female Plug PL–279 into the POWER (male) receptacle on the radio set and the other end (male Plug PL–294) to the female receptacle on the power supply furnished (except Battery BA–48). Secure the connectors at each end by tightening the retaining rings supplied on the cord connectors. Use Cord CD–1086 (3⅔ feet or 7 feet), as required. See A, figure 54 for the internal wiring diagram. When using Power Unit PE–162–A, PE–162–B, or PE–162–C, connect this power supply to the radio set by Cord CX–75/TRC–2. This cord has the same type female plug connector (Plug PL–279) as Cord CD–1086.

Note. In vehicular installations, secure Cord CD–1086 so that it can be easily removed for field use.

b. Insert Plug PL–55 of the headset or loudspeaker into the PHONES jack on the receiver panel.

c. Insert Plug PL–55 of Key J–45 into the KEY jack of the transmitter if the key is to be used.

d. Insert Plug PL–68 of the microphone cord into the MIKE jack on the transmitter panel if the microphone is to be used.

Note. The microphone and headsets are part of the field and vehicular installation kits (par. 22*i* and *h*) that must be ordered through regular supply channels.

e. Connect the antenna lead into the antenna binding posts on the transmitter panel in accordance with either paragraph 29, 30, or 31, whichever is appropriate.

f. When using Battery BA–48, connect the male plug of Cord CD–1119 between the receptacle of the battery and the female plug (Plug PL–257) of the cord into the BATTERY receptacle on the transmitter. Refer to C, figure 54 for the internal wiring diagram of the cord.

40. Power Supply Input Connections

Caution: The power supplies of the radio set require the negative pole of the vehicular battery used to be grounded to the frame of the vehicle. Check this polarity before connecting the power input cables. Also, set control Ⓔ on the transmitter to OFF.

a. Vibrator Power Supply PE–237.

(1) Connect two short ground straps, one at each end of the power supply, from any of the bolts on the underside of the power supply to an adjacent grounded metal portion of the vehicle. This provides a direct low-resistance path to ground for the unwanted rf

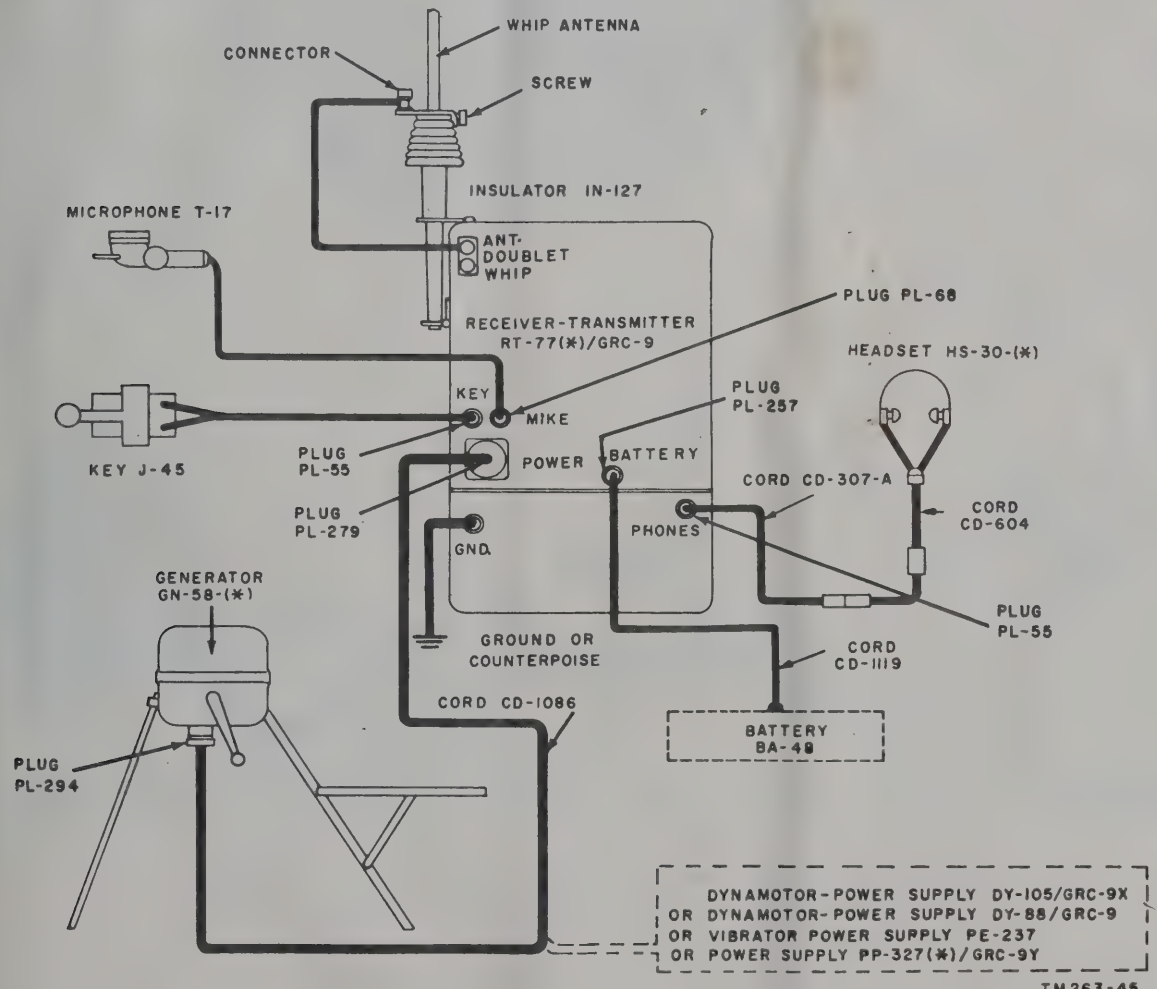

Figure 41. External connections, line drawing.

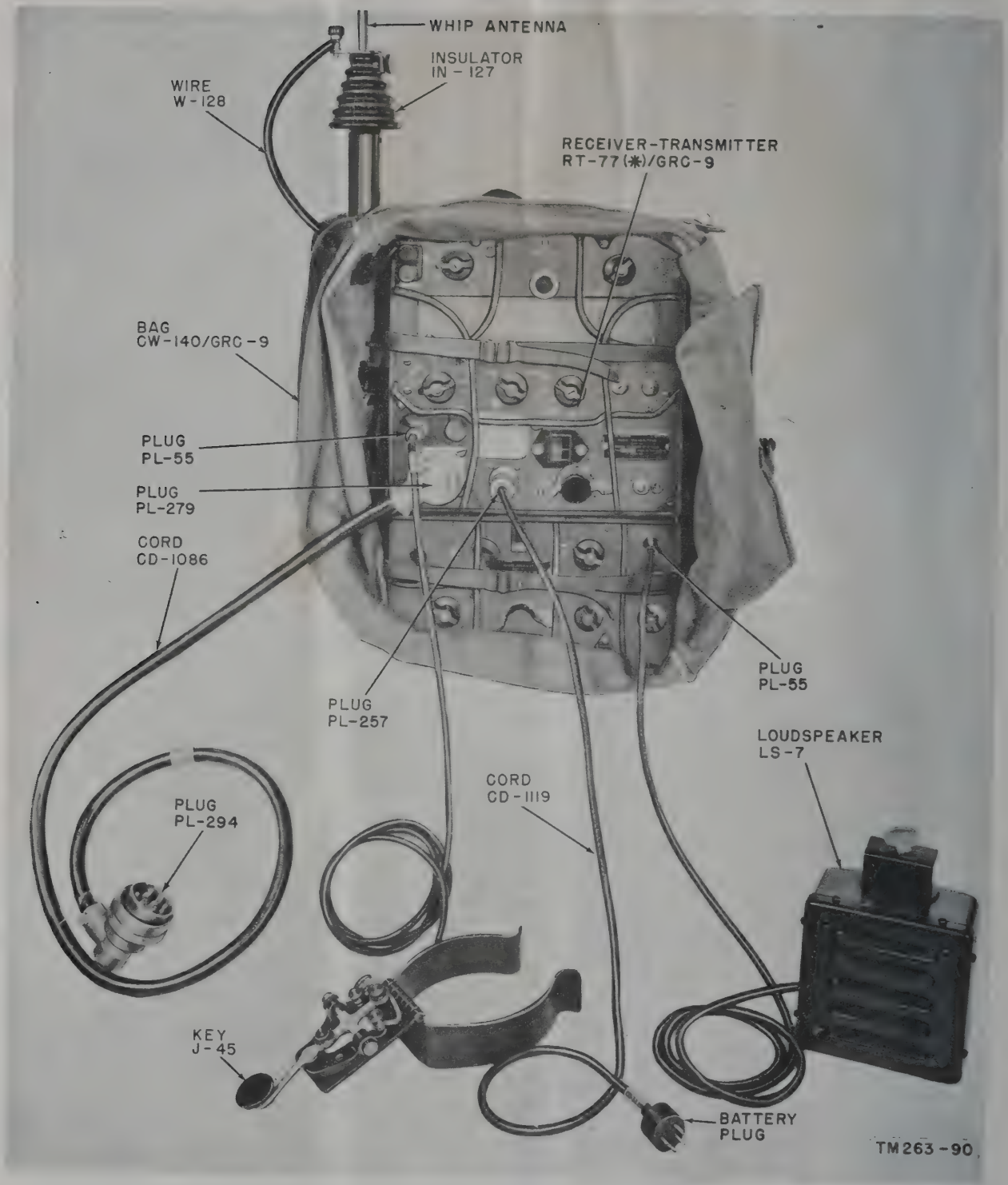

Figure 42. External connections to Receiver-Transmitter RT-77(*)/GRC-9.

interference that vibrator power supplies generate.

(2) Push the OFF button on the power supply.

(3) Connect the power cable to the vehicle terminal box; be sure that:

(*a*) The negative (—) terminal of the vehicle storage battery is grounded to the vehicle frame. (The set will not operate properly in vehicles with the positive battery terminal grounded.)

(*b*) The negative lead of the power cable is connected to the ground terminal in the vehicle terminal box.

(*c*) The positive lead is connected to the ungrounded terminal in the terminal box.

b. Dynamotor-Power Supply DY–88/GRC–9.

(1) Turn the TRANS & RECEIVE switch to OFF.

(2) When the power supply is mounted on an ungrounded surface, connect the free end of the ground strap to a nearby grounded metal portion of the vehicle.

(3) Connect the input power cable as instructed in *a*(3) above. If the cable is connected directly to the battery, refer to paragraph 37*b*(1).

c. Dynamotor-Power Supply DY–105/GRC–9X. The connections are identical to the procedure given in *b* above.

d. Power Supply PP–327(*)*/GRC–9Y.* For connections, refer to TM 11–5070.

CHAPTER 3
OPERATION

Section I. CONTROLS AND INSTRUMENTS

Note. This section locates, illustrates, and describes the use of the various controls and instruments that are provided for the proper operation of the equipment.

41. General

Improper settings of the controls will cause inefficient operation. It is important to know the function of all of the controls of Radio Set AN/GRC–9(*). The actual operation of the radio set is described in paragraph 45 through 61.

42. Transmitter Section (fig. 43)

The following chart lists the controls of the transmitter section of the radio set and indicates their functions.

Panel letter	Control or instrument	Function
Ⓐ	ANT. SELECTOR switch	Permits use of a whip, long-wire, or doublet antenna.
Ⓑ	INDICATOR neon lamp	Permits correct tuning of the transmitter when glowing at its brightest level.
Ⓒ	ANTENNA TUNING control	Permits antenna used to be tuned for frequency of transmission.
Ⓓ	Modulation-power switch	Permits use of PHONE, MCW, or CW operation and reduces the power output in LO position for shorter ranges of transmission.
Ⓔ	OFF-SEND-STANDBY switch	Permits the radio set to transmit on SEND and to receive on either SEND or STANDBY.
Ⓕ	Oscillator-band switch	Permits either XTAL or MO operation. The positions of the switch are as follows: 1. *Band 1 (6.6 to 12.0 mc)* *a.* XTAL, 1A or 1B. *b.* MO. 2. *BAND 2 (3.6 to 6.6 mc).* *a.* XTAL, 2A or 2B. *b.* MO. 3. *BAND 3 (2.0 to 3.6 mc).* *a.* XTAL, 3A or 3B. *b.* MO.
Ⓖ	SIDE TONE VOL. control	Permits desired level of sidetone signal fed to the receiver. Control Ⓖ has a slotted shaft, which requires a small screw driver for adjustments.
Ⓗ	OSC. CAL. CONTROL	Permits calibration of the transmitter and alignment to receiver when operating in a net system. This control requires a screw driver for adjustment. The receiver must be placed in the NET position of control Ⓛ for this procedure.
Ⓘ	FREQ. CONTROL	Permits continuous tuning of transmitter for any band setting, thus selecting frequency of transmission. A lock is provided on the knob to keep control Ⓘ in a fixed position once it is set.
Ⓙ	DIAL LIGHT switch	When pressed, this switch illuminates the dial window.

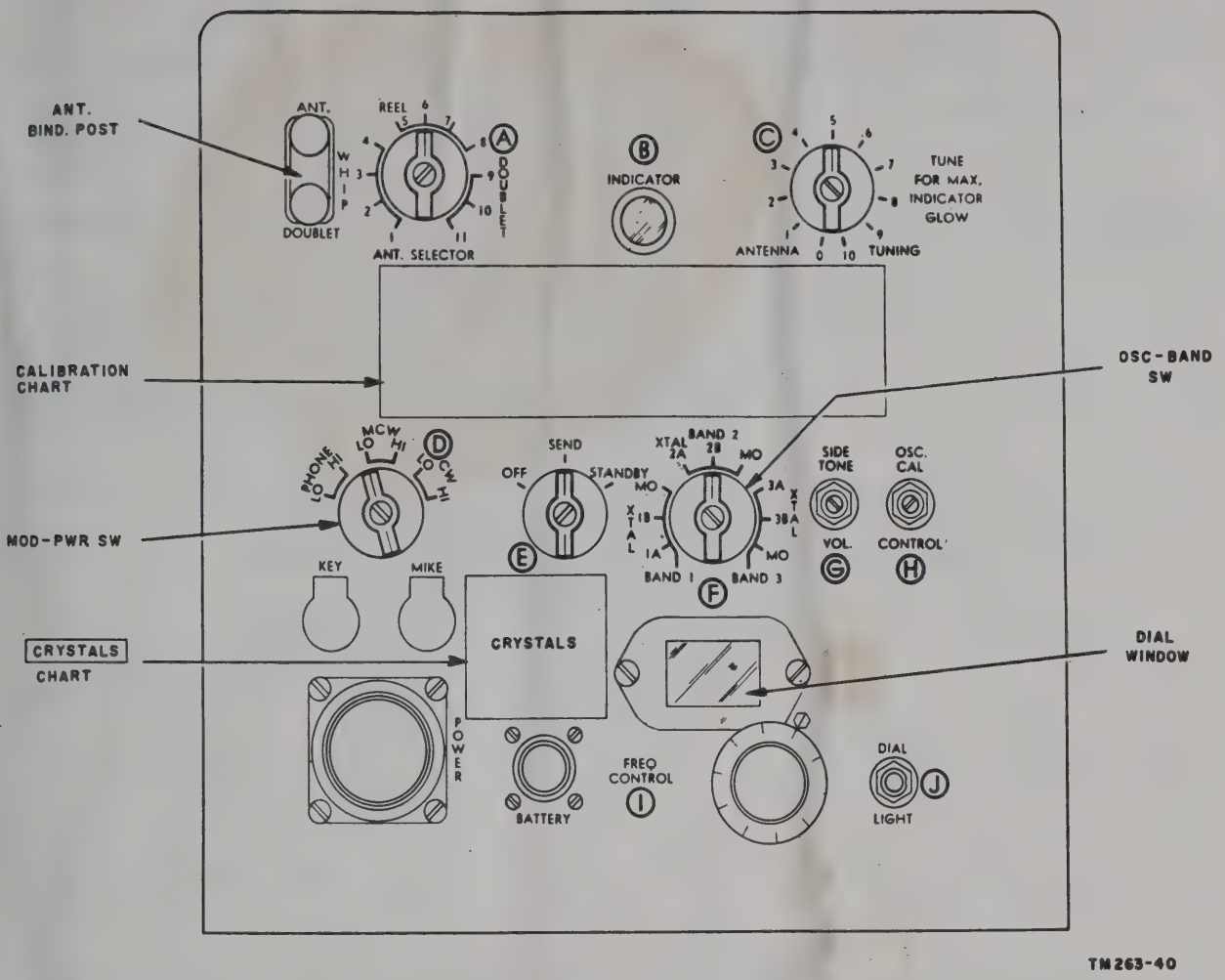

Figure 43. Transmitter front panel controls.

43. Receiver Section
(fig. 44)

The following chart lists the controls of the receiver section and indicates their functions:

Panel letter	Control or instrument	Function
Ⓚ	DIAL LIGHT PUSH switch_____	When pressed, this switch lights a small panel light in back of the receiver dial.
Ⓛ	Operation switch_____	Selects type of operation desired and checks the dial calibration of the receiver. 1. *PHONE.* This position allows the reception of voice or mcw signals. 2. *C.W.* When placed in this position, cw signals can be received because the bfo stage is automatically turned on. 3. *NET.* Permits alignment of transmitter to the station in which it is desired to hold communication. 4. *CAL.* Permits calibration of receiver.

Panel letter	Control or instrument	Function
Ⓜ	Receiver band swtich	Permits selection of any of the three frequency bands available. As the band switch is turned from one band to another, a mechanically coupled mask operates to cover the dial calibration of the unused frequency bands. The frequency range of each band is given below: *a.* The lower scale on the dial is BAND 3, which covers the frequency range of 2.0 mc to 3.6 mc, with dial marks at each 20 kc. *b.* The middle scale on the dial is BAND 2, which covers the frequency range of 3.6 mc to 6.6 mc with dial marks at every 20 kc. *c.* The top scale is BAND 1, which covers the frequency range of 6.6 mc to 12.0 mc with dial marks at every 50 kc.
Ⓝ	TUNING control	This knob tunes the receiver and controls the operation of the calibrated dial, which is viewed through the dial window. A dial lock on the tuning knob allows the dial to be locked in a fixed position once it is set on the desired frequency.
Ⓞ	A.F. GAIN control	This is a volume control that varies the strength of the audio signal delivered to either the headset or the loudspeaker.
Ⓟ	R.F. GAIN control	This control varies the gain of the receiver.
	IMPEDANCE switch (fig. 29)	This is two-position switch adjusted by a screw driver as follows: 1. Turned to 250 for headset reception. 2. Turned to 4,000 for loudspeaker reception.
	PHONES jacks	These two jacks serve two purposes at the same time as follows: 1. Permit plugging in either of two headsets or two loudspeakers. 2. Turn receiver filament circuit on when the plug of the loudspeaker or of the headset is connected.

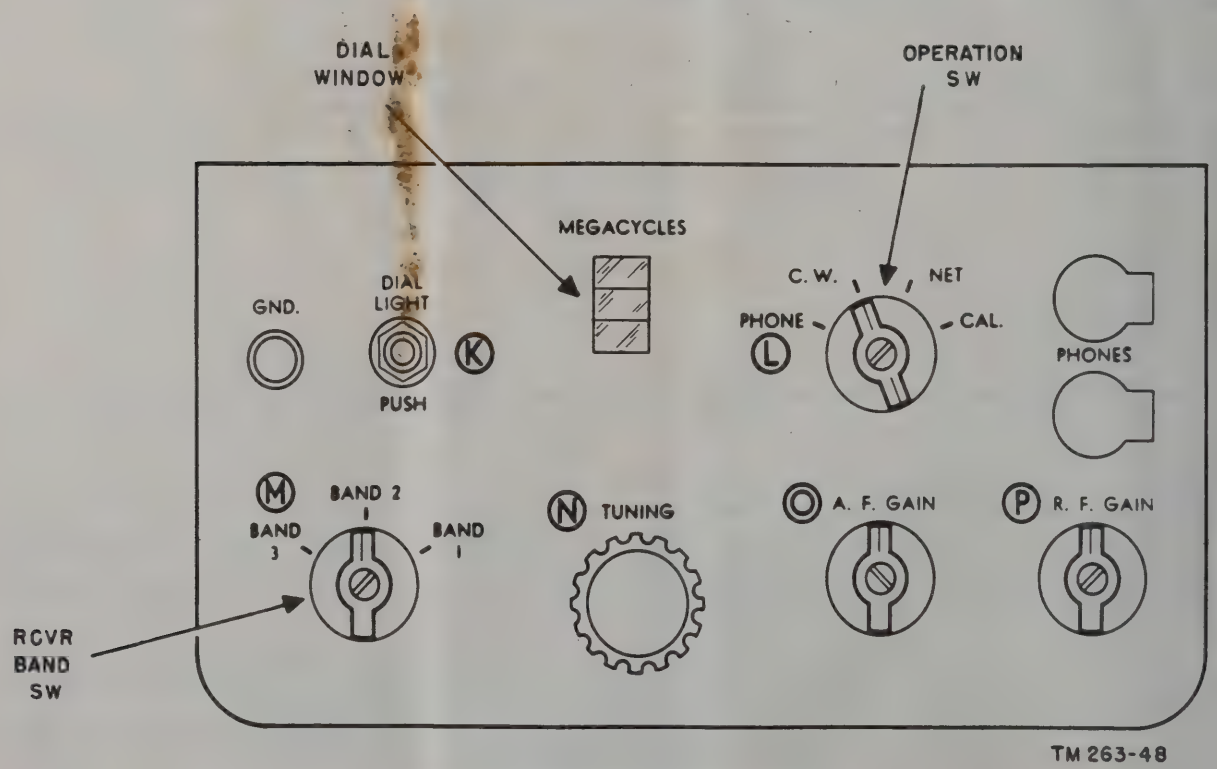

Figure 44. Receiver front panel controls.

44. Power Supplies

The following charts list the controls and functions of the power supplies.

a. Dynamotor—Power Supply DY–88/GRC–9 (fig. 45).

Control or instrument	Function
TRANS & RECEIVE-OFF switch	Turns on the dynamotor power supply when turned to TRANS & RECEIVE and control Ⓔ on the transmitter is placed in either the SEND or STAND-BY position.
Voltage selector switch (fig. 142)	Permits operation from either a 6-, 12-, or 24-volt vehicular battery.
Voltage-indicator window	Indicates visually the position of the voltage selector switch.
DYN. FUSE	Protects the dynamotor section.
VIB. FUSE	Protects the vibrator section.
SPARE FUSES receptacle	Contains the operating fuses that are not used and holds some of the spare fuses.

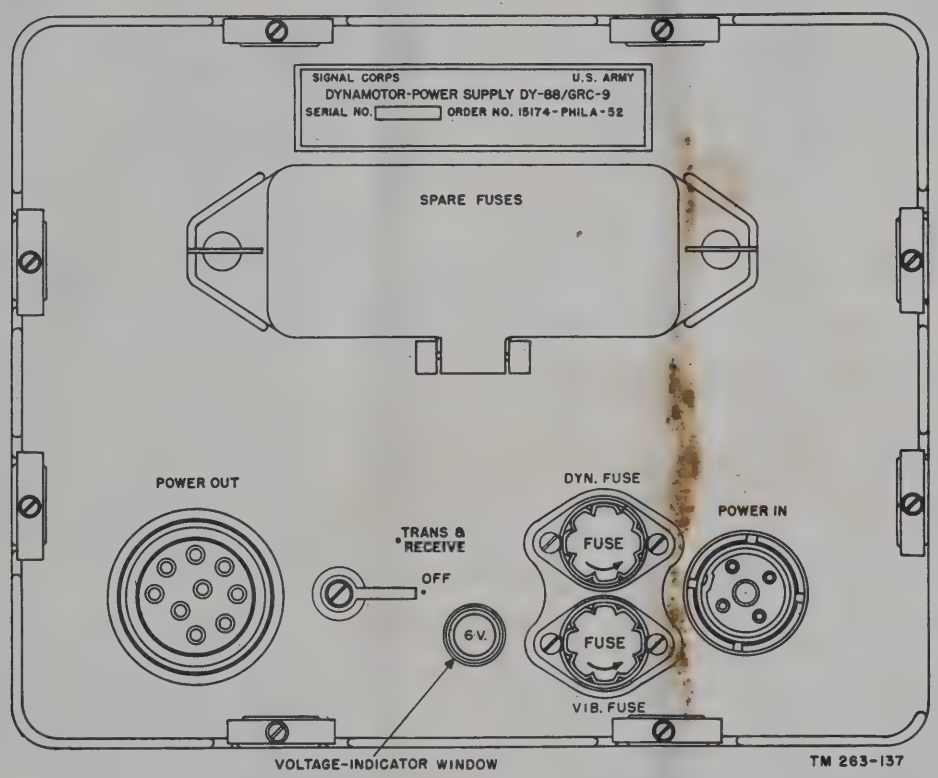

Figure 45. Dynamotor-Power Supply DY–88/GRC–9, front panel controls.

b. Dynamotor—Power Supply DY–105/GRC–9X (fig. 46).

Control or instrument	Function
TRANS RECEIVE-OFF switch	Turns on dynamotor power supply when turned to TRANS RECEIVE and when control Ⓔ on the transmitter is placed in either the SEND or STAND-BY position.
Spare FUSES receptacle	Contains spare fuses for the dynamotor and vibrator sections.
DYN. FUSE	Protects the dynamotor section.
VIB. FUSE	Protects the vibrator section.

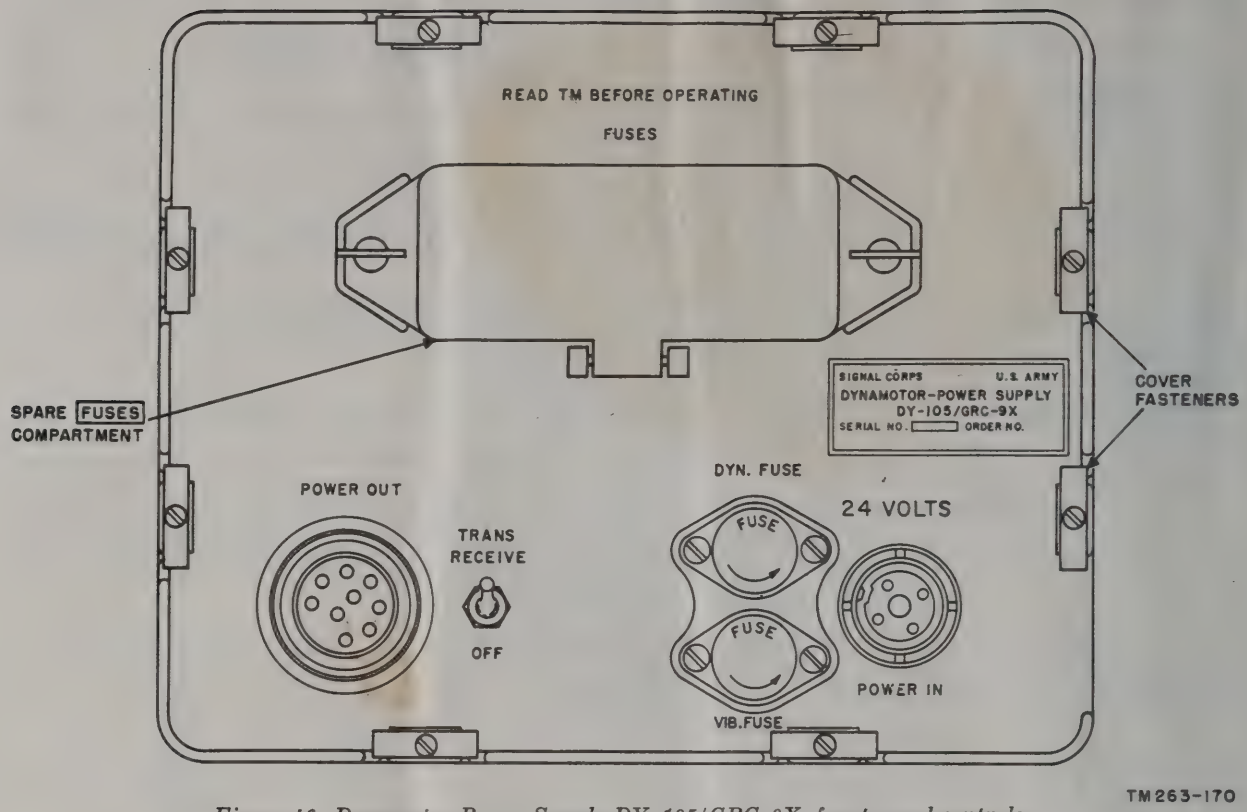

Figure 46. Dynamotor-Power Supply DY–105/GRC–9X, front panel controls.

c. Vibrator Power Supply PE–237 (fig. 10).

Control or instrument	Function
ON-OFF switch	Turns on the vibrator power supply when pressed to ON and control Ⓔ on the transmitter is placed in either the SEND or STANDBY position.
VOLTAGE CHANGE SWITCH (fig. 133).	Permits operation from either a 6-, 12-, or 24-volt vehicular battery.
Voltage-indicating window	Indicates visually the voltage setting of the VOLTAGE CHANGE SWITCH.

d. Generator GN–58–(*). The handles are the only controls of the generator power supply and are turned in a clockwise direction for proper operation of the equipment.

Caution: Do not rotate the handles in a counterclockwise direction because damage to the generator power supply will result.

e. Power Supply PP–327(*)/GRC–9Y. For controls and instruments, refer to TM 11–5070.

Note. In later models, the fuses are rated at ¾ ampere and are of the slow-blow type.

f. Power Unit PE–162–A, PE–162–B, and PE–162–C. Refer to TM 11–971 for the description of the controls.

Section II. OPERATION OF POWER SUPPLIES

45. Preliminary Starting Procedure

a. Dynamotor-Power Supply DY–88/GRC–9.

(1) Turn the TRANS & RECEIVE-OFF switch to OFF.

(2) Check the voltage of the storage battery to be used. If the voltage does not agree with that shown on the drum dial as viewed through the voltage-indicator window on the front

panel of the dynamotor power supply, request the unit repairman to remove the power supply chassis from the case (par. 37*b*(4)) and set the voltage selector switch (fig. 143) to the correct voltage. Replace the power supply chassis.

(3) Remove the DYN. FUSE and check it against the voltage of the storage battery to be used. The rating of the fuse to be used is given in paragraph 37*b* (6).

(4) Make certain that the VIB. FUSE is rated at 5 amperes.

b. Dynamotor-Power Supply DY–105/GRC–9X.

(1) Turn the TRANS RECEIVE-OFF switch to OFF.

(2) Make certain that the DYN. FUSE is rated at 10 amperes, and that the VIB. FUSE is rated at 3 amperes.

c. Vibrator Power Supply PE–237.

(1) Push the OFF-ON button to OFF.

(2) Check the voltage of the storage battery to be used. If the voltage does not agree with that shown on the drum dial, remove the top cover, pull up the VOLTAGE CHANGE SWITCH (fig. 133), and set the pointer to the correct voltage. Replace the cover.

d. Power Supply PP–327(*)/GRC–9Y.

(1) Throw the POWER ON-OFF switch to OFF.

(2) Check the ac voltage source and set the 115 or 230 input voltage selection switch accordingly.

(3) Be sure all of the fuses are rated at ¾ ampere.

e. Power Unit PE–162–A, PE–162–B, or PE–162–C. Refer to TM 11–971 for preliminary starting instructions.

46. Starting Procedure for Power Supplies

The starting switches in the power supplies, when turned on, cannot turn on the power supplies. Control Ⓔ in the transmitter must be set at either SEND or STANDBY to complete the starting circuit of the power supplies. Turn control Ⓔ to OFF and proceed as follows:

a. Dynamotor-Power Supply DY–88/GRC–9.

(1) If not done previously, perform the preliminary starting procedure given in paragraph 45*a*.

(2) Turn the TRANS & RECEIVE-OFF switch to TRANS & RECEIVE.

(3) Turn control Ⓔ to STANDBY. Place one hand on the power supply case, vibrations should be felt.

(4) Turn control Ⓔ to SEND. A steady hum in the dynamotor power supply will be heard.

b. Dynamotor-Power Supply DY–105/GRC–9X.

(1) If not done previously, perform the preliminary starting procedure given in paragraph 45*b*.

(2) Turn the TRANS RECEIVE-OFF switch to TRANS RECEIVE.

(3) Follow the procedures given in *a*(3) and (4) above.

c. Vibrator Power Supply PE–237.

(1) If not done previously, perform the preliminary starting procedure given in paragraph 45*c*.

(2) Push the OFF-ON switch to ON.

(3) Follow the procedures given in *a*(3) and (4) above.

(4) The ON-OFF switch is also a circuit breaker that will open the circuit if the vibrator power supply draws too much current from the vehicular battery for any reason. If this happens, turn transmitter switch Ⓔ to OFF and then press the ON button of the power supply. The ON button circuit breaker may not lock, if the transmitter switch Ⓔ is at the SEND.

Caution: Never hold the circuit breaker in the ON position. If the circuit breaker does not remain closed when the ON button is released (and the transmitter is at OFF), there is something wrong; an overload condition is present which requires investigation so that it can be removed.

d. Generator GN–58–(*). Two operators are required when using the generator power supply, one to turn the cranks of the generator power supply and the other to operate the receiver-transmitter.

(1) Turn control Ⓔ to SEND.

(2) The operator sits astride the leg seat and rotates the generator cranks in the direction indicated by the arrow appearing next to the crank opening in the side of the generator housing. Do not attempt to rotate the cranks in the reverse direction to that indicated by the arrow, or damage to the generator power supply will be done, which will require a major repair. Satisfactory operation may be obtained if the cranks are turned at a speed of 50 to 70 rpm (revolutions per minute).

(3) The generator power supply cannot supply power to the receiver when control Ⓔ is in the STANDBY position.

e. Battery BA–48. This battery power supply furnishes all necessary power to the receiver and partial power for the transmitter. The battery power supply must be used with the generator power supply when transmitting. In this manner, both the receiver and transmitter can be operated under normal conditions (*f* below).

(1) Turn control Ⓔ to STANDBY.

(2) The battery cannot power the receiver when control Ⓔ is in the SEND position.

f. Generator GN–58–(*) and Battery BA–48. A combination of the generator and battery power supplies can operate the transmitter or receiver when control Ⓔ is in the STANDBY position only. It is only necessary to turn the generator power supply cranks when transmitting because the battery will power the receiver. With this arrangement, the generator power supply does not require the usual full manual energy to turn because it powers only part of the transmitter.

g. Power Supply PP–327(*)/GRC–9Y.

(1) Follow the preliminary starting procedure given in paragraph 45*d*.

(2) Throw the POWER ON-OFF switch to ON; the POWER indicator lamp should glow.

(3) Turn control Ⓔ to either SEND or STANDBY.

h. Power Units PE–162–A, PE–162–B, or PE–162–C. Refer to TM 11–971, for the starting instructions.

Section III. OPERATION OF RECEIVER

47. General

The receiver functions when the power supplies are turned on and when the transmitter OFF-SEND-STANDBY switch, control Ⓔ, is placed as follows:

a. STANDBY Position. Any of the power supplies can be used except the generator power supply. The standby position is used when long periods of listening are required in order to reduce the wattage requirement from the power source.

b. SEND Position. Any of the power supplies (except the battery) can furnish power to the receiver in the SEND position. This position is used when in communication with other sets. The receiver is silenced and the transmitter is turned on when the key or the push-to-talk switch is pressed.

48. Preliminary Starting Procedure for Receiver

a. Turn control Ⓔ on the transmitter to OFF.

b. Install the plug of either the loudspeaker or headset into the PHONES jack of the receiver. Figure 42 shows Headset HS–30–(*) in use.

(1) Set the IMPEDANCE switch located on the rear of the receiver section to 4000 when using the loudspeaker.

(2) Set the IMPEDANCE switch to 250 when using the headset.

Note. If the plug is not in the PHONES jack, the filaments of the receiver tubes will not light.

c. Connect the antenna and, if necessary, connect a ground wire. A change of antenna type may be desired when changing from vehicular to ground operation. Refer to either paragraphs 29, 30, or 31 for the appropriate installation procedure. Turn the ANT. SELECTOR switch, control Ⓐ (par. 42) on the transmitter, as follows:

Antenna	Control Ⓐ position	ANT. binding post connection	GND. binding post connection
Whip	WHIP: 1, 2, 3, or 4	ANT.	Ground or counterpoise.
Long-wire	REEL: 5, 6, 7, or 8	ANT.	Ground or counterpoise optional.
Doublet	DOUBLET: 9, 10, or 11	ANT. and DOUBLET	Not used.

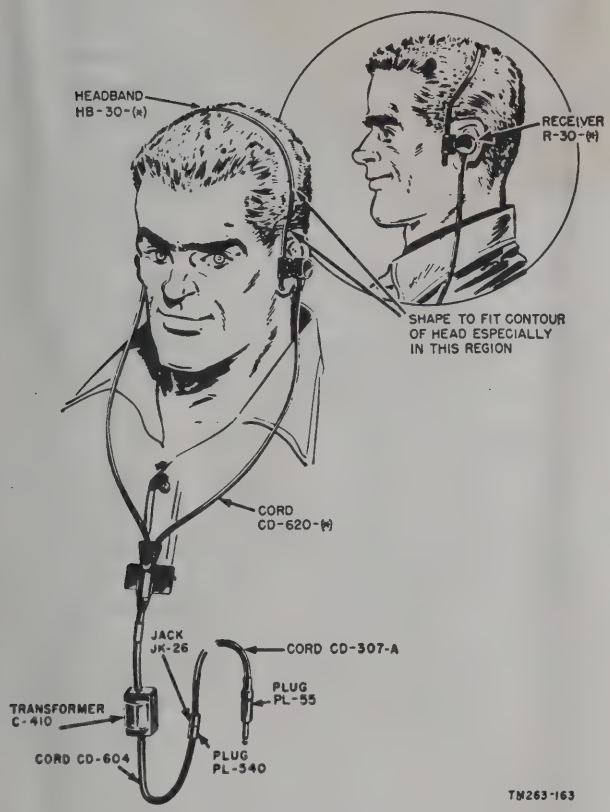

Figure 47. Headset HS–30–(*), in use.

d. Connect Cord CD–1119 between the BATTERY receptacle on the transmitter and the receptacle on Battery BA–48 when using the battery alone or with the generator power supply.

e. Place operation switch control Ⓛ (par. 43) as follows:

(1) *PHONE.* When receiving am or mcw signals.

(2) *C.W.* When receiving cw signals.

(3) *CAL.* When calibration of the receiver dial is desired.

(4) *NET.* When aligning the transmitter frequency (control Ⓘ) to the received signal for net operation. Also for aligning the mo stage (control Ⓗ) of the transmitter when the receiver dial is accurately calibrated.

f. Set band switch control Ⓜ for the desired band of operation.

g. Turn A.F. GAIN control Ⓞ and R.F. GAIN control Ⓟ to their maximum clockwise positions.

Note. If the frequency of the sending station is known, set TUNING control Ⓝ to this frequency.

h. Turn on the switch of the power supply to be used as follows:

(1) *Dynamotor-Power Supply DY–88/GRC–9.* Turn the TRANS & RECEIVE-OFF switch to TRANS & RECEIVE.

(2) *Dynamotor-Power Supply DY–105/GRC–9X.* Turn TRANS RECEIVE-OFF switch to TRANS RECEIVE.

(3) *Vibrator Power Supply PE–237.* Push the ON-OFF switch to ON.

(4) *Power Supply PP–327(*)/GRC–9Y.* Throw the POWER ON-OFF switch to ON.

(5) *Power Unit PE–162–A, PE–162–B, or PE–162–C.* Observe the starting instructions given in TM 11–971.

49. Am Reception

a. Peform the repliminary starting procedure for the receiver.

b. Turn control Ⓛ (par. 43) to PHONE.

c. Turn control Ⓔ (par. 42) on the transmitter as follows:

(1) Turn to STANDBY when using any one of the power supplies, except Generator GN–58–(*).

(2) Turn to SEND when using any of the power supplies, except Battery BA–48. Follow the instructions given in paragraph 46*d*(2) for operation of Generator GN–58–(*).

d. Unlock TUNING dial control Ⓝ and rotate the knob for selection of a modulated signal.

e. Turn controls Ⓞ and Ⓟ counterclockwise for a comfortable listening level in the headset.

50. Mcw Reception

This operation is identical to that in paragraph 49.

51. Cw Reception

This operation is identical to that in paragraph 49 except for the following:

a. Turn control Ⓛ (par. 43) to C.W.

b. Tune for an audible beat note instead of a modulated signal.

Note. If control Ⓝ had been set in advance to the exact frequency of the sending station, no sound may be heard (zero beat). Turn control Ⓝ slightly to the left or right to obtain an audible beat note.

52. Receiver Calibration

This operation is used to check whether the dial reading for TUNING control Ⓝ acutally gives the true frequency to which the receiver is tuned.

a. A 200-kc crystal installed in the receiver supplies a series of crystal-controlled check frequencies against which to check the calibration of the receiver and transmitter. These check frequencies are all harmonics of 200 kc. The calibration check points are 2,000 kc, 2,200 kc, 2,400 kc, and up to 12 mc, thus covering the entire band of the radio set. To check the calibration of the receiver dial, proceed as follows:

(1) Turn control Ⓛ to CAL. (calibrate).

(2) When using any power supply, except the generator power supply, turn control Ⓔ on the transmitter to STANDBY. When using Generator GN–58–(*), turn control Ⓔ to SEND.

(3) Turn control Ⓓ on the transmitter to PHONE. In the PHONE position, the filaments of all the transmitter tubes are not supplied with power and are inoperative unless the microphone push button is pressed.

(4) Turn A.F. GAIN control Ⓞ to the maximum or greatest clockwise position.

(5) Turn R.F. GAIN control Ⓟ to the maximum or greatest clockwise position.

(6) Turn control Ⓜ to BAND 3.

(7) Turn TUNING knob Ⓝ to the lowest frequency check point (2.0 mc). Adjust the TUNING knob until zero beat is obtained on the strongest beat note in the vicinity of the crystal check point. At this point, the dial should read close to the 2.0-mc mark.

(8) After checking the receiver calibration at 2.0 mc, proceed through the entire tuning range on BAND 3, checking the calibration every 200 kc apart such as 2,200, 2,400, 2,600, and up to 3,600 kc.

(9) Turn control Ⓜ to BAND 2 and turn control Ⓝ to 3.6 mc. Check calibration points every 200 kc on BAND 2 up to 6.6 mc.

(10) Turn control Ⓜ to BAND 1 and turn control Ⓝ to 6.6 mc. Check calibration points up to 12.0 mc.

(11) If the calibration is off enough to cause an appreciable error in readings, it may be corrected as described in paragraph 221.

b. If, during calibration, interference from strong signals is being picked up, the antenna lead-in can be disconnected from the ANT. binding post to avoid misleading beats.

53. NET Operation

The NET position of control Ⓛ allows the transmitter to be tuned exactly to any frequency which the receiver is receiving. The NET position is not to be used for normal reception since, at this position, the sensitivity of the receiver is purposely reduced. NET position is to be used only in conjunction with the transmitter, when it is desired to place the receiver-transmitter in a radio communication group or net. For more detailed explanation, refer to paragraph 59.

54. Stopping Procedure

a. Turn control Ⓔ on the transmitter to OFF.

b. Turn off the power supply used as follows:

(1) *Dynamotor-Power Supply DY–88/GRC–9.* Turn the TRANS & RECEIVE-OFF switch to OFF.

(2) *Dynamotor-Power Supply DY–105/GRC–9X.* Turn the TRANS RECEIVE-OFF switch to OFF.

(3) *Vibrator Power Supply PE–237.* Push the OFF button.

(4) *Generator GN–58–(*).* Stop cranking.

(5) *Power Supply PP–327(*)/GRC–9Y.* Throw the POWER OFF-ON switch to OFF.

(6) *Power Unit PE–162–A, PE–162–B, or PE–162–C.* Refer to TM 11–971 for the stopping instructions.

55. Transmitter Operation

a. General. The transmitter functions only when OFF-SEND-STANDBY control, Ⓔ figure 43, is in the SEND position except when using the combination power supply, Battery BA–48 and Generator GN–58–(*). In this special case, the transmitter functions when control Ⓔ is in the STANDBY position. When the key or microphone switch is closed, power is supplied to the transmitter and removed from the receiver. The receiver ceases to function while the transmitter sends out the desired signal. Before the operations of the transmitter are described, the use of the transmitter dial and dial calibration charts will be explained.

b. Dial Reading. The tuning dial associated with FREQ. CONTROL Ⓘ consists of two graduated scales. One is located behind a glass window; the other is marked around the edge of the tuning control knob. The numbers on both of these scales are taken as one reading and they determine the frequency to which the transmitter is tuned. The numbers are not the actual transmitting frequencies but are related to these frequencies by the calibration chart on the transmitter panel. Several dial settings with the corresponding dial readings are shown in figure 48.

Caution: Do not operate the transmitter without the antenna connected except as specifically indicated in paragraph 56*b*(11). Damage to power tube 2E22 will result.

c. Dial Reading Calibration Chart. On the transmitter panel is a dial reading calibration chart (fig. 49), which relates the different frequencies of transmission to the dial settings. This chart will not be the same on the different models of the transmitter. Each set must be tuned by the chart on its panel. Assume that it is desired to transmit on a frequency of 5,540 kc in BAND 2, refer to figure 49, and proceed as follows:

(1) Find 5,500 kc in the FREQ. column of the BAND 2 section. Five columns, each with headings from *+00KC* to *+80KC*, follow this column.

(2) Because the dial setting for 5,540 kc is wanted, the *+40KC* column is the one referred to.

(3) In the small box where lines through 5,500 kc and +40 kc intersect, number 2284 is found. This is the number to which the dial should be set in order to transmit a frequency of 5,540 kc.

d. Unlisted Dial Settings. Sometimes a frequency of transmission will be wanted that is between two listed dial settings on the chart; for instance, in BAND 1 (9,238.5 kc). The following interpolation is necessary:

(1) From the desired frequency (9,238.5 kc), subtract the first calibrated frequency below it (9, 200 kc).

$$\begin{array}{r} 9238.5 \\ -9200 \\ \hline 38.5 \end{array}$$

(2) Find the difference between the dial readings for the frequencies listed just above and just below the desired frequency.

9250 kc has a dial reading of	1932
9200 kc has a dial reading of	—1911
Difference is	21

(3) Multiply the valve obtained in (1) above by that in (2) above.

$$\begin{array}{r} 38.5 \\ \times 21 \\ \hline 385 \\ 770 \\ \hline 808.5 \end{array}$$

(4) Divide this answer ((3) above) by 50 for BAND 1.

Note. When using any frequency in BAND 3 or BAND 2, divide the answer in (3) above by 20, not 50.

$$\begin{array}{r} 16.17 \\ 50\overline{)808.50} \\ 50 \\ \hline 308 \\ 300 \\ \hline 85 \\ 50 \\ \hline 350 \\ 350 \\ \hline 0 \end{array}$$

(5) Add the answer obtained in (4) above to the dial setting corresponding to the first calibrated frequency just be-

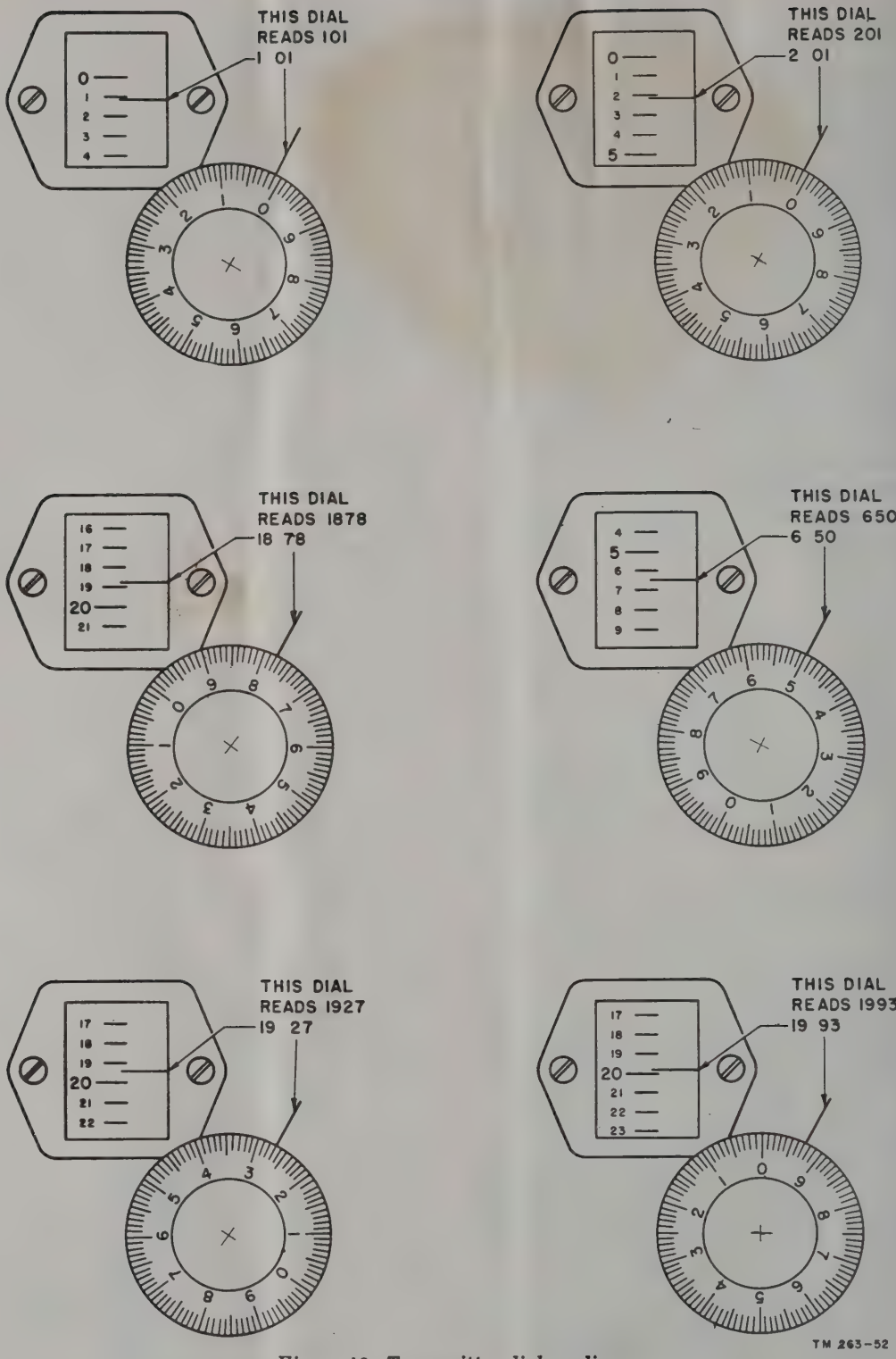

Figure 48. Transmitter dial readings.

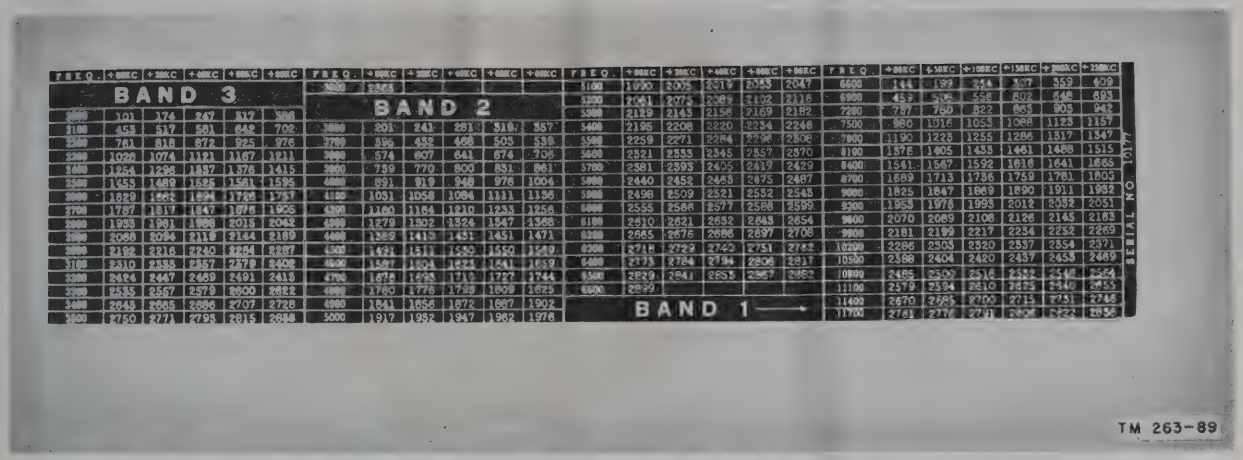

Figure 49. Transmitter dial calibration chart.

low the desired frequency. This answer is the dial setting for the unlisted frequency.

Dial setting for 9200 kc is	1911
Add	+16.17
	1927.17

This 1927.17 corresponds to the desired frequency of 9238.5 kc.

(6) In the actual setting of the dial to this frequency, the dial numbers after the decimal point are not included. The dial setting is shown in the lower left hand corner of figure 48.

56. Master-Oscillator Operation

a. The oscillator section of the transmitter may be either crystal-controlled (XTAL position of control Ⓕ) or a self-sustaining oscillator called a *master oscillator* (MO position of control Ⓕ). The mo (master oscillator) can tune over the entire band, but the transmission frequencies with the crystal oscillator are fixed, depending on the frequencies of the crystals used. The crystal oscillator is more stable however and should be used when there is no necessity of changing rapidly from one frequency to another.

b. To transmit using the mo, proceed as follows:

(1) Connect the antenna, key, microphone, power cables, etc., according to paragraphs 39 and 40.

(2) Set switch Ⓓ to PHONE, MCW, or CW, whichever type of transmission is desired. If low-power emission is desired for short distance range transmission, set the switch to the IO position for that type of transmission.

(3) Set control Ⓕ to the MO position for the desired frequency band.

(4) Release the lock on FREQ. CONTROL knob (control Ⓘ). Turn control Ⓘ to correspond with the transmitting frequency as shown on the calibration chart. If an unlisted frequency is used, interpolate (par. 55*d*) to obtain the correct dial setting.

Note. If the panel lamp has to be lighted in order to see the markings on the drum dial, panel lamp DIAL LIGHT switch Ⓙ, when pressed, illuminates the dial window under the following conditions:

1. All power supplies used except Battery BA–48 as operated by conrtol Ⓔ placed in the SEND position.

2. The key must be closed or the microphone switch pressed when control Ⓓ is placed in PHONE position.

3. When Battery BA–48 is used in conjunction with Generator GN–58–(*) and control Ⓔ placed in STANDBY position.

(5) Turn ANT. SELECTOR switch Ⓐ to the highest numbered position for the type of antenna being used.

(6) Turn the outer lens of INDICATOR Ⓑ until the red dot is adjacent to either red dot on the stationary lens.

Note. The ring-type lens adjustment is provided to vary the amount of light that can be seen from the lamp. When the outer ring

lens is rotated so that its red dot is adjacent to either red dot on the stationary lens, maximum light is permitted to penetrate the lenses. When the red dot on the outer lens is exactly between the two stationary red dots, no light emerges through the lenses. The latter position of INDICATOR Ⓑ is used for blackout conditions as a precautionary measure.

(7) Turn switch Ⓔ to SEND when using any of the power supplies available. If Generator GN–58–(*) is to be used with Battery BA–48, turn switch Ⓔ to STANDBY.

(8) Turn control Ⓛ on the receiver to PHONE or C.W. position so that the sidetone can be heard.

(9) Release the dial lock on ANTENNA TUNING control Ⓒ. Press the button on the microphone or close the key and rotate control Ⓒ until INDICATOR Ⓑ glows at its maximum intensity. This indicates *resonance* or matching of the antenna to the transmitter.

(10) If the indicator does not glow through a complete sweep of knob Ⓒ, turn ANT. SELECTOR knob Ⓐ to the next lower number. Rotate knob Ⓒ again until maximum glow is seen. If there is still no glow, repeat with knob Ⓐ.

(11) If the indicator glows with more than one setting of knob Ⓐ, always use the highest numbered position of this switch at which the indicator will glow. When using a long-wire antenna, it is sometimes difficult to see any indication of resonance on INDICATOR Ⓑ when control Ⓒ is tuned through resonance. In that case, temporarily remove the antenna lead from the antenna binding post; adjust control Ⓒ to give maximum INDICATOR glow, then reconnect the antenna lead and proceed with normal operation. Be sure that the jumpers in the antenna are connected correctly for the selected frequency of operation, according to the instructions on the antenna chart attached to the lead-in wire. When the antenna lead-in is reconnected, it will probably be necessary to readjust control Ⓒ for maximum brilliance if necessary.

Caution: When tuning for an indication of resonance, never leave the transmitter on more than 15 seconds with the antenna lead disconnected from the ANT. binding post.

(12) When the tuning procedure is completed, lock controls Ⓘ and Ⓒ in place.

(13) Adjust SIDE TONE VOL. control Ⓖ for the desired volume level in the headset.

c. To operate the microphones, follow the procedure given below:

(1) *Microphone T–17.* To operate Microphone T–17, hold it close to the lips, press the button on the handle, and speak in a loud, clear voice. Hold the button until finished talking, then release the button to listen for the reply.

(2) *Microphone T–45.*

(*a*) Microphone T–45 is held in front of the mouth by a harness that can be adjusted for comfort. The plug of Microphone T–45 connects to a corresponding receptacle on Cord CD–318–A. This cord leads to Switch SW–141, which is hung on the chest by means of a strap that fits around the neck. Then the cord emerges from the switch box and terminates in Plug PL–68 which fits into the MIKE jack on the transmitter. Figure 50 shows Microphone T–45 in use.

(*b*) Switch SW–141 is pressed to transmit and is released when changing from transmit to receive. A switch lock is provided to keep the switch turned on permanently during transmission so the operator can use both hands.

Caution: About 2 seconds are required for the tubes to heat properly each time the microphone switch is pressed. Wait 2 seconds after pressing the switch before talking. Always release the switch *immediately* after transmitting, because no reply can be heard from the recevier with the switch closed.

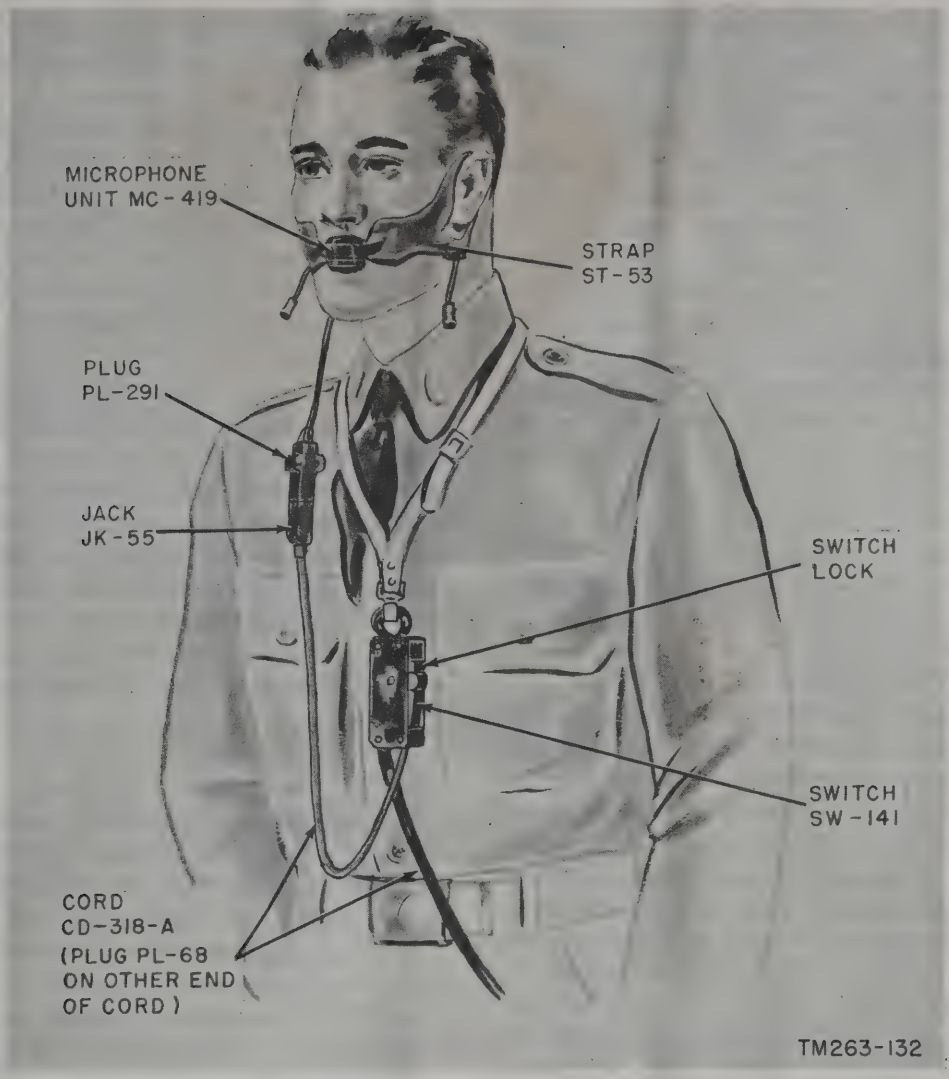

Figure 50. Microphone T–45, in use.

57. Crystal Operation

To insert, or change crystals, refer to paragraph 32*b*(5). A sample CRYSTALS chart is given below for a particular transmitter. This chart will be used as an example in the following procedure for XTAL operation.

CRYSTALS

Number	Freq. kcs	Dial
1A	6,600	180
1B	6,000	2515
2A	3,600	191
2B	3,720	420
3A	2,000	104
3B	2,100	455

Note. The dial numbers will be slightly different in each transmitter unit. Refer to the calibration chart on the individual transmitters for the correct dial numbers.

a. Follow the procedures given in paragraph 56, except for the steps in paragraph 56*b*(4) and substitute the following:

(1) Assuming BAND 3A, the 2X frequency is 2,000 kc and the dial setting written on the CRYSTALS chart is found to be 104.

(2) Unloosen the lock on control Ⓘ and set the control to 104 on the tuning dial.

b. If the calibration of the transmitter is off in the above procedure, the radio set may not operate. Rotate control Ⓘ above and below its original setting (104 in this case) while holding down the key and observe INDICATOR Ⓑ. The correct setting will correspond to the

brightest glow of INDICATOR Ⓑ. A slight retuning of control Ⓒ may be necessary if control Ⓘ is changed. If the calibration is too far off, calibrate the transmitter (par. 58).

c. The crystal oscillator section of the transmitter may be checked for operation as follows:

(1) Set the receiver control Ⓛ to NET.

(2) Adjust the receiver to the transmitted frequency, rocking the receiver dial knob Ⓝ slightly to both sides of the desired frequency, while listening for a strong signal (beat note). If a beat note is not heard close to the expected frequency, the crystal is not operating.

(3) It is then necessary either to use a spare crystal at the same frequency, or to shift over to mo operation (par. 56).

58. Transmitter Calibration

It is important to know if the transmitter actually transmits on the frequencies corresponding to the dial settings on the calibration chart. Thus, if it is desired to send a signal of approximately 5,500 kc, the FREQ. CONTROL knob Ⓘ is set at the appropriate setting. When this setting is made, the calibration operation assures that the transmitter will send a signal of 5,500 kc. This is accomplished by first accurately calibrating the receiver and then by feeding a reduced signal output of the transmitter into the receiver. The procedure is as follows:

a. First calibrate the receiver (par. 52). The selected calibration frequency of the receiver must be some multiple of 200 kc, which is closest to the desired signal output of the transmitter. Assume that a transmitter signal of 5,835 kc is desired. The receiver should first be calibrated at 5,800 kc and not at 5,835 kc, because receiver calibration is accomplished by using the harmonics of a 200-kc crystal.

b. Turn control Ⓕ to MO for the band being used.

c. From the transmitter calibration chart, determine the dial setting corresponding to the calibration check frequency and turn FREQ. CONTROL knob Ⓘ to that dial setting.

d. Turn control Ⓛ on the receiver to the NET position.

e. Set control Ⓓ on the transmitter to MCW or CW. Do not set it to PHONE because calibration will be impossible in that position.

f. Turn control Ⓔ to SEND if Generator GN–58–(*) is used alone, or if any other of the power supplies is used. Turn control Ⓔ to STANDBY if Battery BA–48 is used with the generator power supply.

g. Turn A.F. GAIN control Ⓞ and R.F. GAIN control Ⓟ on the receiver to their mid-position settings.

h. Adjust OSC. CAL. CONTROL Ⓗ on the transmitter with a screw driver until a beat note heard in the headset stops, and then starts again. The place where the silent point (zero beat) appears is where control Ⓗ should be set. This corrects the calibration for that particular frequency, and all other frequencies within that band also will be correct.

i. To restore the receiver and transmitter to normal operation, turn control Ⓛ to C.W. or PHONE.

59. Net Operation

In operation, all transmitters and receivers are tuned to the same frequency. To be sure that the transmitter is tuned to the same frequency as the receiver, proceed as follows:

a. With Radio Set AN/GRC–9(*) set up for operation, turn switch Ⓔ to the SEND or STANDBY position depending on the power supply being used (par. 58*f*).

b. Receive the desired signal with the receiver TUNING control Ⓛ on either PHONE or C.W. and lock the tuning dial at this frequency point.

c. Observe the frequency of the net control station and, referring to the transmitter calibration chart, adjust the transmitter FREQ. CONTROL dial Ⓘ to the approximate frequency.

Note. If an end-feed long-wire antenna is being used, make certain that the proper antenna jumpers are closed and that the transmitting antenna is matched to the transmitter (par. 56*b*(9)).

d. Turn switch Ⓛ on the receiver to the NET position.

e. Turn switch Ⓓ on the transmitter to MCW or CW. Do not place switch Ⓓ on PHONE because it will be impossible to tune the transmitter to the receiver frequency.

f. Tune the transmitter FREQ. CONTROL Ⓘ until the strongest beat note is heard in the headset.

g. Adjust FREQ. CONTROL Ⓘ on the transmitter until a condition of zero beat is obtained.

Caution: During the entire process of tuning the transmitter to the receiver, do not press the key or microphone button because this will cause the transmitter to have full output, and the station that the receiver is receiving will be blocked out.

h. After the zero beat is found, lock the tuning knob of FREQ. CONTROL Ⓘ.

i. Turn control Ⓓ on the transmitter to PHONE, MCW, or CW, whichever type of transmission is desired.

j. Turn control Ⓛ on the receiver to PHONE or C.W., whichever type of reception is obtained from the other net stations.

60. Antijamming

a. If reception is jammed by enemy signal, promptly notify the immediate superior officer. Do not stop operating the radio set. In many cases, a usable signal may be received through enemy jamming interference if the correct procedure is followed. Under no condition allow the radio set to close down because of enemy jamming. Continue to operate as well as possible. In this way the enemy has no way of determining how effective his jamming is.

b. Reception. For reception of signals that are jammed by cw, fm, bagpipes, pulses, or other types of noise, proceed as follows until signal read-through is established:

(1) Slowly rotate TUNING control Ⓝ through several degrees on either side of the desired signal. This may separate the desired signal from the jamming signal.

(2) Orient the antenna at various angles or change antennas. This procedure may favor the polarization of the desired signal, and is especially recommended for the higher frequencies.

(3) If the steps given in (1) and (2) above are inadequate, change the direction, length, and height of the antenna. This method is recommended for the higher frequencies.

(4) If possible, locate the receiver with a tree, earth mound, or truck between the antenna and the jamming signal to possibly reduce the strength of the jamming signal. This will have to be tried experimentally such as moving the receiver in a circle around the tree to find the best place of reception.

(5) If the steps given in (1) through (4) above do not provide a satisfactory signal, request a change of frequency and call sign.

(6) Turn control Ⓛ to C.W. on am reception and listen for a steady beat note of the desired carrier to be received. When the beat note stops, send a signal so the enemy will think the message got through. Request the use of cw transmission if the am reception is jammed.

(7) If the steps given in (1) through (6) above do not provide a satisfactory signal, request a change of frequency and call sign.

(8) If the jamming is so complete and effective that alternate frequencies do not permit communications by radio, use some other method to get the message through while still operating.

(9) Continue to operate. Do not let the enemy know his jamming is effective. This keeps the jamming equipment tied down to what the enemy believes is an active frequency.

61. Stopping Procedure

For any type of transmission or reception, the stopping procedure for the transmitter and receiver is exactly the same. Refer to paragraph 54 for this procedure.

CHAPTER 4
ORGANIZATIONAL MAINTENANCE

Section I. ORGANIZATIONAL TOOLS, MATERIALS, AND TEST EQUIPMENT

62. Tools, Materials, and Test Equipment Required

The following tools, materials, and test equipment are required for organizational maintenance procedures.

a. Tools. Tool Equipment TE–41.

b. Materials. Moisture and Fungus Proofing Kit MK–2/GSM. Cleaning Compound (Federal stock No. 7930–395–9542).

c. Test Equipment. A common usage name is indicated after each component.

Nomenclature	Common name	TM No.
Electron Tube Test Set TV–7/U.	Tube tester	TM 11–5083
Multimeter TS–297/U	Multimeter	TM 11–5527

63. Special Tools Supplied

The special tools supplied with the radio set are found in Box BX–53 or in the consolidated receiver-transmitter package. The use of these tools is described below.

a. Tube Puller. This tool is used to remove the miniature tubes used in the radio set (fig. 31).

b. Dial Light Puller. This tool is used for removing and replacing the small dial illuminating lights located behind the transmitter and receiver front panels (fig. 32).

c. Bristo (Fluted) Socket Wrenches. These tools are used to remove the tuning knobs on the receiver-transmitter front panel. In early models, a No. 6 wrench is used and in the late models, a No. 8 wrench is used.

d. Allen Wrench No. 8. This tool is used to fit into a No. 8 Allen-type socket headless set screw and a No. 4 socket head cap screw. The knob on VOLTAGE CHANGE SWITCH, located in the vibrator power supply, has a socket head set screw. This wrench is located inside the case of Vibrator Power Supply PE–237.

Note. The tube puller and Bristo wrenches are not supplied in later models of the radio set because these tools are part of Tool Equipment TE–41.

64. Special Tool not Supplied (fig. 51)

a. Use a shorting stick to discharge the power supply filter capacitors before performing preventive maintenance or trouble shooting. Normally, when the power is turned off, capacitors in the equipment will discharge to ground through bleeder resistors or voltage dividers. If the discharge network should fail, the capacitors can remain charged after the power is turned off. Contact with a charged capacitor might result in severe burns and shock. Shorting capacitors with a shorting stick prevents such accidents.

b. If a shorting stick is not available, make one as follows:

(1) Get a hardwood dowel approximately ½ inch in diameter and 15 inches long.

(2) Drill a ⅛-inch hole in one end of the dowel to a depth of 2 inches.

(3) Press-fit a 3-inch piece of copper or brass bus wire into the hole as far as it will go.

(4) Solder one end of a 36-inch piece of No. 10 flexible stranded wire or equivalent to the bus wire as close to the dowel as possible.

(5) Attach a battery clamp to the other end of the wire.

(6) Apply several layers of friction tape over the soldered connection at the

bus wire, leaving approximately ½ inch of the bus wire bare.

(7) Continue the tape down over the dowel for a distance of 2 inches.

(8) Form an insulated handle for the shorting stick by winding two layers of rubber tape and two layers of friction tape around the other end of the dowel for a distance of 6 inches.

c. The power supply filter capacitors can be discharged indirectly by using the safety shorting stick after the power is turned off as follows:

(1) Connect the battery clamp to a known chassis ground.

(2) Hold the safety shorting stick by the insulated handle and touch either the cap of transmitter tube 2E22 or pin 32 of the power receptacles with CD-1086 disconnected from the power supplies as follows:

Power receptacle reference No.	Power Supply
734	Vibrator Power Supply PE–237.
240	Generator GN–58–(*).
J202	Dynamotor-Power Supply DY–88/GRC–9.
J2	Dynamotor-Power Supply DY–105/GRC–9X.
J1	Power Supply PP–237(*)/GRC–9Y.

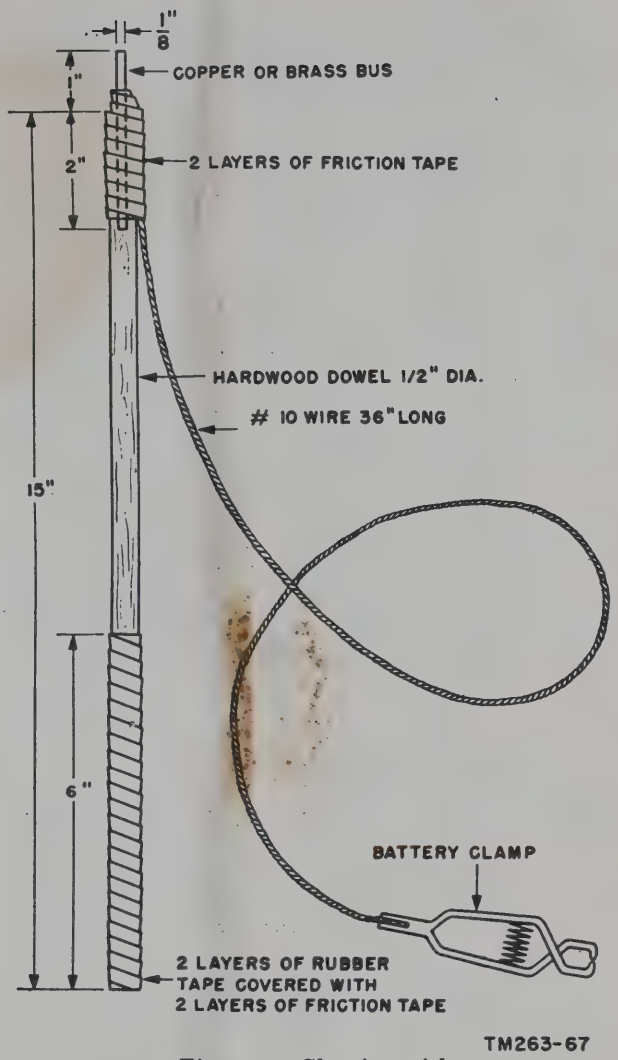

Figure 51. Shorting stick.

Section II. REMOVAL OF PLUCK-OUT COMPONENTS

65. Receiver-Transmitter Sections

Remove the receiver-transmitter sections as instructed in paragraph 32 and remove the tube shield covers by releasing all retaining springs and then lifting the cover straight up without tilting it.

a. Precautions. Before attempting removal of the pluck-out items, observe the following:

(1) Wait until the tubes are cool.

(2) Be sure that all power cables to the receiver-transmitter are removed. Dangerous voltages exist in this equipment. The plate cap on power amplifier tube V103 (2E22) has 500 volts on it regardless of the position of the handkey. Use the safety shorting stick between the plate cap and chassis ground.

(3) Some of the transmitter tubes look exactly like the receiver tubes. When replacing the receiver and transmitter tubes, be sure not to mistake the transmitter tubes marked 3A4 with those of the receiver tubes. If a receiver tube is placed in a transmitter socket, it will burn soon after the power is turned on.

b. Tubes and Lamps.

(1) *Miniature tubes.* To remove a tube, slide the tube puller over the tube envelope

(fig. 31). Pull upward on the tool to remove the tube. After the tube has been removed from its socket, remove the tube from the tube puller by pushing the tube towards the handle.

(2) *Transmitter tube 2E22.* Be sure to remove the plate cap first and then remove the tube by pulling it out straight upwards.

(3) *Regulator tube VR105.* This tube can be removed by opening the safety clamp around the base of the tube. The clamp may be opened very easily by inserting a screw driver tip in the small slot on the clamping lever and by twisting the screw driver counterclockwise slowly.

(4) *Tube replacements.* For tube replacements, line up the blank space on the tube with the blank space in the socket before attempting to insert the tube into the socket. A tube layout is given on one side of the receiver and the tube markings are also given on the tube shield cover assemblies.

(5) *Receiver dial lamp.* The lamp may be removed by using the dial lamp puller (fig. 32). Also remove the dial lamp from the puller by pulling on the glass bulb and not the brass bayonet pin base.

(6) *Transmitter dial lamp.* The transmitter dial light (I 102) is located between the main tuning capacitor and the panel (fig. 121), and consequently cannot be replaced from the back. To replace the lamp, proceed as follow:

(*a*) Remove the two screws that hold the frame, dial window, and gasket in front of the dial knob, control ①. Note that the left screw is longer than the right one.

(*b*) Remove the dial light through the opening by using the dial lamp puller.

(*c*) To insert the lamp, reverse the procedure. After replacement, be sure that the window, frame, and gasket make the unit watertight by tightening up on the screws.

(7) *Neon indicator bulb.* Remove the indicator Polaroid lenses by grasping the fixed section (the ring nearest the transmitter panel as shown in fig. 26) and unscrew it by turning counterclockwise, as with an ordinary screw. When the lenses are removed, the top of the neon bulb is exposed. The bulb can be removed from its bayonet type socket by pressing it in gently with the pilot lamp puller and twisting it in a counterclockwise direction. Tilt the transmitter panel slightly and the bulb will fall out. To replace the neon lamp, reverse the above procedure, making sure that the Polaroid lenses are screwed back on tightly.

c. Bias Cell Battery BT1 (fig. 31). Loosen the ring clamp that holds the bias cell in its socket. Pull the unit straight up for removal. In earlier models, the bias cell was not a pluck-out item.

d. Crystals.

(1) *Receiver.* There is only one crystal to be removed (fig. 31). To remove the crystal, insert a screw driver between bias cell BT1 and capacitor C55 and gently pry the crystal upward and, at the same time, pull it with the fingers.

(2) *Transmitter.* There are six crystals to be removed. No special instructions are required for their removal.

e. Reassembling Receiver-Transmitter Sections. Replace the tubes, pilot light, and neon indicator in their proper sockets. Do not mistake the receiving tubes for the transmitting tubes. When replacing the transmitting crystals, be sure that they are put into the sockets in accordance with the information given in the CRYSTALS chart on the transmitter front panel. Carefully replace the tube and crystal cover plates. To reassemble the receiver-transmitter into its case, refer to paragraph 32*b* (6).

66. Power Supplies

a. Dynamotor-Power Supply DY–88/GRC–9. To remove pluck-out items on the dynamotor power supply, remove the cover from the case by loosening the eight Dzus fasteners on the outside of the front panel and proceed as follows:

(1) Vibrator E201 and ballast tubes (thermal resistors) R208 through R210 are located toward the left rear of the

chassis (fig. 141). Vibrator E201 and ballast resistors R208 and R209 can be removed without further disassembly.

(2) Ballast resistor R210 is covered with a cylindrical shield. The shield is removed by twisting it in a counterclockwise direction and then pulling it straight up off the tube. Ballast resistor R210 then can be removed without difficulty.

b. Dynamotor-Power Supply DY–105/GRC–9X. To remove pluck-out parts on the dynamotor power supply, remove the chassis from the case by loosening the eight Dzus fasteners on the outside of the front panel and proceed as follows:

(1) Vibrator G1 and ballast tubes (thermal resistors) RT2 and RT3 are located in the center of the chassis (fig. 145). Vibrator G1 and ballast tubes RT2 and RT1 can be removed without further disassembly.

(2) Ballast tube RT3 is covered with a cylindrical shield. The shield is removed by twisting it in a counterclockwise direction and pulling it straight up off the tube. Ballast tube RT3 may then be removed without difficulty.

c. Vibrator Power Supply PE–237.

(1) To remove the vibrator units in the power supply, take off the top cover to expose the upper side of the chassis (fig. 133). Vibrators VB1 and VB16 then can be removed without further disassembly.

(2) Tube 1006 is located under a shield can, which is first removed by twisting it in a counterclockwise direction and by pulling it straight up off the tube. The tube then can be removed without any difficulty.

(3) Tube 1005 is held to the chassis by a clamp that fits partly around the base of the tube. The clamp is screwed to the chassis. Loosen the retaining screw and slide the clamp back off the base of the tube. The tube then can be lifted out without difficulty. The spare tube 1005 also is secured to the chassis in this manner.

d. Generator GN–58–(*). To remove the top cover, proceed as follows:

(1) Remove the cover clamp lock screws (on models that contain them) that fasten the cover clamps to the side of the housing.

(2) Open the cover clamps.

(3) Lift the top of the housing straight up. Figure 126 shows the generator power supply with the cover removed.

e. Power Supply PP–327/GRC–9Y or PP–327A/GRC–9Y. Refer to TM 11–5070 for the instructions in removing the pluck-out items.

f. Power Unit PE–261–A, PE–162–B, or PE–162–C. Refer to TM 11–971 for the instructions in removing the pluck-out items.

Section III. PREVENTIVE MAINTENANCE SERVICES

67. Definition of Preventive Maintenance

Preventive maintenance is work performed on equipment (usually when the equipment is not in use) to keep it in good working order so that breakdowns and needless interruptions in service will be kept to a minimum. Preventive maintenance differs from troubleshooting and repair since its object is to prevent certain troubles from occurring.

68. General Preventive Maintenance Techniques

a. Use No. 000 sandpaper to remove corrosion.

b. Use a clean, dry, lint-free cloth or a dry brush for cleaning. If necessary, except for electrical contacts, moisten the cloth or brush with cleaning compound; then wipe the parts dry with a cloth. If the part cleaned is normally lubricated, relubricate in accordance with the instructions given in paragraphs 73 and 74.

Warning: Prolonged breathing of cleaning compound fumes is dangerous. Make certain adequate ventilation is provided. Cleaning compound is flammable; do not use it near a flame.

c. Use the safety shorting stick before touching components in the transmitter or power supplies.

d. Whenever a loose connection is tightened,

OPERATOR FIRST ECHELON MAINTENANCE CHECK LIST FOR SIGNAL CORPS EQUIPMENT

RADIO COMMUNICATION, DIRECTION FINDING, CARRIER, RADAR

INSTRUCTIONS: See other side

EQUIPMENT NOMENCLATURE	EQUIPMENT SERIAL NO.
RADIO SET AN/GRC-9 (XJ)	

LEGEND FOR MARKING CONDITIONS: ✓ Satisfactory; X Adjustment, repair or replacement required; (X) Defect corrected.
NOTE: Strike out items not applicable.

DAILY

NO.	ITEM	CONDITION S	M	T	W	T	F	S
1	COMPLETENESS AND GENERAL CONDITION OF EQUIPMENT *(receiver, transmitter, ~~carrying cases~~, wire and cable, microphones, tubes, spare parts, ~~technical~~ manuals and accessories).* PAR. 71a(1)							
2	LOCATION AND INSTALLATION SUITABLE FOR NORMAL OPERATION. PAR. 71a(2)							
3	CLEAN DIRT AND MOISTURE FROM ANTENNA, MICROPHONE, HEADSETS, ~~HECTOGRAPH~~, KEYS, JACKS, PLUGS, ~~TELEPHONES~~, CARRYING BAGS, COMPONENT PANELS. PAR. 71a(3)							
4	INSPECT SEATING OF READILY ACCESSIBLE "PLUCK-OUT" ITEMS: ~~TUBES, LAMPS, CRYSTALS~~, FUSES, CONNECTORS, ~~VIBRATORS~~, ~~PLUG-IN COILS AND RESISTORS~~. PAR. 71a(4)							
5	INSPECT CONTROLS FOR BINDING, SCRAPING, EXCESSIVE LOOSENESS, ~~WORN OR CHIPPED GEARS~~, MISALIGNMENT, POSITIVE ~~ACTION~~. PAR. 71a(5)							
6	CHECK FOR NORMAL OPERATION. PAR. 71a(6)							

WEEKLY

NO.	ITEM	CONDITION	NO.	ITEM	CONDITION
7	CLEAN AND TIGHTEN EXTERIOR OF COMPONENTS AND CASES, ~~PANEL MOUNTS~~, SHOCK MOUNTS, ANTENNA MOUNTS, ~~COAXIAL TRANSMISSION LINES, WAVE GUIDES~~, AND CABLE CONNECTIONS.		13	~~INSPECT STORAGE BATTERIES FOR DIRT, LOOSE TERMINALS, ELECTROLYTE LEVEL AND SPECIFIC GRAVITY, AND DAMAGED CASES.~~	
8	INSPECT CASES, MOUNTINGS, ANTENNAS, ~~TOWERS~~, AND EXPOSED METAL SURFACES, FOR RUST, CORROSION, AND MOISTURE. PAR. 71b(1)		14	CLEAN ~~AIR FILTERS, GRACE~~ NAME PLATES, DIAL ~~AND METER~~ WINDOWS, ~~JEWEL ASSEMBLIES~~.	
9	INSPECT CORD, CABLE, WIRE, AND SHOCK MOUNTS FOR CUTS, BREAKS, FRAYING, DETERIORATION, KINKS, AND STRAIN.		15	INSPECT ~~METERS~~ FOR DAMAGED GLASS ~~AND CASES~~.	
10	INSPECT ANTENNA FOR ~~CORRUGATIONS~~, CORROSION, LOOSE FIT, DAMAGED INSULATORS ~~AND REFLECTORS~~. PAR. 71b(2)		16	~~INSPECT SHELTERS AND COVERS FOR ADEQUACY OF WEATHER PROOFING.~~	
11	INSPECT CANVAS ITEMS, ~~LEATHER~~, AND CABLING FOR MILDEW, TEARS, AND FRAYING.		17	CHECK ANTENNA GUY WIRES FOR LOOSENESS AND PROPER TENSION.	
12	INSPECT FOR LOOSENESS OF ACCESSIBLE ITEMS: SWITCHES, KNOBS, JACKS, CONNECTORS, ELECTRICAL TRANSFORMERS, ~~POWER STATS~~, RELAYS, ~~SOLENOID, MOTORS, BLOWERS~~, CAPACITORS, GENERATORS, AND PILOT LIGHT ASSEMBLIES. PAR. 71b(3)		18	CHECK TERMINAL BOX COVERS FOR ~~CRACKS, LEAKS~~, ~~DAMAGED GASKETS~~, DIRT AND GREASE.	

19 IF DEFICIENCIES NOTED ARE NOT CORRECTED DURING INSPECTION, INDICATE ACTION TAKEN FOR CORRECTION.

DA FORM 1 MAY 51 11-238 REPLACES DA AGO FORM 419, 1 DEC 50, WHICH IS OBSOLETE.

TM 263-151

Figure 52. DA Form 11–238.

SECOND AND THIRD ECHELON MAINTENANCE CHECK LIST FOR SIGNAL CORPS EQUIPMENT

RADIO COMMUNICATION, DIRECTION FINDING, CARRIER, RADAR

INSTRUCTIONS: See other side

EQUIPMENT NOMENCLATURE: RADIO SET AN/GRC-9 (*)

EQUIPMENT SERIAL NO.

LEGEND FOR MARKING CONDITIONS: ✓ Satisfactory; X Adjustment, repair or replacement required; ⓧ Defect corrected.
NOTE: Strike out items not applicable.

NO	ITEM	CONDITION
1	COMPLETENESS AND GENERAL CONDITION OF EQUIPMENT (*receiver, transmitter, carrying cases, wire and cable, microphones, tubes, spare parts, ~~technical manuals~~ and accessories*). PAR. 71a(1)	
2	LOCATION AND INSTALLATION SUITABLE FOR NORMAL OPERATION. PAR. 71a(2)	
3	CLEAN DIRT AND MOISTURE FROM ANTENNA, MICROPHONE, HEADSETS, ~~CHESTSETS~~, KEYS, JACKS, PLUGS, ~~CRYSTALS~~, CARRYING BAGS, COMPONENT PANELS. PAR. 71a(3)	
4	INSPECT SEATING OF READILY ACCESSIBLE "PLUCK-OUT" ITEMS: TUBES, LAMPS, CRYSTALS, FUSES, CONNECTORS, VIBRATORS, ~~BUILT-IN COILS AND RESISTORS~~. PAR. 71a(4)	
5	INSPECT CONTROLS FOR BINDING, SCRAPING, EXCESSIVE LOOSENESS, WORN OR CHIPPED GEARS, MISALIGNMENT, POSITIVE ACTION. PAR. 71a(5)	
6	CHECK FOR NORMAL OPERATION. PAR. 71a(6)	
7	CLEAN AND TIGHTEN EXTERIOR OF COMPONENTS AND CASES, RACK MOUNTS, SHOCK MOUNTS, ANTENNA MOUNTS, ~~CRYSTAL TRANSMISSION LINES, GUIDES~~, AND CABLE CONNECTIONS.	
8	INSPECT CASES, MOUNTINGS, ANTENNAS, ~~TOWERS~~, AND EXPOSED METAL SURFACES, FOR RUST, CORROSION, AND MOISTURE. PAR. 71b(1)	
9	INSPECT CORD, CABLE, WIRE, AND SHOCK MOUNTS FOR CUTS, BREAKS, FRAYING, DETERIORATION, KINKS, AND STRAIN.	
10	INSPECT ANTENNA ~~AND CONSTRUCTION~~, CORROSION, LOOSE FIT, DAMAGED INSULATORS ~~AND REFLECTORS~~. PAR. 71b(2)	
11	INSPECT CANVAS ITEMS, ~~COVERS~~, AND CABLING FOR MILDEW, TEARS, AND FRAYING.	
12	INSPECT FOR LOOSENESS OF ACCESSIBLE ITEMS: SWITCHES, KNOBS, JACKS, CONNECTORS, ELECTRICAL TRANSFORMERS, ~~POTENTIOMETERS~~, RELAYS, ~~BEARINGS, SHAFTS, BUSHES~~, CAPACITORS, GENERATORS, AND PILOT LIGHT ASSEMBLIES. PAR. 71b(3)	
13	~~INSPECT SOLENOID CONTACTORS FOR DIRT, LOOSE TERMINALS, ELECTROLYTE LEVEL AND SPECIFIC GRAVITY, AND DAMAGED CASES.~~	
14	CLEAN ~~AND PAINTED~~ NAME PLATES, DIAL ~~AND METER~~ WINDOWS, ~~GENERAL CONDITION~~.	
15	INSPECT METERS FOR DAMAGED GLASS AND CASES.	
16	~~INSPECT SHELTERS AND COVERS FOR ADEQUACY OF WEATHERPROOFING.~~	
17	CHECK ANTENNA GUY WIRES FOR LOOSENESS AND PROPER TENSION.	
18	CHECK TERMINAL BOX COVERS FOR ~~BRACKET, LEADS, DAMAGED GASKETS~~, DIRT AND GREASE.	
19	ELECTRON TUBES - INSPECT FOR LOOSE ~~ENVELOPES~~, CAP CONNECTORS, ~~BROKEN SOCKETS~~ INSUFFICIENT SOCKET SPRING TENSION; ~~CLEAN DUST AND DIRT ENVELOPES~~ ~~CHECK CONDITION OF RECEIVING TUBE TUBES~~. PAR. 71c(1)	
20	~~INSPECT FILM CUT OUTS FOR LOOSE PARTS, DIRT, MISALIGNMENT AND CORROSION.~~	
21	INSPECT FIXED CAPACITORS FOR LEAKS, BULGES, ~~AND DISCOLORATION~~.	
22	INSPECT RELAY AND CIRCUIT BREAKER ASSEMBLIES FOR LOOSE MOUNTINGS; BURNED, PITTED, CORRODED CONTACTS; MISALIGNMENT OF CONTACTS AND SPRINGS; INSUFFICIENT SPRING TENSION; BINDING OF PLUNGERS AND HINGE PARTS. PAR. 71c(2)	
23	INSPECT VARIABLE CAPACITORS FOR DIRT, MOISTURE, MISALIGNMENT OF PLATES, AND LOOSE MOUNTINGS. PAR. 71c(3)	
24	INSPECT RESISTORS, BUSHINGS, AND INSULATORS, FOR CRACKS, CHIPPING, BLISTERING, DISCOLORATION AND MOISTURE. PAR. 71c(4)	
25	INSPECT TERMINALS OF LARGE FIXED CAPACITORS AND RESISTORS FOR CORROSION, DIRT AND LOOSE CONTACTS.	
26	CLEAN AND TIGHTEN SWITCHES, TERMINAL BLOCKS, ~~BLOWERS~~, RELAY ~~CASES~~, AND INTERIORS OF CHASSIS AND CABINETS NOT READILY ACCESSIBLE.	
27	INSPECT TERMINAL BLOCKS FOR LOOSE CONNECTIONS, CRACKS AND BREAKS.	
28	~~CHECK SETTINGS OF ADJUSTABLE RELAYS.~~	
29	LUBRICATE EQUIPMENT ~~IN ACCORDANCE WITH APPLICABLE~~ ~~DEPARTMENT OF THE ARMY LUBRICATION ORDER~~. PAR. 71c(5)	
30	INSPECT GENERATORS, ~~MOTORS~~, DYNAMOTORS, FOR BRUSH WEAR, SPRING TENSION, ARCING, ~~AND SETTING OF COMMUTATOR~~. PAR. 71c(6)	
31	CLEAN AND TIGHTEN CONNECTIONS AND MOUNTINGS FOR TRANSFORMERS, CHOKES, POTENTIOMETERS, ~~AND RHEOSTATS~~.	
32	INSPECT TRANSFORMERS, CHOKES, POTENTIOMETERS, ~~AND RHEOSTATS~~ FOR OVERHEATING ~~AND OIL LEAKAGE~~.	
33	BEFORE SHIPPING OR STORING - REMOVE BATTERIES.	
34	~~INSPECT CATHODE RAY TUBES FOR BURNT SCREEN SPOTS.~~	
35	INSPECT BATTERIES FOR SHORTS AND DEAD CELLS.	
36	INSPECT FOR LEAKING WATERPROOF GASKETS, WORN OR LOOSE PARTS.	
37	MOISTURE AND FUNGIPROOF.	
38	IF DEFICIENCIES NOTED ARE NOT CORRECTED DURING INSPECTION, INDICATE ACTION TAKEN FOR CORRECTION.	

DA FORM 1 MAY 51 11-239 REPLACES DA AGO FORM 419, 1 DEC 50, WHICH IS OBSOLETE. ~~40-10-44383-1~~

TM263-152

Figure 53. DA Form 11-239.

it should be moisture-fungiproofed by applying the varnish with a small brush.

e. When performing organizational maintenance, the operator should not disassemble the equipment except as instructed below:

(1) Remove the chassis and their cover plates should be removed in the receiver-transmitter sections.

(2) Take off the top covers and the spare parts compartment covers should be removed in the dynamotor power supplies.

f. When performing organizational maintenance, the repairman may disassemble the equipment as described in *e*(1) and (2) above, as well as removing the top cover of the generator power supply.

69. Use of First Echelon Preventive Maintenance Forms (fig. 52)

a. DA Form 11–238 is a preventive maintenance check list to be used by the operator as directed.

b. Items that do not apply to the radio set are lined out on figure 52. References in the ITEM block in the figure are to paragraphs in this manual that contain additional information about the item.

70. Use of Second and Third Echelon Preventive Maintenance Form (fig. 53)

a. DA Form 11–239 is a preventive maintenance check list to be used by second and third echelon repairmen as directed.

b. Items that do not apply to the receiver are lined out on figure 53. References in the ITEM block in the figure are to paragraphs in this manual that contain additional information about the item.

71. Performing Preventive Maintenance

Caution: Tighten screws, bolts, and nuts carefully. Fittings tightened beyond the pressure for which they are designed will be damaged or broken.

a. Daily Item.

(1) Refer to the table of components (par. 7), the list of running spares (par. 21) and the list of additional equipment required (par. 22) when checking for completeness of the equipment. For monthly maintenance, check the spares contained inside the power supplies.

(2) Refer to paragraph 24 for selecting the location of the and to paragraphs 29 through 40 for the installation procedures.

(3) Check the legibility of the crystal frequencies and their corresponding dial markings written on the CRYSTALS chart. If they are illegible and have to be remarked, refer to paragraph 32*b*(5) for instructions on how to obtain the proper numbers.

(4) Check the fuse ratings of the dynamotor power supply used to see if they correspond to the voltage of the vehicular battery. Refer to paragraphs 37*b*(6) and 37*c*(3) and (4) for the fuse ratings of the dynamotor power supplies.

(5) Be sure to unlock controls Ⓒ, Ⓘ, and Ⓝ (pars. 42 and 43) before attempting to turn their knobs. For monthly preventive maintenance, inspect the teeth on the gears of the antenna coil (T110A and T110B) tuning slug assembly (fig. 120). Check the antibacklash gear on the receiver tuning shaft. If the gears are dirty, clean them with a small brush dipped in cleaning compound. Relubricate the gears as instructed in paragraph 73*b*.

(6) If there is any doubt concerning the operation of the radio set, proceed to the equipment performance check list (par. 83).

Warning: Disconnect all power to the radio set and use the safety shorting stick to be sure no high voltage exists in the equipment.

b. Weekly Items.

(1) Check to see that the antenna insulating supports are clean. The threaded portions of the whip mast sections should be cleaned and freed from any green scale which usually collects on copper exposed to the air. Any breaks in the long-wire antenna should be carefully spliced and soldered.

(3) Check to see that Plugs PL–55 and PL–

68 are bright and clean. If not, clean the plugs with metal polishing paste, and remove all traces of polish on the plugs. Check to see that the key does not bind and can be manipulated at normal speed. Check the spring-held jack covers on the PHONES, KEY, and MIKE jacks. Check the dial locks for tightness.

c. Monthly Items.

(1) Tubes operated at high voltage, such as tube type 2E22 with exposed plate connections, should be kept extraordinarily free from dirt and dust to prevent leakage of current. The plate cap may be cleaned with a piece of No. 000 sandpaper by wrapping the paper around the cap and gently rubbing the surface. Excessive pressure is not needed. Wipe the cap and glass envelope with a clean dry cloth.

(2) Check the relays as follows:

(*a*) Examine the contacts of the relays with the aid of a flashlight.

(*b*) Tighten all loose connections and mounting screws, but do not apply enough force to damage the screw or break the parts they hold.

(*c*) Brush the exterior with a soft brush. If it is very dirty, clean it with a brush dipped in cleaning compound. If the connections are dirty or corroded, remove, clean, and replace them carefully.

(*d*) When it is necessary to clean the contact surfaces, burnish them with a clean blade of the contact burnishing tool. Place the blade between the contacts, press the contacts together, and move the blade back and forth. If the contacts require additional cleaning, apply Cleaning Compound with a toothpick and again burnish with a clean blade of a burnishing tool. Remove all traces of the cleaning compound with a clean dry cloth.

Note. In the dnyamotor power supplies, only relay K201 of Dynamotor-Power Supply DY–88/YGRC–9 (fig. 142) should be inspected. The other relays are hermetically sealed and, if defective, must be replaced.

(3) Do not bend the plates of the tuning and trimmer capacitors of the receiver-transmitter because alignment and calibration may be impossible.

(4) The antenna binding post, Insulator IN–127, and Mast Base MP–65 or MP–65–A are subjected to high rf voltages when the radio set is in operation. Clean them thoroughly and tighten them to prevent arc-over or leakage.

(5) Refer to paragraphs 72 through 74 for lubricating instructions.

(6) Refer to paragraphs 200 through 202 for instructions pertaining to the brushes.

(7) Remove Battery BA–48 from its compartment in Bag CW–140/GRC–9.

Section IV. LUBRICATION

Note. Lubrication operations will be performed in accordance with the following instructions. There is no lubrication order for this equipment.

72. Approved Lubricants for Radio Set AN/GRC–9(*)

a. Lubricating Materials. The following chart lists the lubricating materials necessary for servicing Radio Set AN/GRC–9(*):

Symbol	Standard nomenclature
OE 10	Oil, Engine, Heavy Duty.
PL Special	Oil, Lubricating, Preservative, Special.
GL	Grease, Aircraft and Instruments.

b. Preliminary Lubrication Instructions.

(1) Do not use excessive amounts of grease or oil and do not allow electrical contacts to become greasy.

(2) Make certain that lubricants and points to be lubricated are clean and free from sand, grit, or dirt. These abrasives are the chief causes of bearing wear and often necessitate bearing replacements.

(3) Use cleaning compound to clean all parts. Before lubrication, wipe clean all

surfaces to be lubricated; use a lint-free cloth dampened with cleaning compound. Keep cleaning compound off surrounding parts.

Warning: Gasoline will not be used for cleaning purposes.

73. Lubricating Instructions for Receiver-Transmitter RT–77(*)/GRC–9

a. Each month, clean the exposed bearing surfaces of switch detent surfaces, hinges, and fasteners, and sparingly apply oil (PL Special). Remove excess oil to prevent possible malfunctioning. Be sure to keep the switch contacts free of all oil and grease .

b. Each month, clean exposed surfaces of antenna tuning slug drive gears, receiver and transmitter tuning capacitor drive gears, and apply to the gear teeth grease (GL). Avoid an excess of grease.

74. Power Supplies, Lubrication at First and Second Echelons

a. Generator GN–58–(*). On the very early models, where oilite bearings were not used, apply a few drops of oil (OE–10) or oil (PL Special) every 3 months. Apply the oil to the hand crank bearings at the side of the generator case. *Do not loosen any of the sealed screws of the waterproof case.* For lubrication of the generator power supply at higher echelons, refer to paragraph 205.

b. Dynamotor-Power Supply DY–88/GRC–9. For lubrication of the dynamotor power supply, refer to paragraph 209.

c. Dynamotor-Power Supply DY–105/GRC–9X. For lubrication of the dynamotor power supply, refer to paragraph 213.

Section V. WEATHERPROOFING

75. Arctic Maintenance

Special precautions to prevent poor performance or total operational failure of this radio set at extremely low temperatures are as follows:

a. When the receiver-transmitter is not used, replace Panel Cover CW–109/GRC–9.

b. Wrap the microphone in its cover bag when it is not used.

c. Allow a warming time for the equipment to reach its operating temperature.

d. Keep Battery BA–48 stored in its compartment in Bag CW–140/GRC–9 because extreme cold will cause the battery to fail.

76. Tropical and Desert Maintenance

Special precautions to prevent failure of this set in areas subject to extremely high temperatures, low humidity, and excessive sand and dust are as follows:

a. To prevent overheating, operate the radio set as instructed in paragraph 47*a*.

b. Make semimonthly preventive maintenance checks as instructed in form DA–239.

c. Keep the cover cap on the Battery receptacle at all times Cord CD–1119 is not used.

Section VI. TROUBLESHOOTING AT ORGANIZATIONAL MAINTENANCE LEVEL

77. General

a. The troubleshooting and repair work that can be performed at the organizational maintenance level (operators and repairmen) is limited in scope by the tools, test equipment, and replaceable parts issued and by the skill of the repairman. Accordingly, troubleshooting is based on the performance of the equipment and the use of the senses in determining such troubles as burned-out tubes, cracked insulators, etc.

b. The following paragraphs in this section help in determining which of the components, such as the receiver-transmitter or power supplies, is at fault and in localizing the fault in that component to the defective stage or item, such as a tube or relay.

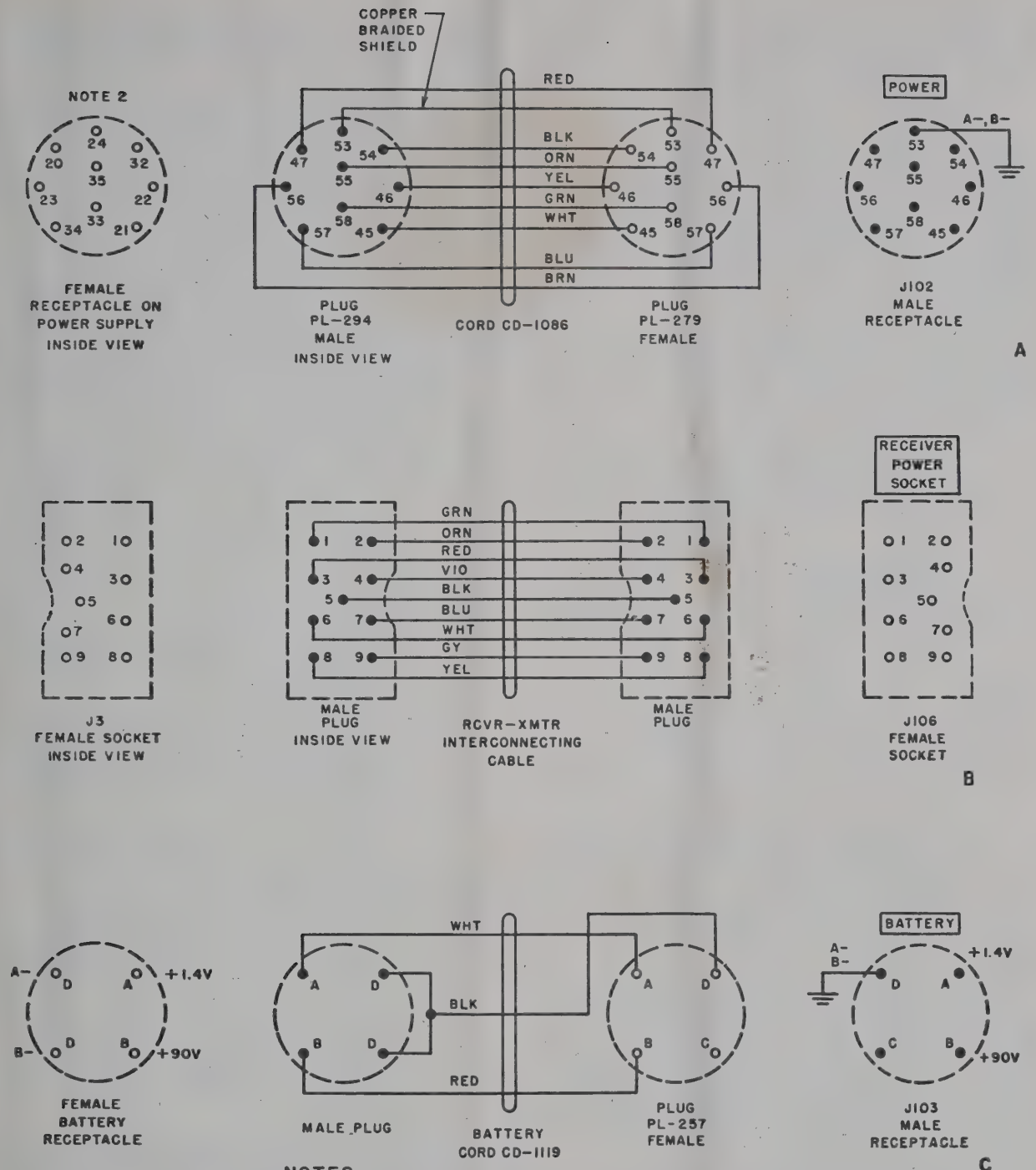

NOTES:

1. ALL PLUGS AND SOCKETS ARE VIEWED FROM OUTSIDE, UNLESS OTHERWISE SHOWN.
2. 240 (GENERATOR GN-58-(*)) OR
   734 (VIBRATOR POWER SUPPLY PE-237) OR
   J202 (DYNAMOTOR-POWER SUPPLY DY-88/GRC-9) OR
   J2 (DYNAMOTOR-POWER SUPPLY DY-105/GRC-9X) OR
   J1 (POWER SUPPLY PP-327/GRC-9Y AND PP-327A/GRC-9Y).

TM263-47

Figure 54. Internal wiring diagrams of cords.

Caution: Do not make adjustments to any circuit involving alignment.

78. Checking Power Cables (fig. 54)

A defective power cord is often the cause of an inoperative receiver or transmitter. The repairman can save a great deal of time by checking the cord first. Use Multimeter TS–352/U for continuity tests of the wires in the cords.

79. Visual Inspection

a. Failure of this equipment to operate properly will usually be caused by one or more of the following faults.

(1) Improperly connected battery cable, Cord CD–1119 or power Cord CD–1086.

(2) Worn, broken, or disconnected cords or plugs.

(3) Antenna lead-in improperly connected to ANT. binding post.

(4) Receiver-transmitter interconnecting cable not connected properly, defective.

(5) Defective tubes, or crystals.

(6) Loose or broken internal wiring.

(7) Dirty or broken switch contacts.

(8) Faulty relay contacts caused by overloading.

(9) Blown fuses or tripped circuit breaker.

Caution: Do not mishandle tubes. Refer to paragraph 81 for tube replacement techniques.

b. Visually inspect the antenna system for obvious abnormalities.

c. Check as many of the above items as practicable before starting a detailed examination of the component parts of the system when the equipment fails. If possible, obtain information from the operator of the equipment regarding performance at the time trouble occurred.

80. System Sectionalization of Trouble to a Component

a. System sectionalization means tracing a fault to the particular component of Radio Set AN/GRC–9(*) responsible for the abnormal operation of the set. By carefully observing the performance of the receiver and transmitter when the equipment is in operation, the fault can often be determined immediately as either a transmitter, receiver, power cord, or power supply fault.

b. The instructions given in (1) and (2) below will aid the repairman in tracing trouble to a component.

(1) The receiver may fail to operate for any of the following reasons:

(*a*) Battery BA–48 may be weak or exhausted. Substitute a new battery or use any one of the other power supplies available and operate the receiver in the receive position.

(*b*) The headset may be defective. Substitute another headset or use the loudspeaker.

(*c*) When using any one of the power supplies except Battery BA–48, Cord CD–1086 may be defective. Substistute the other cord issued with the radio set.

(2) The transmitter may fail to operate for any of the following reasons:

(*a*) One power supply may be inoperative. Substitute any one of the others used with the radio set.

(*b*) The key or microphone switch may be defective. Substitute one for the other to check the starting of the transmitter.

(*c*) The power cable may have one or more broken connections. Try the other Cord CD–1086.

(*d*) On crystal-controlled operation, a crystal may be defective. Substitute another crystal or switch crystals by use of control Ⓕ (fig. 43).

(*e*) When using the combination of Generator GN–58(*) and Battery BA–48, the battery may be weak or exhausted.

81. Electron Tube Replacement Procedure

To prevent the possiblity of discarding serviceable electron tubes, follow the procedures described below:

a. Use Electron Tube Test Set TV–7/U and test first the tubes suspected of causing the trouble, then test the other tubes one at a time. Substitue new tubes only for those which are defective.

b. If a tube tester is not available, troubleshoot by tube substitution as follows:

(1) Replace the suspected tubes, one at a time, with new tubes. Note the tube and the corresponding socket since different sections of the equipment may use the same type tubes. Many tubes used in low-frequency stages such as the receiver beat-frequency oscillator (bfo) tube, V7, may not work when plugged into the receiver converter socket. Therefore, a mixup of these tubes could create a new source of trouble. Conversely, the converter tube, V2, may not work as an hf oscillator but can be used in the bfo stage. A chart of the similar type tubes used in the receiver and transmitter are shown below:

Location	Tube type	Reference No.	Use
Receiver	1L4	V1	Rf amplifier.
	1L4	V3	If amplifier.
	1R5	V2	Converter.
	1R5	V4	If amplifier-crystal oscillator.
	1R5	V7	Beat-frequency oscillator.
Transmitter	3A4	V101	Master oscillator.
	3A4	V102	Frequency doubler.
	3A4	V105	Modulator-oscillator.

(2) Reinsert the remaining original tubes, one at a time, in the original sockets. If equipment failure occurs during this step, discard the last original tube. Do not leave a new tube in a socket if the equipment operates satisfactorily with the original tube. If practicable, retain any removed tube until its condition is checked by a tube checker.

(3) If there is an insufficient number of spare tubes, perform the following procedures:

(*a*) Substitute a new tube for one original tube. If there is no difference or just a slight difference, remove the new tube and replace it with the original one. Similarly, check each original tube, in turn, until the equipment becomes operative.

(*b*) It is possible to remove bfo tube V7 from the circuit and the receiver will still operate. This tube can be used as a substitute tube in either the converter or if stage.

(*c*) In the transmitter, V105 is used as an audio-frequency (af) oscillator in the cw and mcw positions. In these two positions, the af tone is sent to the receiver for monitoring purposes. If the transmitter is not operating but sidetone signals are heard in the headset, then V105 will be a known good tube. It may be used as a substitute for V101 or V102 or either V101 or V102 can be plugged into the modulator tube socket thus, in effect, using the modulator stage and the sidetone monitoring stages as a tube tester.

(*d*) If a replacement for a bad tube soon becomes defective, *troubleshooting must be performed before any more tube substitution is performed.*

(2) Keep a tube that has been in use a long time. Length of service does not necessarily mean it has to be discarded. Satisfactory operation of the tube in the equipment is the proof of its condition.

(5) Do not discard a tube that reads on or near the minimum requirements for that tube. A certain percentage of new tubes barely pass the power limits of the allowable tolerance.

(6) Be careful when removing tubes from their sockets. Do not rock a tube in its socket; this may cause the pins to become broken, bent out of shape, or make intermittent connections.

(7) When replacing the tubes, line up the blank space between the tube prongs with the blank space on the socket before attempting to insert the tube into its socket.

82. Troubleshooting by Using Equipment Performance Checklist

a. General. The equipment performance checklist (par. 83) will help the operator determine

whether Radio Set AN/GRC–9(*) is functioning properly. The checklist gives the item to be checked, the normal indications of correct operation, and the corrective measures that the operator can take. *To use this list, follow the items in numerical sequence.*

b. Action or Condition. For some items, this column gives the conditions and switch settings under which the item is to be checked. For other items, this column states what must be done to the item to check for normal indications given in the next column.

c. Normal Indications. The normal indications listed include the visible and audible signs the operator sees or hears when he checks the item. If the indications are not normal, apply the recommended corrective measures.

d. Corrective Measures. The corrective measures listed are those the operator can make without turning in the equipment for repairs. A reference in the table to a paragraph indicates that the trouble cannot be corrected during operation and that troubleshooting is necessary.

83. Equipment Performance Checklist

	Item No.	Item	Action or condition	Normal indications	Corrective measures
PREPARATORY	1	Antennas AT–101/GRC–9 and AT–102/GRC–9.	Lead-in wire connected to ANT. binding post on transmitter.		
	2	Counterpoises CP–12 and CP–13.	Counterpoise lead connected to GND. binding post on receiver.		
	3	Cord CD–1086	Connect female connection to POWER receptacle and make connection to power source.		
	4	Cord CD–1119	When using radio set with Battery BA–48, connect cord to BATTERY receptacle on transmitter panel.		
	5	Headset HS–30–(*)	Headset plug set completely into either of the PHONES jacks on receiver panel.		
	6	Key J–45 and Microphone T–17 or T–45.	Key plugged into KEY jack and microphone plugged into MIKE jack.		
	7	PHONE-MCW-CW Ⓓ	Set to any of the three types of transmission available.		
	8	OFF-SEND-STANDBY control Ⓔ.	Set to OFF position.		
	9	BAND control Ⓕ	Set to the frequency band desired and place on either MO or XTAL for that band.		
	10	PHONE-C.W.-NET-CAL. control Ⓛ.	Set to PHONE or C.W., whichever type of reception is desired.		
	11	BAND switch control Ⓜ	Set to the frequency band of reception desired.		
	12	A.F. GAIN control Ⓞ	Set to approximate midpoint of its range.		
	13	R.F. GAIN control Ⓟ	Set to approximate midpoint of its range.		
	14	INDICATOR control Ⓑ	Set two red dots in line with each other.		

	Item No.	Item	Action or condition	Normal indications	Corrective measures
PREPARATORY	15	TRANS & RECEIVE-OFF switch, ON-OFF button, or POWER ON-OFF switch.	Press OFF button (Vibrator Power Supply PE–237) or turn to OFF position (Dynamotor-Power Supply DY–88/GRC–9 or DY–105/GRC–9X), or Power Supply PP–327(*)/GRC–9X.		
	16	Voltage selector switch control (Vibrator Power Supply PE–237, Dynamotor-Power Supply DY–88/GRC–9, and Power Supply PP–337(*)/GRC–9X).	Set to proper input voltage to correspond with vehicle battery voltage for the vibrator and dynamotor power supplies. For the ac power supply, set switch to correspond to the ac source.		
	17	Battery lead-in cables (Vibrator Power Supply PE–237), battery lead-in Cable Assembly CX–2031/U (Dynamotor-Power Supply DY–88/GRC–9 or DY–105/GRC–9X), or ac Cable Assembly CX–112/U (Power Supply PP–327(*)/GRC–9Y).	Connect the battery cable to the vehicle battery; 6, 12, or 24 volts, negative grounded. Pay attention to the polarity of the leads. Connect Cable Assembly CX–112/U to the ac source.		
	18	Power output receptacle	Plug the male connector of Cord CD–1086 into the power output receptacle.		
	19	OFF-SEND-STANDBY control Ⓔ.	Turn to STANDBY when using Battery BA–48.		
START	20	Power supply on-off switch	Turn to on	Loud hum is heard from inside vibrator housing (vibrator power supply) or dynamotor rotates (dynamotor power supplies). For the ac power supply, refer to TM 11–5070.	Check voltage selector switch position. Check Cord CD–1086. Check to see that correct fuse is used (Dynamotor-Power Supply DY–88/GRC–9).
				Panel lights illuminated when DIAL LIGHT push buttons are pressed.	See that the headset plug is inserted fully in the PHONES jack. Troubleshooting necessary (par. 171).
	21	A.F. GAIN control Ⓞ	Turn clockwise	Background noises or signals heard in headset.	Phone plug must be completely inserted in PHONES jack.

START					Receiver-transmitter interconnecting cable must be fully inserted. Check position of IMPEDANCE matching switch, S4, in back of receiver chassis. Handkey or microphone push-button switch may be shorted, keeping the transmitter in operation, thus not allowing the receiver to operate. Check or replace the voltage regulator tube V104 (VR105) in the transmitter.
EQUIPMENT PERFORMANCE	22	FREQ. CONTROL Ⓘ----------	Set to frequency of transmission desired.	Dial behind window does not turn	Release dial lock.
	23	ANT. SELECTOR control Ⓐ and ANTENNA TUNING control Ⓒ.	Set to proper positions as explained in paragraph and close the handkey.	INDICATOR Ⓑ glows----------	Tighten knob set screw. Set two red dots on INDICATOR in line. When using long-wire antenna, check to see that the correct jumpers are closed. Make sure that the neon indicator lamp is not broken.
	24	Key J–45----------	PHONE-MCW-CW switch Ⓓ at CW position.	When key is pressed, relay clicks are heard from the transmitter. INDICATOR Ⓑ glows---------- Sidetone should be heard in Headset HS–30–(*).	Check to see that the key plug is fully inserted in KEY jack. Check power cable connections. Set two red dots on INDICATOR Ⓑ line. Adjust SIDE TONE VOL. control Ⓖ. See that receiver-transmitter interconnecting cable is in good condition and is connected. Check to see that the headset plug is fully inserted in the PHONES jack.
	25	Microphone T–17 or T–45 (voice operation).	PHONE-MCW-CW switch Ⓓ set at PHONE. Press the microphone push button.	When microphone push button is pressed, relay clicks are heard in the transmitter. INDICATOR Ⓑ glows----------	Check microphone plug and switch. Check power cables. Check two red dots on INDICATOR Ⓓ.

Item No.	Item	Action or condition	Normal indications	Corrective measures
			Voice sidetone is heard in Headset HS–30–(*).	Inspect interconnecting cable for receiver-transmitter. Check modulator tube V105 (3A4).
			When push button is released, the transmitter panel light will not operate. This is normal for PHONE position of control Ⓓ.	If dial light goes on when control Ⓙ is pressed and microphone push button is released, refer to paragraph 180.
26	PHONE-C.W.-NET-CAL. switch Ⓛ.	Turn to PHONE	Voice signals should be heard in Headset HS–30–(*). Mcw signals also can be heard.	Check to see that antenna lead-in is connected. Headset plug should be fully inserted in PHONES jack. When using Generator GN–58–(*) alone, control Ⓔ must be at SEND position. Refer to paragraph 172.
		Turn to C.W.	It should be possible to hear cw code signals.	Same as for PHONE.
				If phone signals were heard in the PHONE position of control L and no cw signals in the C.W. position, check the bfo tube V7 (1R5).
		Turn to NET	Voice, mcw, or cw signals should be heard at reduced volume. No sidetone should be audible.	Troubleshooting is necessary. Refer to paragraph 172.
		Turn to CAL. and turn TUNING control Ⓝ to a frequency which is a multiple of 200 kc. Turn control Ⓓ on transmitter to PHONE.	Unless the receiver is accurately calibrated a beat note should be heard. If the receiver is accurately calibrated, a beat note should be heard on either side of the dial setting, but exactly at the dial setting the beat note disappears and no note is heard in the headset.	Check that the 200-kc crystal in the receiver is fully inserted and not broken. If cw signals were heard in the C.W. position of control Ⓛ and no beat note on CAL., check second if amplifier tube V4 (1R5), or replace the 200-kc crystal. Refer to paragraph 180 for troubleshooting.
27	A.F. GAIN control Ⓞ	With a signal tuned in, rotate control Ⓞ clockwise and counterwise. Switch control Ⓛ on PHONE or C.W. position.	Intensity of sound in the phones or loudspeaker should increase for the clockwise direction and decrease for the counterclockwise direction.	Refer to paragraph 172 for troubleshooting.

28	R.F. GAIN control Ⓟ	With a signal in the headset, rotate control Ⓟ clockwise and counterclockwise. Switch control Ⓛ on PHONE or C.W. position.	Same as item 27	Refer to paragraph 172 for troubleshooting.
29	TUNING control Ⓝ	Set to desired frequency of reception.	Dial behind window should turn Different stations should be received as the dial is turned. Only one station should be heard at a particular point on the dial.	Tighten set screw on knob. Check converter tube V2 (1R5). Refer to paragraph 172. See that the correct antenna jumpers are closed. Check converter tube V2 (1R5), if only a few stations are heard, at greatly reduced volume.
30	Generator GN–58–(*) used without Battery BA–48.	OFF-SEND-STANDBY switch Ⓔ placed on SEND-PHONE-C.W.-NET-CAL. switch Ⓛ placed on PHONE or C.W. Turn generator hand cranks at approximately 60 rpm.	With the key up, noise or signals should be heard in the receiver headset (when generator power supply operated). Transmitter and receiver panel lights should light when controls Ⓙ and Ⓚ are pressed with key down.	Assuming that the receiver-transmitter is in perfect condition— Turn generator in the direction indicated by the arrow on the side of the generator housing at a speed of approximately 60 rpm. Check to see that Cord CD–1086 is properly connected. Check the brushes riding on the commutators and see that the springs have the correct tension. Replace the vibrator regulator unit in the generator.
31	Generator GN–58–(*) used with Battery BA–48.	OFF-SEND-STANDBY switch to STANDBY. Turn hand generator. Press key down.	Assuming that the antenna circuits are properly tuned, INDICATOR Ⓑ should light. Sidetone should be heard in receiver headset.	Battery BA–48 supplies the plate power to the low power transmitter tubes. If the transmitter does not operate, change the battery. Check Cord CD-1119. If the receiver does not operate when the key is released, change the battery. The generator does not supply power to the receiver in STANDBY position of control Ⓔ.

	Item No.	Item	Action or condition	Normal indications	Corrective measures
STOP	32	OFF-SEND-STANDBY control Ⓔ.	Turn to OFF	Vibrator stops (vibrator power supply). Vibrator and dynamotor stop (dynamotor power supplies). Indicator lamp on ac power supply goes out.	Press OFF button (vibrator power supply) or turn TRANS & RECEIVE-OFF switch to OFF (dynamotor power supplies). If troubleshooting is necessary, refer to paragraph 180.
	33	OFF switch on power supply	Turn to OFF	Receiver or transmitter will not operate regardless of position of any of the receiver-transmitter controls.	Refer to paragraph 180.
	34	Generator GN–58–(*)	If the power supply is being used, turn OFF-SEND-STANDBY control to OFF. Stop turning the hand cranks.	Panel lights will no longer light and the receiver-transmitter will be inoperative.	

CHAPTER 5
THEORY

Section I. THEORY OF RECEIVER

84. Block Diagram
(fig. 55)

a. General. The receiver section of Receiver-Transmitter RT–77(*)/GRC–9 consists of a seven-tube superheterodyne receiver that provides reception of cw, mcw, and am signals over a frequency range of 2.0 to 12.0 mc. The block diagram shows the signal path through the receiver. A complete schematic diagram is shown in figure 175. The same antenna is used for transmitting and receiving; switching between the two sections is accomplished by a relay in the transmitter. Monitoring of the transmitter in all three operating positions (cw, mcw, and am) is made available in the receiver. The gain of the receiver is strong enough to drive a loudspeaker as well as a headset.

b. Antenna Circuit. The signal is picked up by the antenna and fed through the contacts of keying relay K101 to rf amplifier V1. The antenna is connected to the receiver when the relay is in the deenergized position. Provisions are made in the unit so that either a vertical mast (whip), long-wire, or doublet antenna may be used. The antenna receiving components are located in the transmitter section and the signal is fed to the receiver by the receiver-transmitter interconnecting cable.

c. Rf Amplifier. The signal is fed to tuned rf amplifier tube V1 through the receiver-transmitter cable to socket J3 (fig. 57). Tube V1 increases the signal voltage, serves to isolate the oscillator section of the tube V2 from radiating its signal through the receiving antenna, and stops unwanted signals from entering the converter stage. The gain of V1 is controlled manually by gain control Ⓟ and automatically controlled by automatic volume control (avc) (am position only).

d. Converter. The signal from V1 is fed to mixer high-frenquency (hf) oscillator tube V2. The hf oscillator section of V2 produces the hf voltage which is 456 kc higher than the signal frequency. This voltage is combined with the received signal in the mixer section of V2 to produce a difference beat frequency of 456 kc which is selected and amplified by the if intermediate-frequency tubes. No avc voltage is fed to the converter stage.

e. If Amplifier. The 456-kc signal is fed to a two-stage if amplifier consisting of tubes V3 and V4. The if amplifier is a high-gain circuit which is permanently tuned to 456 kc and is thus a constant, single-frequency amplifier. Most of the signal amplification of the receiver occurs in the if amplifier stage. Avc and manual gain control are used only on tube V3, as V4 is also used as a crystal oscillator.

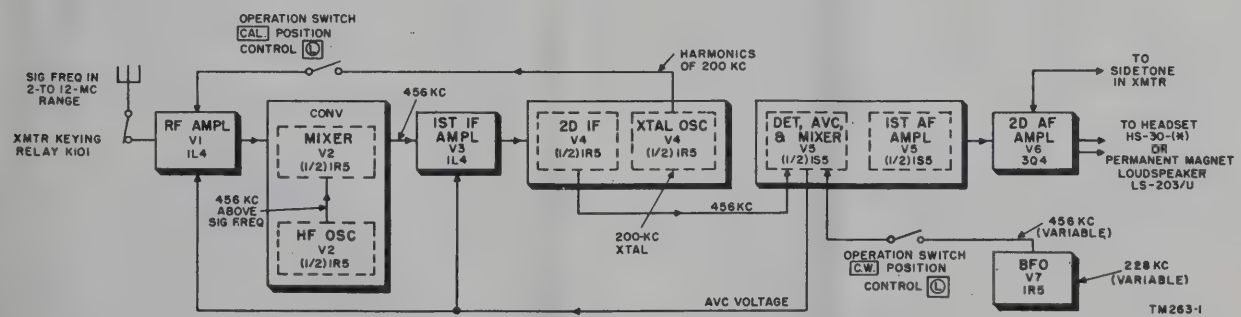

Figure 55. Block diagram of receiver section.

f. Crystal Oscillator. Tube V4 is used as a crystal oscillator in addition to serving as a second if amplifier. A 200-kc crystal and a tank circuit operates in conjunction with V4 to generate harmonics of 200 kc. The harmonics are then fed through the CAL. position of the operation switch, control Ⓛ, to the control grid of rf amplifier V1. These harmonics are then used to check the dial calibration of the receiver.

g. Detector, Avc, and Audio-Frequency Voltage Amplifier. The amplified signal from the second if amplifier is fed to detector tube V5 for demodulation. Tube V5 is a dual tube, which serves as a detector, source of avc, mixer for detection of cw signals, and first af audio-frequency amplifier. The signal is detected and fed to the first af amplifier which steps up the af voltage to drive the second af amplifier. The avc voltage is developed in the detector half of the tube and used to control the bias voltages of the control grids of V1 and V3. The bfo (beat-frequency oscillator) signal (second harmonic of V7) is also fed to the detector section through the C.W. position of the operation switch, control Ⓛ. The bfo signal is then mixed with the if signal to produce a beat frequency in the af range to make cw reception possible.

h. Second Af Amplifier. The signal from the first af tube is made strong enough by the second af amplifier to drive either a headset or a loudspeaker. A sidetone signal from the transmitter is also fed to this stage which is used for monitoring purposes (*j* below).

i. Beat-frequency Oscillator. Beat-frequency oscillator tube V7 permits the reception of cw signals. The bfo generates a signal of 228 kc. The second harmonic, 456 kc, of this signal is used to beat against the incoming if signal in the detector tube. The tuned circuits of the receiver must be slightly detuned from the center of the rf signal before the cw signal can be heard. The bfo harmonic then beats against the if signal to produce a beat note in the af range. The af signal developed in the detector is then fed to the af amplifier stages as in am reception.

j. Sidetone Monitor. During am or mcw transmission, a portion of the modulator signal is fed to the receiver output transformer so that the intelligence, either voice or tone, from the transmitter can be heard in the receiver headset and thus monitored. In the cw position, a tone is also provided for the receiver for monitoring but does not modulate the rf signal of the transmitter.

85. Antenna Circuit (fig. 56)

The path of the signal is through the antenna binding posts, keying relay K101, ANT. SELECTOR switch section S102F (control Ⓐ), antenna matching transformer T114, and to RECEIVER POWER SOCKET J106. The whip, long-wire, or doublet antenna may be selected by means of

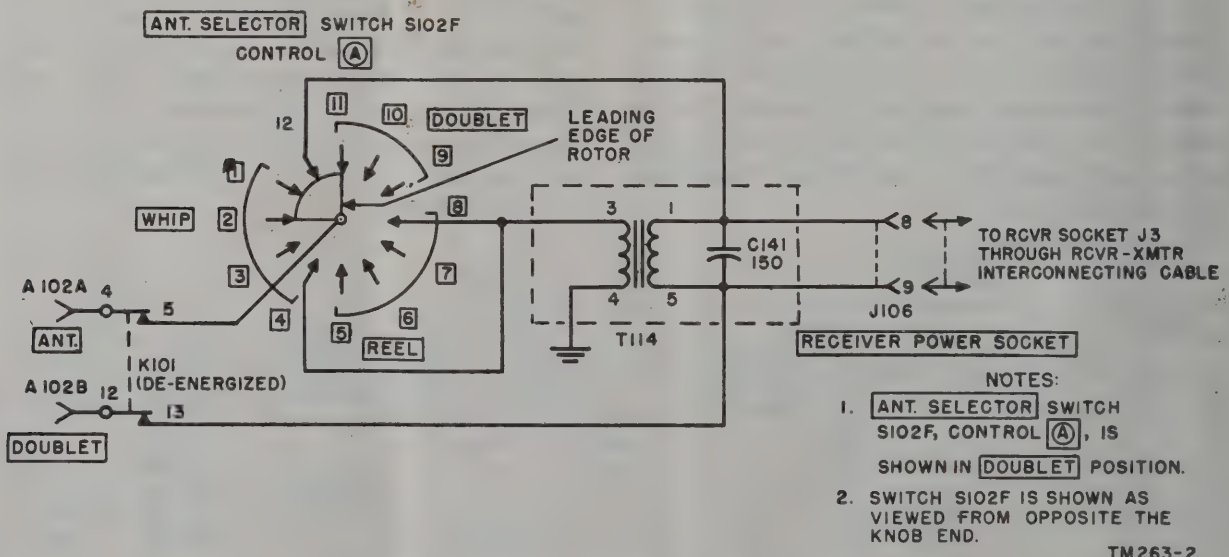

Figure 56. Antenna switching circuit of receiver.

the antenna binding posts on the transmitter. When a single-wire type is provided (whip or long-wire), binding post A 102A is used, and when the doublet is provided, binding post A 102A and A 102B are used. The relay must be de-energized to feed the signal to the receiver section of ANT. SELECTOR switch section S102F. The switch provides the proper circuit changes to receiver transformer T114 for the matching of either antenna used (the impedance of the long wire antenna is about 5,400 ohms and the impedance of the doublet antenna is between 50 and 72 ohms). The signal is then fed to RECEIVER POWER SOCKET J106 and to the receiver section by means of the receiver-transmitter cable connected to socket J3.

86. Antenna Switching (fig. 56)

a. ANT. SELECTOR Switch. ANT SELECTOR switch section S102F, control Ⓐ, uses only three of the eleven switch positions to match the receiver input circuit to either of the three antennas used. The rotating cam on the switch covers four positions at a time with the leading edge selecting the individual numbered positions. During send or standby operation, position 1, 2, 3, or 4 can be switched in when a whip antenna is used, position 5, 6, 7, or 8 can be switched in when a long-wire antenna is used, and position 9, 10, or 11 can be switched in when a doublet antenna is used.

b. Doublet Antenna Signal Path. The signal path starts from the antenna, to binding post A 102A and A 102B, and to contacts 4 and 12 on relay K101, respectively. With ANT. SELECTOR switch section S102F set in DOUBLET positions 9, 10, or 11, the signal path from normally closed contacts 4 and 5 of K101 goes through the rotor and contact 12 of S102F to secondary terminal 1 of transformer T114; the path from normally closed contacts 12 and 13 on the relay is direct to secondary terminal 5 of T114. The signal path from secondary terminals 1 and 5 of T114 is described in *e* below.

c. Long-Wire Antenna Signal Path. When a long-wire antenna is used, it is connected to ANT. binding post A 102A. With ANT. SELECTOR switch section S102F in REEL (long-wire) position 5, 6, 7, or 8, the signal from the antenna is fed to the secondary of T114 through normally closed contacts 4 and 5 of relay K101, and the rotor and contact 8 of S102F, and is coupled by induction from the primary of T114. From terminals 1 and 5 of T114, the signal path is identical for any antenna used (*e* below).

d. Whip Antenna Signal Path. When a whip antenna is used, it is also connected to ANT. binding post A 102A. With ANT. SELECTOR switch section S102F in WHIP position 1, 2, 3, or 4, the signal from the antenna is fed to the secondary of T114 through normally closed contacts 4 and 5 of K101 and the rotor and contact 4 of S102F; and is coupled by induction from the primary of T114. From terminals 1 and 5 of T114, the signal path is identical for any antenna used (*e* below).

e. Common Signal Path. The signal from the secondary of transformer T114 is fed to pins 8 and 9 of RECEIVER SOCKET J106 located on the transmitter and brought to pins 8 and 9 of female socket J3 on the receiver by means of the receiver-transmitter interconnecting cable.

87. Rf Amplifier V1 (fig. 57)

a. The first stage of the receiver is a tuned rf amplifier which uses type 1L4. Rf transformer T1 receives the signal from terminals 8 and 9 on female socket J3 and couples it through capacitor C8 to the control grid, pin 6. Grid resistor R1 permits the application of the avc voltage, but does not allow the signal to be shorted to ground through avc filter capacitor C33. Plate-dropping resistor R2 is bypassed by capacitor C10 so that rf will not flow into the dc supply. The screen grid voltage of V1 is used to control the rf gain. This screen voltage is obtained across variable resistor R9, R.F. GAIN, control Ⓟ, and is fed through screen-dropping resistor R11 to the screen grid. Capacitor C9 bypasses the screen-dropping resistors to prevent degeneration and C24 (fig. 66) bypasses to ground any rf existing on the filament.

b. Considering only band 1, capacitor C3 is inside transformer T1 and is part of the total tuning capacity. Capacitor C3 is a temperature compensating capacitor. Capacitor C6 is the antenna trimmer and is used to adjust the hf end of band 1. These two capacitors in conjunction with TUNING capacitor C7A are in parallel, and

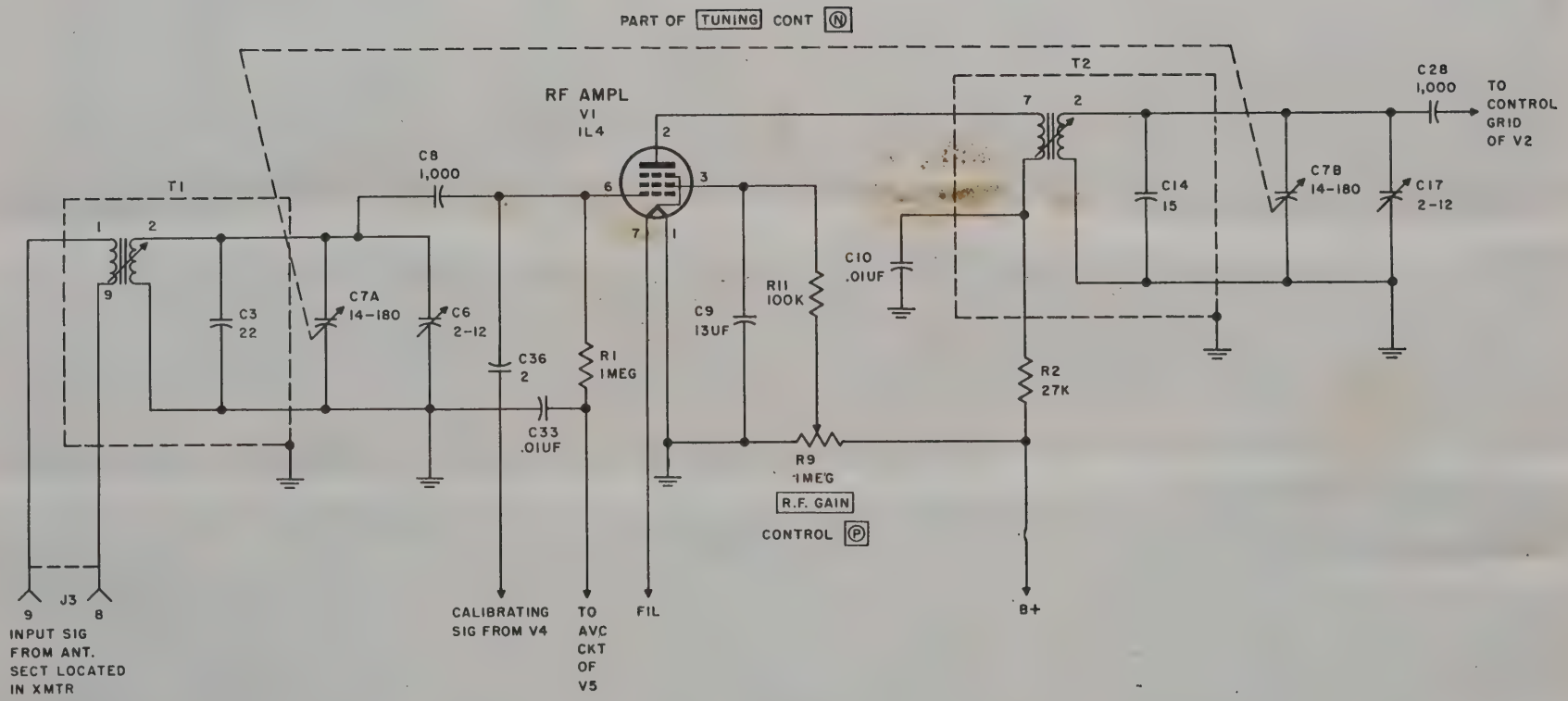

NOTES:

1. TUNING CAPACITORS C7A AND C7B ARE GANGED TO C7C IN CONV STAGE.
2. BAND I POSITION SHOWN.

TM263-281

Figure 57. Rf amplifier, simplified schematic diagram.

they tune the input circuit to resonance with the incoming signal. The lower end of band 1 is adjusted by varying the position of the transformer iron core slug. The selected rf signal in the resonant secondary circuit is coupled to the control grid of rf amplifier V1 by coupling capacitor C8. Capacitor C8 also isolates the control grid dc bias voltage (avc) of tube V1 from the tuning circuit.

c. The amplified output of V1 is applied across second rf transformer T2, the secondary of which is brought to resonance by section C7B of the ganged TUNING capacitor. Considering band 1 only, capacitor C7B works in conjunction with trimmer C17 and fixed capacitor C14. The signal leaves T2 and is coupled by capacitor C28 to the control grid of converter tube V2. On band 2, capacitor C11 (fig. 59) improves the coupling at the higher freqencies.

88. Converter Stage V2 (fig. 58)

a. The converter stage uses tube type 1R5 as a combined mixer and hf oscillator of the series-fed Hartley type. Resistor R5 and capacitor C22 provide the grid-leak bias (band 1) for the oscillator grid, pin 4, of tube V2. Resistor R7 and capacitor C29 are placed in the grid circuit to provide additional bias for band 1 mainly. Grid 2, pin 3, of V2, acts as the oscillator plate and receives its plate voltage through resistor R8 which is bypassed to ground for rf through capacitor C30. Choke coil L16 prevents rf currents from entering the filament circuit and causing disturbances in the other tubes. The signal from the plate circuit of the rf amplifier is fed through capacitor C28 and applied across signal grid resistor R6. The mixing of the received signal and the hf signal takes place in the electron flow of the tube.

b. The resonant circuit in the oscillator portion of V2 is formed by one coil of T3, which is selected by band changing switch section S1F (fig. 59). Band 1 is tuned to resonance by variable TUNING capacitor C7C, control Ⓝ, adjustable trimmer C27, and capacitor C23. Capacitor C23 is used as a frequency corrector for temperature changes. When the temperature increases, the coil inductance increases, thus

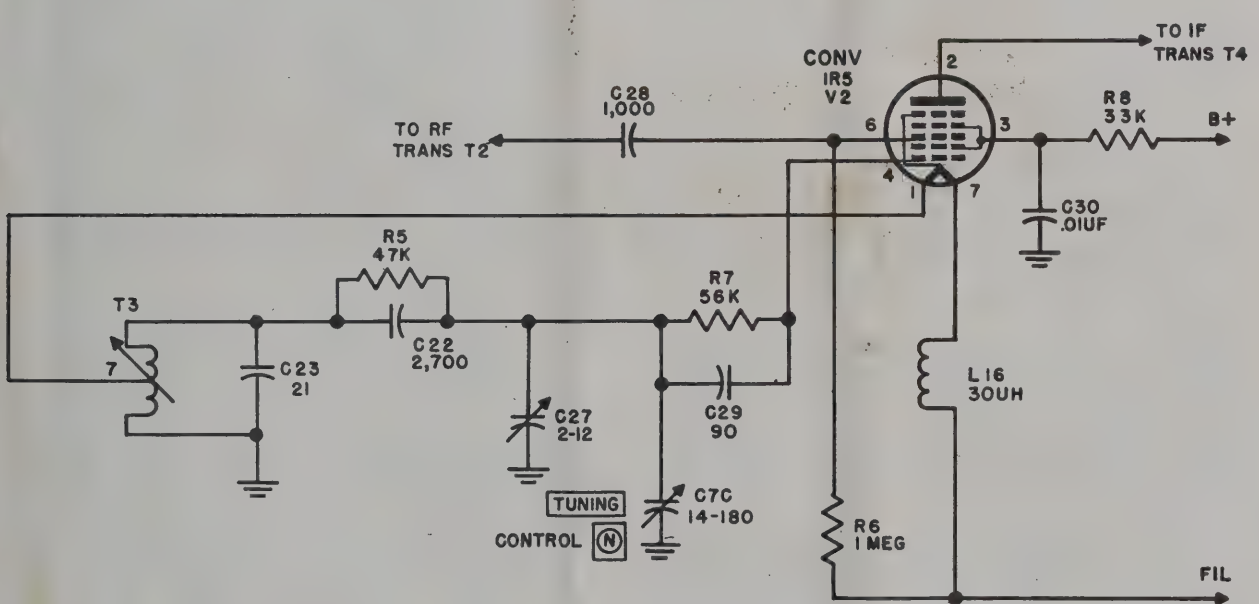

NOTES:
1. CAPACITOR C23 IS 18 UUF IN SOME UNITS.
2. CAPACITOR C29 IS 91 UUF IN SOME UNITS.
3. TUNING CAPACITOR C7C IS GANGED TO C7B AND C7A.
4. ONLY BAND 1 COIL OF T3 IS SHOWN.
5. RESISTOR R7 IS 57K IN SOME UNITS.

TM 263-77

Figure 58. Converter stage, simplified schematic diagram.

lowering the frequency; however, the capacitor is so made as to decrease its capacity when the temperature increases. The decreased capacitance opposes the increased inductance and the temperature effect on tuning is nullified.

c. The hf oscillator is tuned by TUNING capacitor C7C so that it is always 456 kc higher in frequency than the signal frequency. Thus, when the received signal from the rf amplifier is applied to grid 3, pin 6, of tube V2, the two frequencies will beat together, forming sum and difference frequencies. The tuned primary of if transformer T4 (fig. 60) is resonant at the difference frequency of 456 kc and, therefore, allows only this frequency to continue on to first if amplifier V3.

89. Band Changing Circuit (fig. 59)

Receiver band switch S1, control Ⓜ, is a three-position double-section switch which selects the tuned circuits for each band in the rf and converter circuits. Transformers T1, T2, and T3 contain three tuned circuits each to cover the frequency range of the receiver. The sections of the switch are described as follows:

a. Switch section S1A picks up the signal from terminals 8 and 9 of socket J3 and feeds it to either primary winding of rf transformer T1. The rear section of the switch selects one of the primaries of T1 to terminal 8 of J3 and the front section selects the other end of the primary being used to terminal 9.

b. Switch section S1B applies the selected band position to the control grid rf amplifier V1 and ground. The rear section selects the tuned circuit leading to the grid and the front section shorts to ground the two unused secondaries of T1.

c. Switch section S1C couples the amplified output of V1 to second rf transformer T2. The rear section connects the upper ends of the primaries as selected to the plate of V1. The front section is not used. The lower ends of the coils are connected to the plate supply voltage.

d. Switch section S1D couples the signal from the secondary of T2 through capacitor C28 to the control grid of converter tube V2. The rear section couples the hot side of the selected secondary to the grid of V2; the front section of the switch shorts to ground the two tuned secondaries which are not being used.

e. Switch section S1E selects a tap on either of three oscillator coils of T3 and connects it to the filament, pin 1, of V2.

f. Switch section S1F connects the selected band position to the oscillator control grid of V2. The front section connects the top ends of the coils to the grid, pin 4; the rear section shorts out the unused coils to ground.

90. Intermediate Amplifiers V3 and V4 (fig. 60)

a. Two if. amplifier stages are used: the first stage, V3, uses tube type 1L4, and the second stage, V4, uses tube type 1R5. The primaries and secondaries of if. transformers T4, T5, and T6 are shunted by capacitors C31 and C32, C37 and C38, and C44 and C45, respectively. These capacitors, combined with adjustable powdered iron cores inserted in the primary and secondary coils, tune the transformers to 456 kc. The 456-kc signal from the plate of V2 is applied to the primary of T4, appears in the secondary by induction, and is applied to the control grid, pin 6, of V3. Capacitor C35 acts as an rf bypass for the screen grid of V3. Capacitor C35 acts as an rf bypass for the screen grid of V3. Capacitor C46 is the screen grid bypass for V4 in all positions except the CAL. position of operation switch S3 (par. 95). Resistor R14 is the screen-dropping resistor for V4. The avc voltage supplies bias to V3 through the secondary of T4. Capacitor C33 is used as a filter capacitor for the avc as well as completing the rf path from the low side of the secondary of T4 to ground. Capacitor C40 is a bypass capacitor for the B+ supply line. The gain of V3 is controlled manually by potentiometer R9, R.F. GAIN, control Ⓟ, which varies the voltage supplied to the screen grid. During net operation only, the gain control is removed from the circuit and R10, a large fixed resistor (fig. 65) is substituted in its place. Refer to paragraph 95 for the description of this switching circuit.

b. The output of V3 is fed through the primary of transformer T5 which is identical with T4 and the signal is applied to the input grid, pin 6, of tube V4. Tube V4, type 1R5, acts as a second if. amplifier and crystal oscillator.

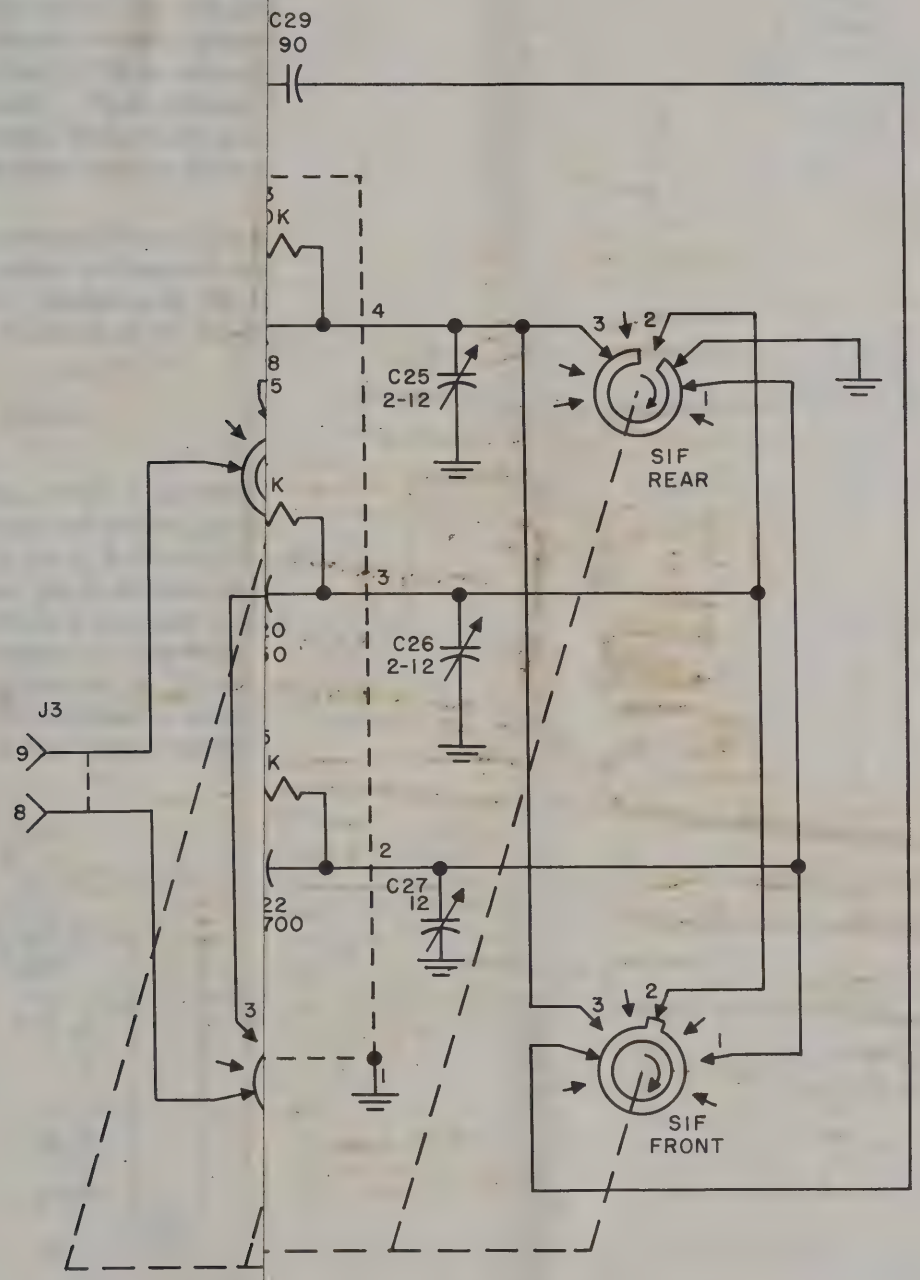

TM263-28

405863 O - 56 (Face p. 88)

lowering the frequency; however, the capacitor is so made as to decrease its capacity when the temperature increases. The decreased capacitance opposes the increased inductance and the temperature effect on tuning is nullified.

c. The hf oscillator is tuned by TUNING capacitor C7C so that it is always 456 kc higher in frequency than the signal frequency. Thus, when the received signal from the rf amplifier is applied to grid 3, pin 6, of tube V2, the two frequencies will beat together, forming sum and difference frequencies. The tuned primary of if transformer T4 (fig. 60) is resonant at the difference frequency of 456 kc and, therefore, allows only this frequency to continue on to first if amplifier V3.

89. Band Changing Circuit (fig. 59)

Receiver band switch S1, control Ⓜ, is a three-position double-section switch which selects the tuned circuits for each band in the rf and converter circuits. Transformers T1, T2, and T3 contain three tuned circuits each to cover the frequency range of the receiver. The sections of the switch are described as follows:

a. Switch section S1A picks up the signal from terminals 8 and 9 of socket J3 and feeds it to either primary winding of rf transformer T1. The rear section of the switch selects one of the primaries of T1 to terminal 8 of J3 and the front section selects the other end of the primary being used to terminal 9.

b. Switch section S1B applies the selected band position to the control grid rf amplifier V1 and ground. The rear section selects the tuned circuit leading to the grid and the front section shorts to ground the two unused secondaries of T1.

c. Switch section S1C couples the amplified output of V1 to second rf transformer T2. The rear section connects the upper ends of the primaries as selected to the plate of V1. The front section is not used. The lower ends of the coils are connected to the plate supply voltage.

d. Switch section S1D couples the signal from the secondary of T2 through capacitor C28 to the control grid of converter tube V2. The rear section couples the hot side of the selected secondary to the grid of V2; the front section of the switch shorts to ground the two tuned secondaries which are not being used.

e. Switch section S1E selects a tap on either of three oscillator coils of T3 and connects it to the filament, pin 1, of V2.

f. Switch section S1F connects the selected band position to the oscillator control grid of V2. The front section connects the top ends of the coils to the grid, pin 4; the rear section shorts out the unused coils to ground.

90. Intermediate Amplifiers V3 and V4 (fig. 60)

a. Two if. amplifier stages are used: the first stage, V3, uses tube type 1L4, and the second stage, V4, uses tube type 1R5. The primaries and secondaries of if. transformers T4, T5, and T6 are shunted by capacitors C31 and C32, C37 and C38, and C44 and C45, respectively. These capacitors, combined with adjustable powdered iron cores inserted in the primary and secondary coils, tune the transformers to 456 kc. The 456-kc signal from the plate of V2 is applied to the primary of T4, appears in the secondary by induction, and is applied to the control grid, pin 6, of V3. Capacitor C35 acts as an rf bypass for the screen grid of V3. Capacitor C35 acts as an rf bypass for the screen grid of V3. Capacitor C46 is the screen grid bypass for V4 in all positions except the CAL. position of operation switch S3 (par. 95). Resistor R14 is the screen-dropping resistor for V4. The avc voltage supplies bias to V3 through the secondary of T4. Capacitor C33 is used as a filter capacitor for the avc as well as completing the rf path from the low side of the secondary of T4 to ground. Capacitor C40 is a bypass capacitor for the B+ supply line. The gain of V3 is controlled manually by potentiometer R9, R.F. GAIN, control Ⓟ, which varies the voltage supplied to the screen grid. During net operation only, the gain control is removed from the circuit and R10, a large fixed resistor (fig. 65) is substituted in its place. Refer to paragraph 95 for the description of this switching circuit.

b. The output of V3 is fed through the primary of transformer T5 which is identical with T4 and the signal is applied to the input grid, pin 6, of tube V4. Tube V4, type 1R5, acts as a second if. amplifier and crystal oscillator.

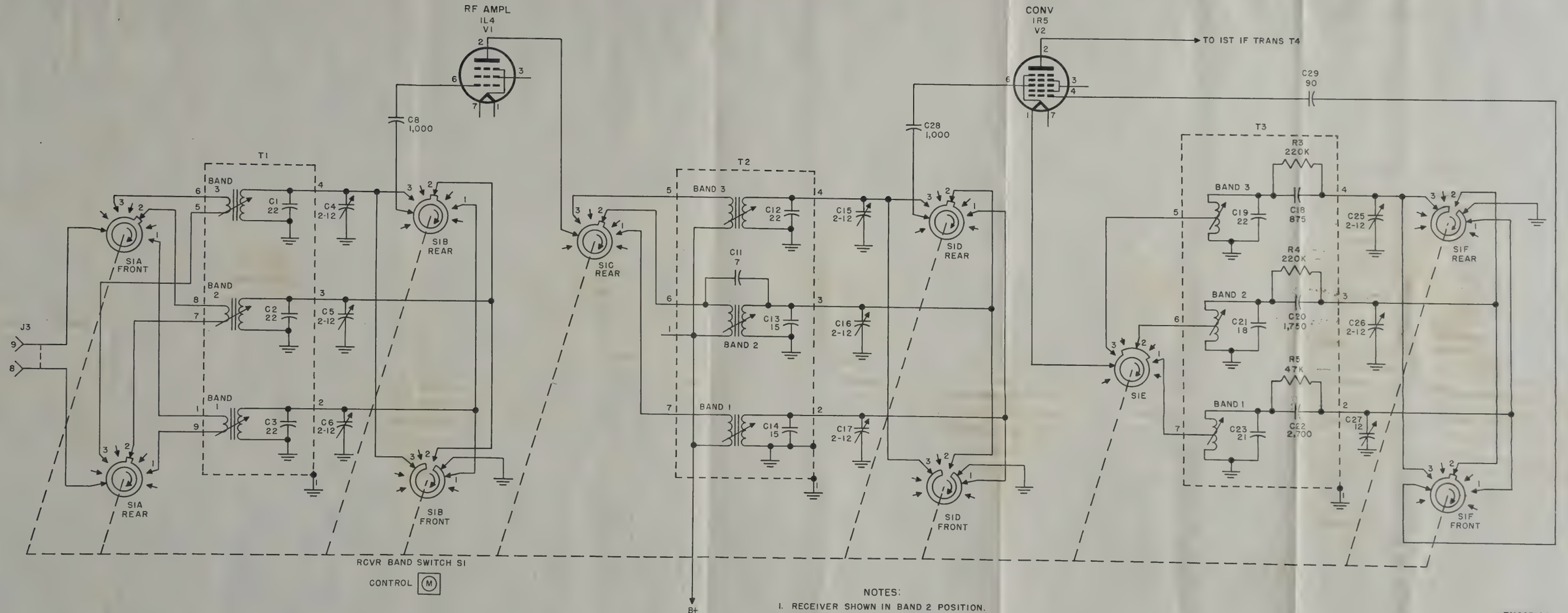

NOTES:

1. RECEIVER SHOWN IN BAND 2 POSITION.
2. CAPACITOR C13 IS 17UUF IN SOME UNITS.
3. CAPACITOR C19 IS 18UUF IN SOME UNITS.
4. CAPACITOR C23 IS 19UUF IN SOME UNITS.

TM263-28

405863 O - 56 (Face p. 88)

Figure 59. Band changing circuit, simplified schematic diagram

When operation switch S3–1 (fig. 65) is in either the PHONE, C.W., or NET position, the oscillator portion is shorted out and the tube acts as a straight if. amplifier. No avc voltage is applied to the control grid of V4. A very small bias exists only between the control grid and the center of the filament element because the low side of the secondary of T5 is connected to filament pin 1 (ground). Plate voltage is fed through rf filter resistor R15, which is bypassed to the filament ground line by filter capacitor C43.

c. The amplified output signal from V4 is fed to if. transformer T6, which is identical with T5 and T4; from third if. transformer T6, the signal is applied to the diode plate of detector tube V5.

91. Crystal Calibrating Circuit (fig. 61)

a. A crystal calibrating circuit is included as part of the second if. stage and utilizes grids 1 and 2 of tube V4. Grid 1, pin 4, is the oscillator grid, and the screen grid, pin 3, is used as the oscillator plate. This circuit is resonant at 200 kc and provides the means of checking accurately the receiver calibration at 200-kc intervals. Calibration of the receiver is obtained by feeding harmonics of the crystal oscillator signal from the oscillator grid, pin 4, through coupling capacitor C36 to the control grid of V1.

b. This signal is amplified by the first rf amplifier and fed to the signal grid, pin 6, of converter tube V2. In this tube, it is mixed with the hf signal to form an if. signal of 456 kc which is passed on through the intermediate amplifier stages. Upon leaving if. transformer T6, the signal is mixed with the output of the bfo. Because the bfo generates a signal of 456 kc, a zero beat results, becasue the if. signal is also 456 kc.

c. The tuning dial is placed at any setting corresponding to a harmonic of the 200-kc crystal. If the rf and hf oscillator tuned circuits are not tuned exactly to the frequency stated on the dial, it will be evident that the converter tube will not produce an if. signal of precisely 456 kc. It will then be necessary to detune the TUNING knob slightly so that a frequency of 456 kc will be produced to zero beat with the 456-kc output signal of the bfo. The amount of detuning necessary to obtain zero beat is the error in the dial calibration. The receiver dial is accurately calibrated if the zero-beat note occurs when the dial number, corresponding to

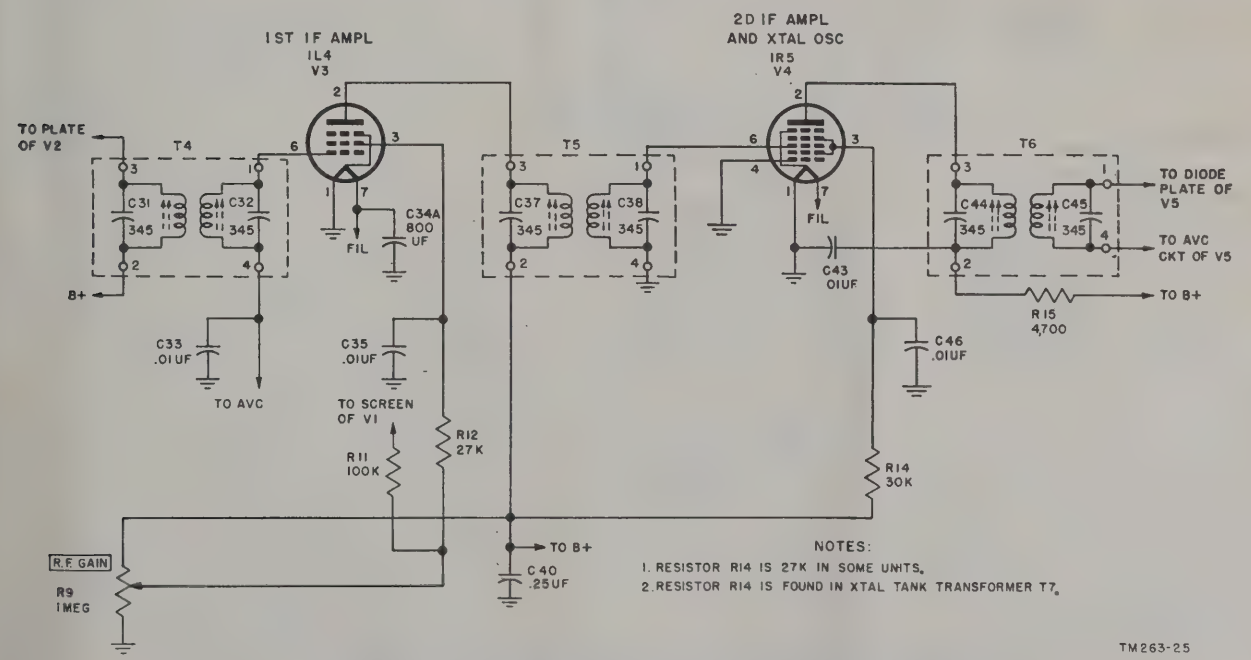

Figure 60. If. amplifiers, simplified schematic diagram.

the crystal harmonic frequency, is exactly under the hairline.

d. The calibration may in this manner be checked at any dial point which corresponds to a frequency equal to any of the harmonics of the crystal oscillator 200-kc crystal. The crystal oscillator therefore acts as a very accurate signal generator.

e. Transformer T7 is tuned to slightly higher than the crystal frequency of 200 kc, by fixed capacitor C42 and an adjustable iron core. It is necessary for the tank circuit to be tuned to slightly above the crystal frequency, otherwise the circuit will not oscillate.

f. Resistor R14, which is located within T7, is the screen grid voltage-dropping resistor. Capacitor C41 prevents rf energy from entering the power supply by placing the lower end of the crystal and the tank circuit at ground potential. Capacitor C39 and grid leak resistor R13 develop the bias voltage for the oscillator grid, pin 4. Capacitor C46, the usual screen grid bypass (fig. 60) is removed from ground by switch S3–1, placed in the CAL. position (par. 95) to permit the oscillator section to function.

92. Detector, Avc, First Audio Amplifier, and Mixer (fig. 62)

a. Detector Section. The detector stage uses the diode section of tube V5, type 1S5. The input from the secondary of T6 is applied to the diode element, pin 3, and through capacitor C49 to ground. When the diode conducts, a rectified voltage appears across diode load resistors R17 and R18. Capacitor C49 and resistor R17 also serve as part of the if. filter network along with C47. The audio voltage appearing across the diode resistors is tapped off above R18 and applied through coupling capacitor C48 to A.F. GAIN variable resistor R19A, control ⓞ. Plate decoupling filter of VA, R15 and C43, prevents the if. signal from entering other circuits.

b. Avc Section. The avc stage also uses the diode section of tube V5. Resistors R17 and R18 also serve as the avc load resistors. When the diode conducts, the rectified voltage developed across R18 is negative with respect to ground for the correct polarity for avc action. Resistor R16 and capacitor C33 form a filter circuit which smooths out the af variations. The avc voltage is fed to the control grid cir-

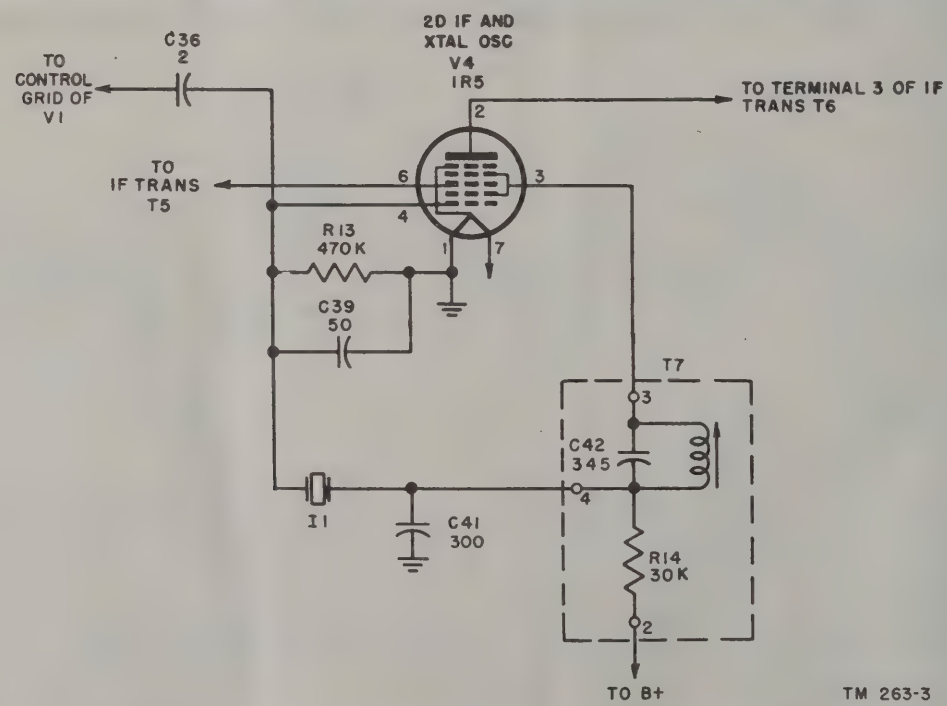

Figure 61. Crystal calibrator ocsillator, simplified schematic diagram.

cuits of rf amplifier V1 and if. amplifier V3 only when operation switch S3 is in the PHONE position (par. 95).

c. First Audio Amplifier. The af stage uses the pentode section of V5. The af signal from the top of R18 is applied through coupling capacitor C48 to A.F. GAIN control R19A, control ⓞ. The signal then goes to the control grid, pin 6. After amplification, the signal is coupled through C53 to the other half of A.F. GAIN control R19B ganged to R19A. Resistor R21 is the af load and the dc plate voltage is fed through it; the dc screen voltage is fed through dropping resistor R20 which is bypassed by capacitor C50. Resistor R21 is also bypassed at the plate end, but the value of C52 is so chosen that only the if. and not the af variations are bypassed to ground. Resistor R28 and capacitor C40 form a decoupling network to prevent af variations from entering the if. and rf stages through the B+ line.

d. Mixer. A 456-kc signal is fed from bfo tube V7 (par. 94) to diode plate, pin 3, of V5, through C51 for heterodyne action with the if. signal coming from V4. Mixing is accomplished in the electron stream of the tube to make possible cw reception (par. 95*c*(2)).

93. Second Audio Amplifier (fig. 63)

a. Variable resistor R19B is the second section of the A.F. GAIN control. Better control of the audio gain is effected by ganging the first

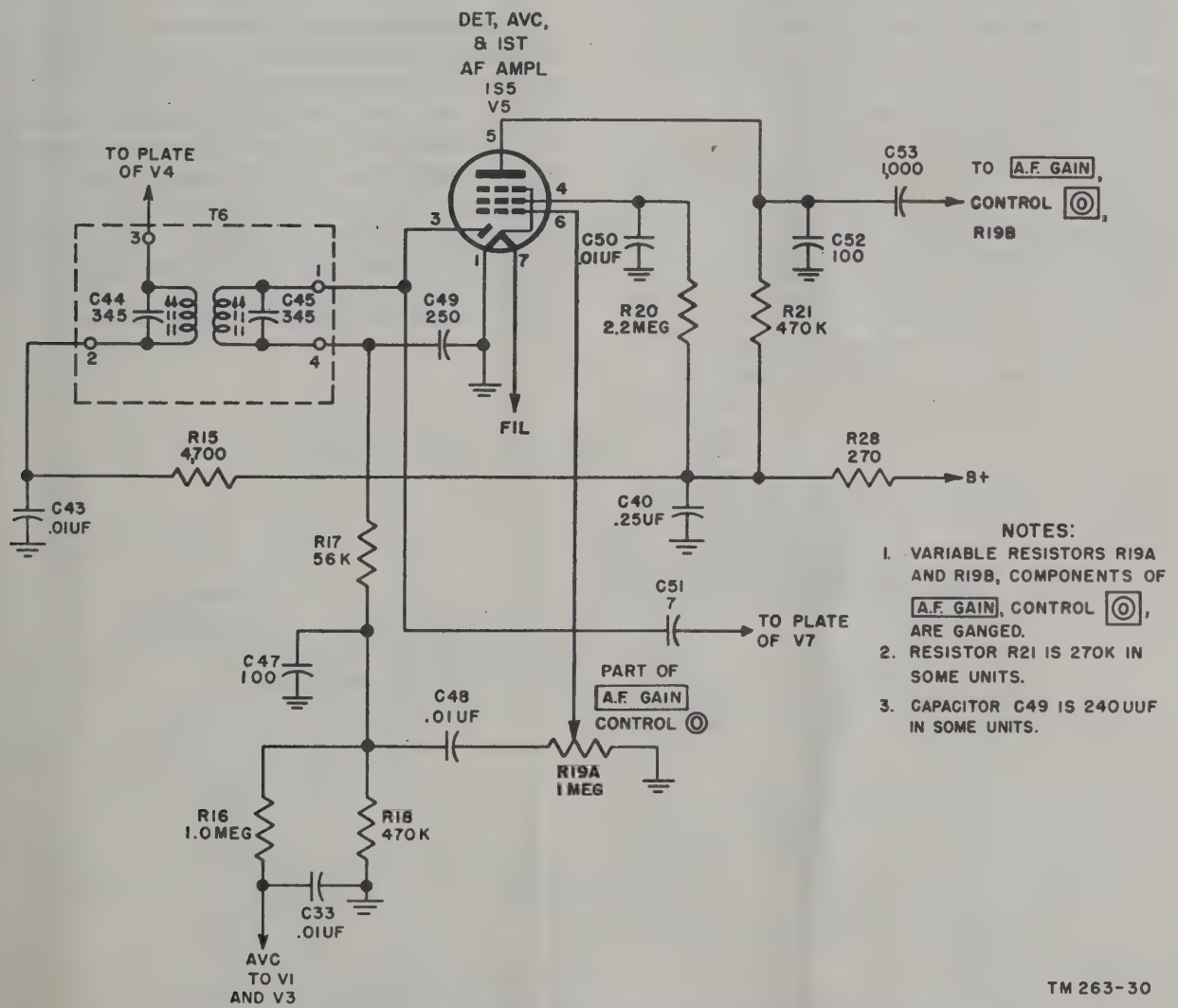

Figure 62. Detector, avc, and first audio amplifier, simplified schematic diagram.

audio control for V5 and the control for V6. The grid of V6 is biased by means of bias cell BT1. Fixed bias is used to minimize distortion. The bias cell is bypassed for audio by capacitor C54. The plate load of af amplifier V6 is af output transformer T9. Transformer T9 provides secondary output impedances of 250 and 4,000 ohms for a headset or loudspeaker. The required output impedance is selected by IMPEDANCE switch S4 which is located on the rear of the receiver chassis. The output circuit is bypassed by capacitor C57 to prevent the impedance from becoming too high when working into an inductive load such as the headset or loudspeaker. Capacitor C61 bypasses any rf energy from the transmitter that may enter the receiver when sidetone signals are being received. The screen receives voltage from resistor R23 which is bypassed by capacitor C55. Resistor R29 and capacitor C34B form a decoupling circuit to prevent af variations from entering the rf or if. stage through the B+ line.

b. A sidetone signal for monitoring purposes is obtained from the transmitter through resistor R24 and blocking-coupling capacitor C56. The sidetone is brought to the headset or loudspeaker through output transformer T9. The sidetone is connected to the primary so that the monitoring signal can be transformed to the proper impedance regardless of which impedance tap is selected by S4. The sidetone volume is adjusted by the sidetone volume control located in the transmitter. The sidetone is removed when S3–2 is placed in the NET position (par. 95).

c. PHONES jacks J1 and J2 are provided so that two headsets or two speakers can be used at the same time. The jacks are connected in parallel across the secondary of output transformer T9. Either jack also serves as a filament switch (fig. 66) to turn on the filament power when either a headset or loudspeaker is plugged into the jack.

94. Beat-Frequency Oscillator (fig. 64)

a. Because the received cw signal is not audible when detected normally, it is necessary to provide a means for producing an audible note. The bfo consists of an electron-coupled oscillator, the oscillator section being a series-fed Hartley circuit. The oscillator output, when beat against the amplified cw if. signal, produces an audible difference frequency. The fundamental of the bfo is 228 kc, but the second harmonic of 456 kc does the actual heterodyning.

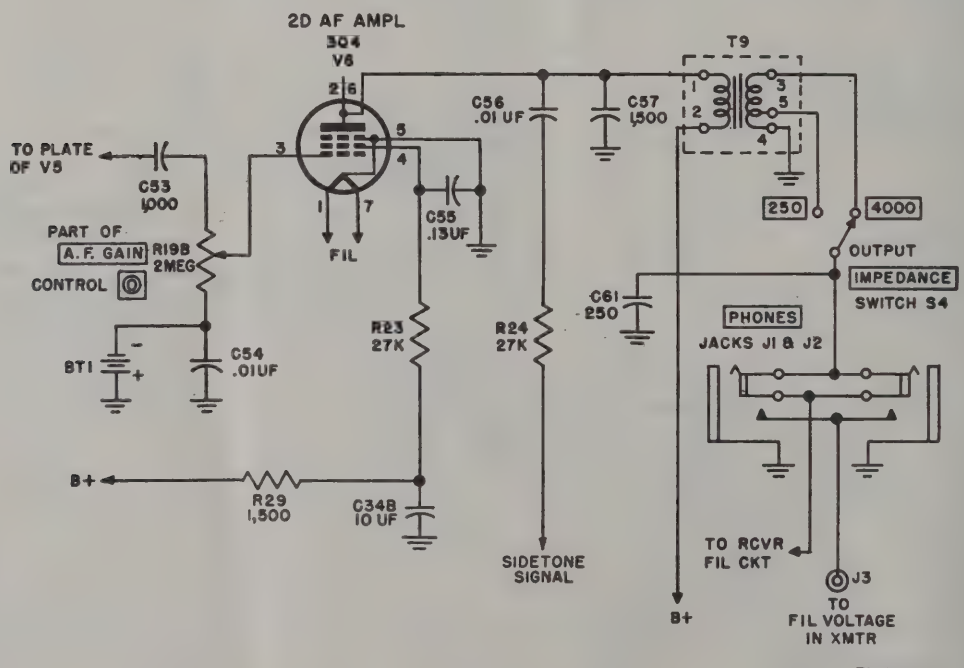

Figure 63. Second audio amplifier, simplified schematic diagram.

b. The oscillator section of V7 uses grid 1, pin 4, as the oscillator grid and uses grid 2, pin 3, as the oscillator plate. The coil of T8 is tapped at the correct point to maintain oscillations, and is directly connected for rf, through ground by capacitor C60, to filament pin 1 of V7. The tank coil is tuned to resonance by a powdered-iron slug and fixed capacitor C59. Capacitor C58 is placed between the tank circuit and the oscillator grid to prevent the direct-current (dc) voltage in the tank circuit from entering the oscillator grid circuit. The bias appears across grid-leak resistor R25; C58 acts as the grid-leak capacitor. The oscillator plate, pin 3, receives its voltage through the parallel combination of resistors R26 and R27. The bfo is aligned by adjustment of the slug in coil T8.

c. The signal produced by the oscillator section of V7 is coupled by the electron stream to the plate circuit. The signal is then amplified and appears across load resistor R22. From resistor R22, the 456-kc signal is applied through capacitor C51 to the diode plate of detector tube V5. At the diode, it mixes with the incoming if. signal and, if the main tuning capacitor is slightly detuned, there will be produced an audible beat note, the frequency of which is dependent on the amount of detuning. Capacitor C51 is also used to block the dc plate voltage of V7 from entering the diode plate of detector tube V5.

d. The bfo is made inoperative in the PHONE position of operation switch S3 by shorting out the screen voltage to the tube (par. 95).

95. Operation Switch S3 (fig. 65)

Operation switch S3 is a two-ganged, four-position, two-section switch providing the proper receiver circuitry changes necessary when placed in either the PHONE, C.W., NET, or CAL. position. The description of the switch is as follows:

a. Switch Section S3–2. This section of the switch is used to control the rf gain of the receiver in all positions of the switch and to ground out the sidetone signal when placed in the NET position.

(1) In the PHONE, C.W., or CAL. position, the screen grid of first if. tube V3 is conected to either segment of the rotor of S3–2 through R12 and then to the arm of R.F. GAIN control Ⓟ. The screen grid of rf tube V1 is connected to the rotor segment of S3–2 through R11 and then to the arm of control Ⓟ also. In these three positions, the gain of the receiver is controlled by varying control Ⓟ which, in turn, varies the gain of V1 and V3. The other half of the switch allows

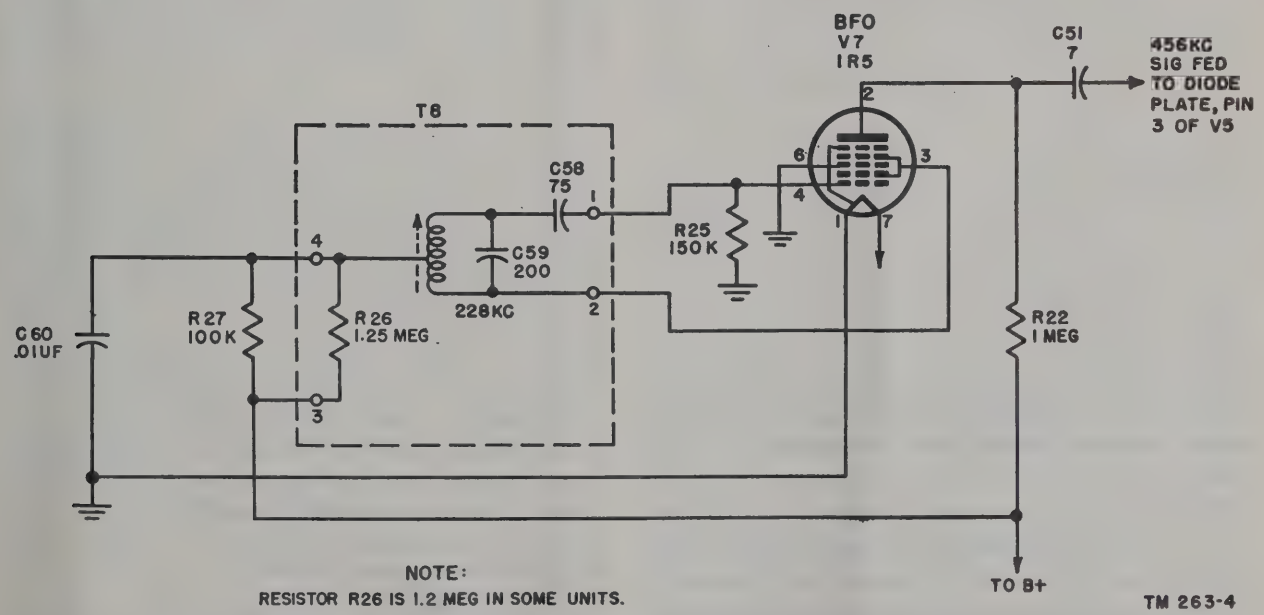

Figure 64. Beat-frequency oscillator, simplified schematic diagram.

sidetone to be heard in the PHONE and C.W. positions only, because S3–3 (*c*(1) below) turns off the sidetone on the CAL. and NET positions.

(2) In the NET position, the screen grid voltage of V3 is greatly reduced by adding R10 in series with R12. The rf gain control is disconnected from the screen grid of V3 but remains in the screen circuit of V1. The other half of S3–2 shorts out the sidetone signal through R24 to ground to prevent sidetone from entering T9 and interferring with the net signal. Figure 67 shows the switch placed in the NET position.

b. Switch Section S3–1.

(1) In the PHONE, C.W., and NET positions, the oscillator grid of V2, pin 4, and crystal I1 are shorted to ground. This places C36 to ground also but does not disturb the rf amplifier stage because of the small size of the capacitor (244*f*). The switch also places screen grid capacitor C46 to ground as a normal screen grid bypass capacitor.

(2) In the CAL. position, the oscillator grid of V2 and the crystal are removed from ground and the bottom end of the crystal is placed at rf ground by C41. The switch also removes C46 from ground to permit the tank circuit of T7 to resonate at the crystal frequency.

c. Switch Section S3–3. This section of the switch turns off the bfo stage and permits avc action for am operation and turns on the bfo while turning off the avc for operation in the C.W., NET, and CAL. positions. It also provides voltage to the screen grid of modulator tube V105 in the PHONE and C.W. positions (par. 113) for sidetone reception and allows low-voltage operation of transmitter exciter tubes V101 and V102 for NET operation. The connections of S3–3 are described as follows:

(1) In the PHONE position, avc is fed through R1 to the control grid of V1 (fig. 57) and through the secondary of T4 to the control grid of if. amplifier tube V3 (fig. 60). To prevent distortion of the af signal during operation in the PHONE position, the bfo is turned off by shorting the screen voltage of V7 through terminal 4 of T8 to ground. The other half of the switch permits V105 to generate the sidetone signal by placing +105 volts through R113 (fig. 87) to the screen of the tube during operation in the PHONE and C.W. positions.

(2) In the C.W., NET, or CAL. position, the bfo is made operative and the avc is turned off because the rotor segment of S3–3 ungrounds the bfo stage and grounds the avc voltage. The other half of switch S3–3 in the NET position, allows +105 volts to be applied to rf exciter tubes V101 and V-102 of the transmitter by jumping contacts 17 and 18 of K101 (fig. 67). The CAL. position of this half of the switch is described in paragraph 113*c* (2) and shown in figure 87.

96. Receiver Filament Circuit (fig. 66)

a. A filament supply of 1.4 volts is required for the panel light and tubes of the receiver. The filaments are all connected in parallel, including the two filaments in V6, tube type 3Q4. When DIAL LIGHT-PUSH switch S2, control Ⓚ is pressed, it disconnects one-half of the filament of V6 and connects in its place panel light E1.

b. Voltage regulator CR1 is a selenium metallic rectifier which serves as a filament voltage regulator, maintaining the filament voltage at 1.4 volts. In the dynamotor power supplies (fig. 103 and 106), a thermal resistor is placed in series with the filament line and works in conjunction with CR1 to regulate the filament voltage. Capacitor C24 is an rf bypass which is so connected that the rf will not enter the filament supply lines. Choke L16 in the filament lead of tube V2 also serves this purpose. Capacitor C34A helps to regulate the filament voltage because of its large size.

97. Receiver Filament Switching Circuit (fig. 66)

a. Cord CD–1086 connects either the vibra-

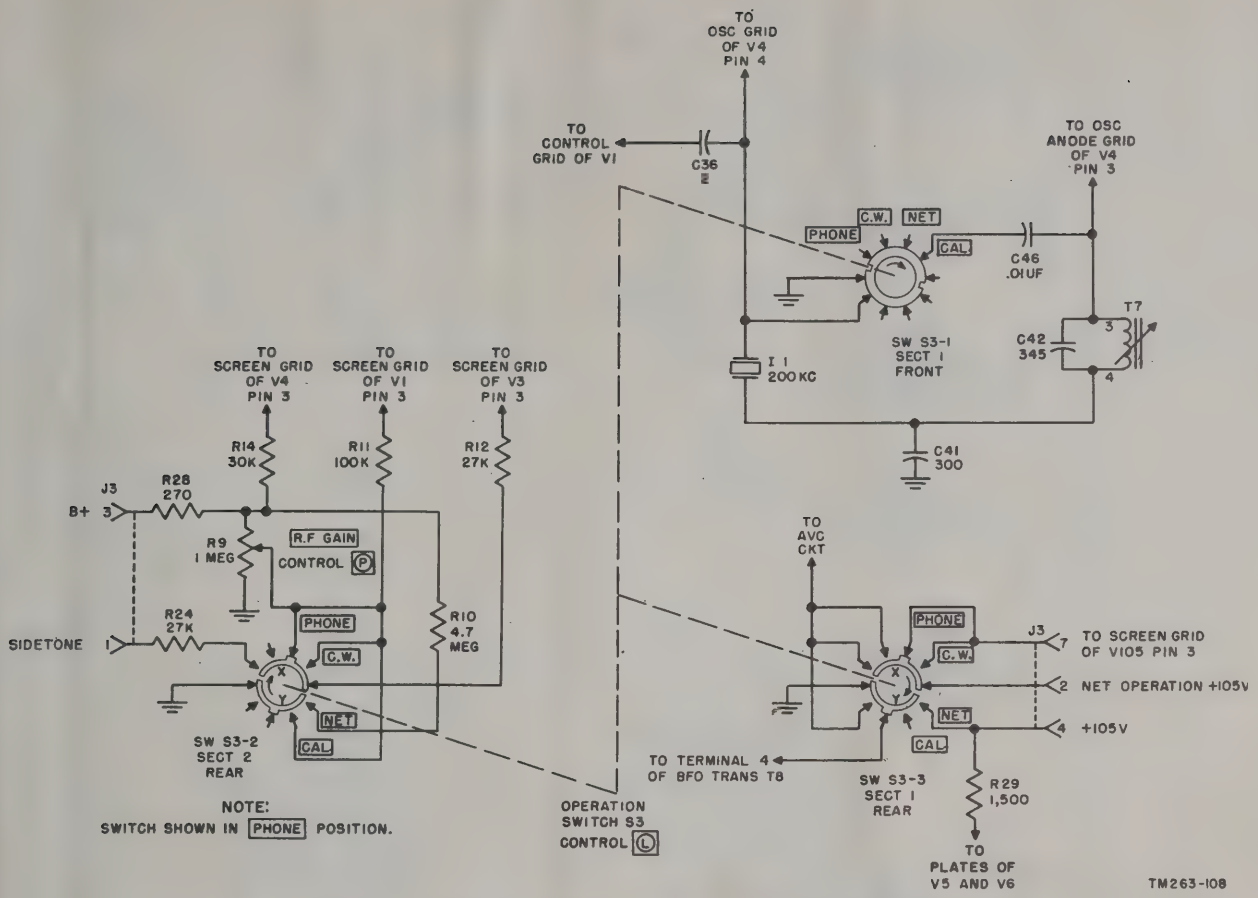

Figure 65. Operation switch S3, simplified schematic diagram.

tor, generator, or dynamotor power supplies (fig. 54) to male socket J102 which, in turn, is connected to OFF-SEND-STANDBY switch section S103-C, control Ⓔ. Battery BA–48 is also connected to S103C by Cord–1119 connected to male socket J103 and is, in effect, in parallel with the generator, ac, vibrator, or dynamotor power supplies. Control Ⓔ allows the battery to be used for the STANDBY position only. In the SEND position, any of the other power supplies may be used.

b. Switch section S103C then leads to female transmitter socket J106 which is connected by the receiver-transmitter cable to female receiver socket J3. Socket J3 is connected to PHONES jacks J1 and J2. These jacks also act as a switch; when a headset or loudspeaker is not plugged into the jack, the filament circuit is disconnected and no tubes can light.

c. When DIAL LIGHT-PUSH switch S2, control Ⓚ, is pressed, the shorting bar of the switch is moved from contacts 1 and 2 to contacts 3 and 4. Thus, pin 7 of V6 is disconnected from the +1.4 volts and dial light E1 is connected to the +1.4 volts in its place.

d. The filament of V2 is connected to hf oscillator coil by band switch section S1E, control Ⓜ (fig. 59).

98. Receiver Plate and Screen Grid Circuits (fig. 67)

The plates of tubes V5 and V6 receive their voltage through dropping resistor R29 connected to pin 4 of J3; the plate and screen currents of the other tubes pass through resistor R28 which is connected to pin 3 of J3. This is done so that the low-frequency audio signals of V5 and V6 cannot modulate the rf signals in the other tubes, or cause oscillations, which might occur if allowed to pass through the same dropping resistor used by the rf and if. stages.

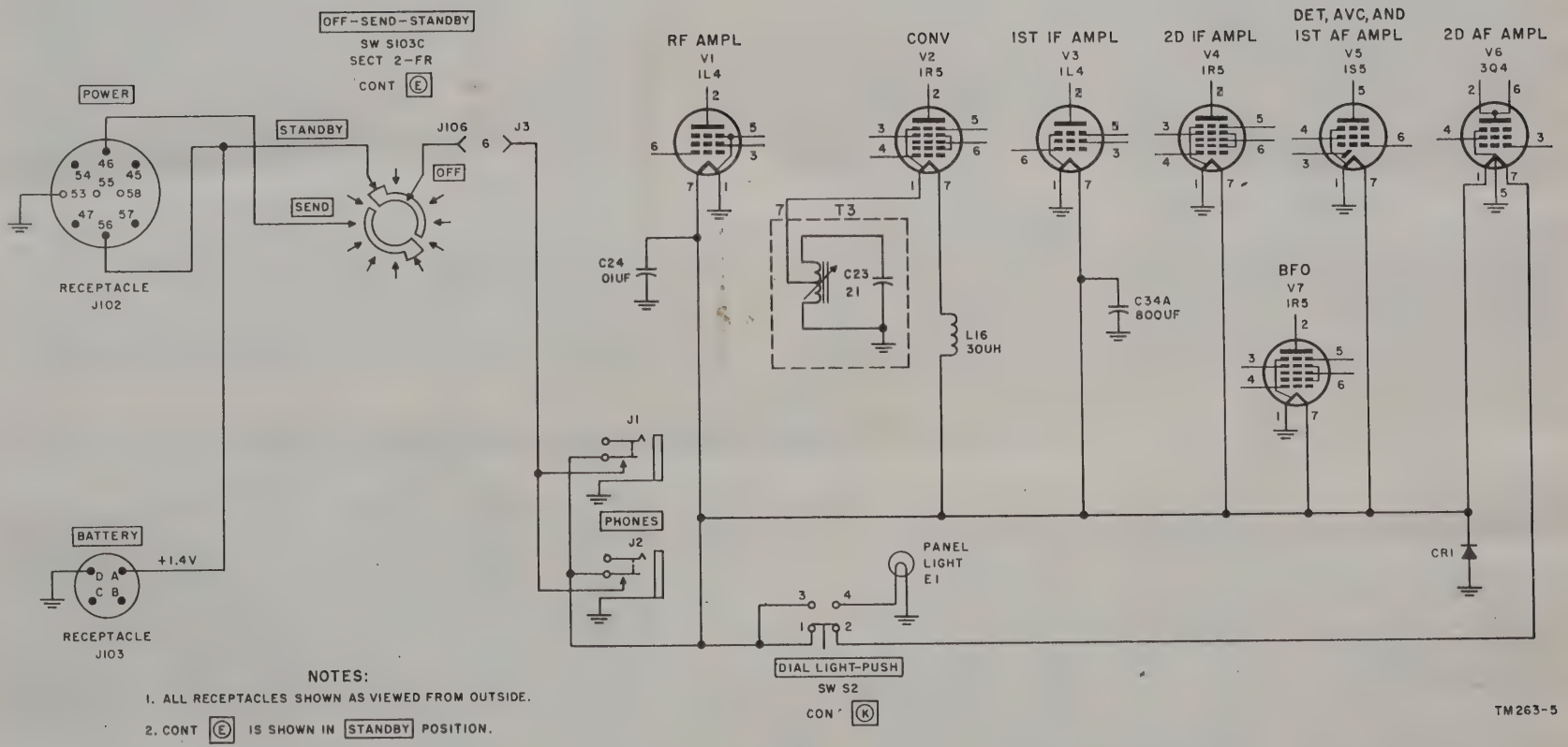

Figure 66. Receiver filament circuit.

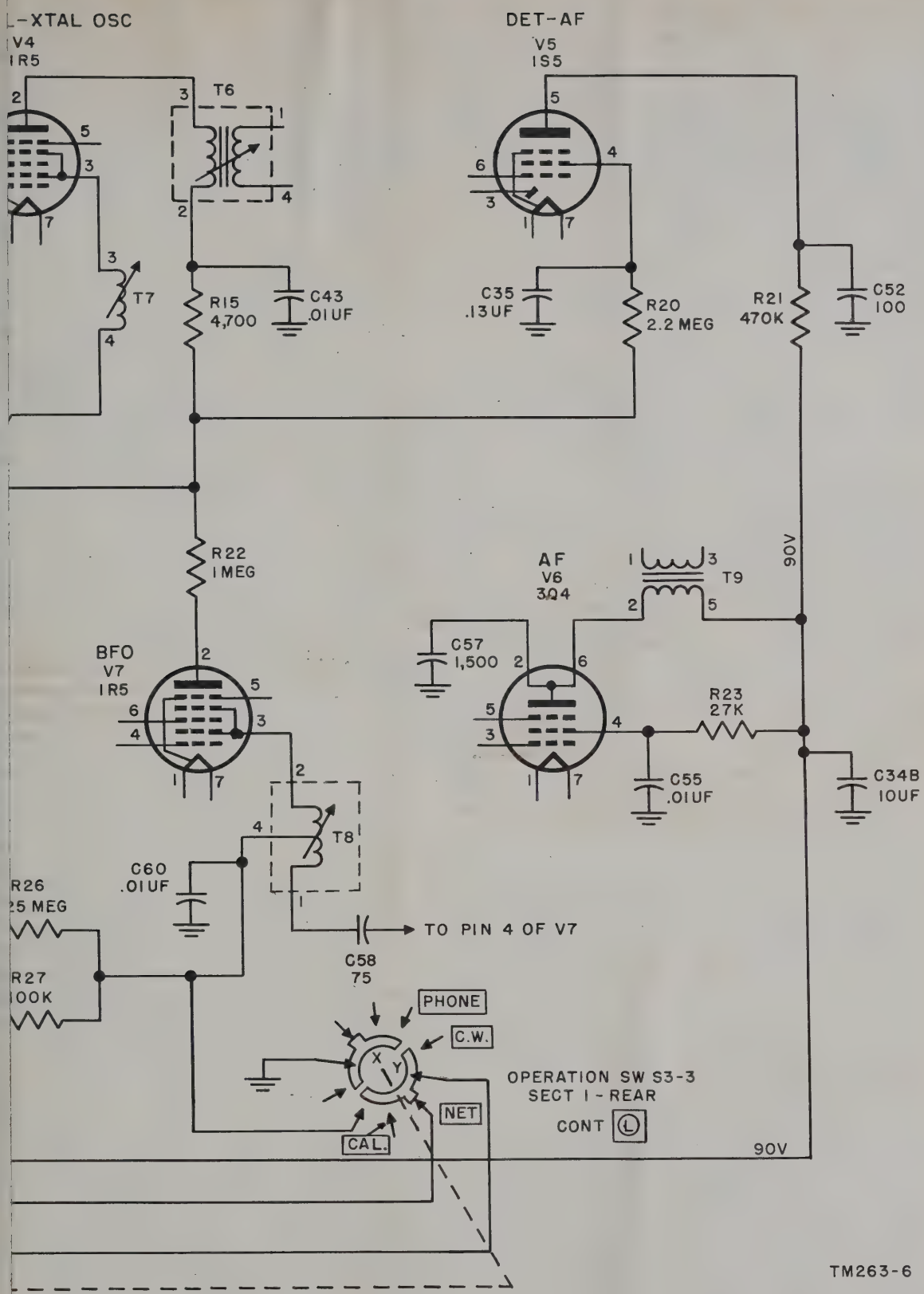
L-XTAL OSC
V4
1R5
T6
T7
R15
4,700
C43
.01UF
DET-AF
V5
1S5
C35
.13UF
R20
2.2 MEG
R21
470K
C52
100
90V
R22
1MEG
AF
V6
3Q4
T9
C57
1,500
R23
27K
C55
.01UF
C34B
10UF
BFO
V7
1R5
T8
C60
.01UF
R26
25 MEG
R27
100K
TO PIN 4 OF V7
C58
75
PHONE
C.W.
NET
CAL.
OPERATION SW S3-3
SECT 1 - REAR
CONT
90V
TM263-6

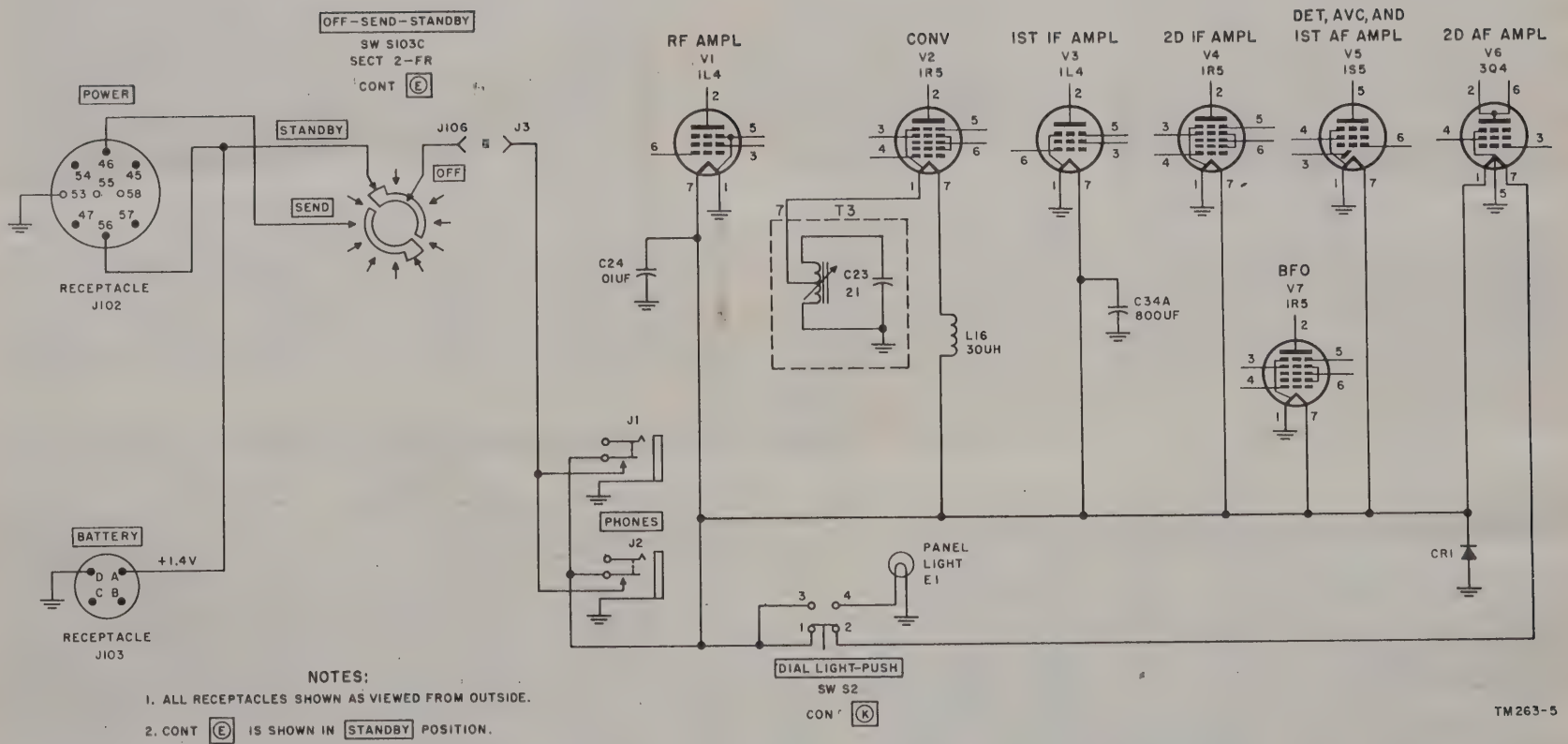

Figure 66. Receiver filament circuit.

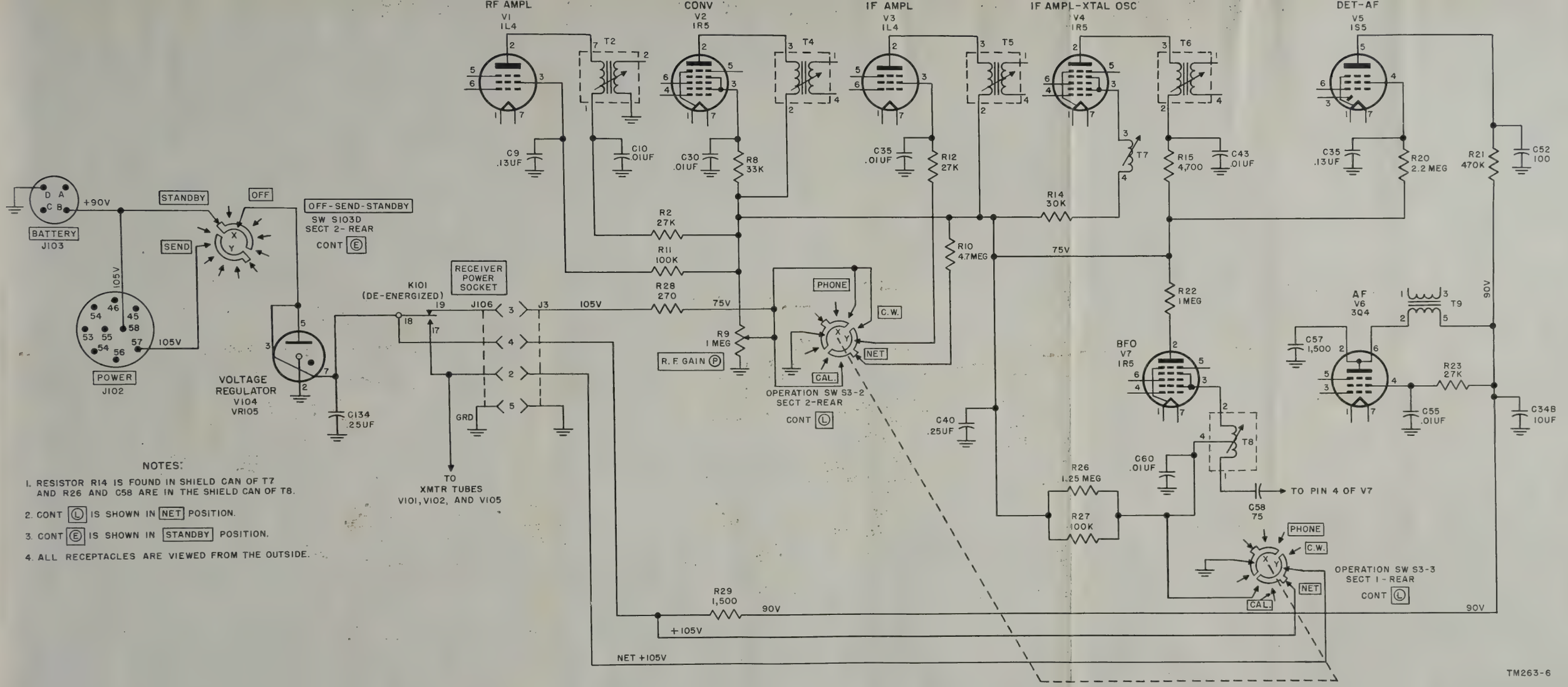

NOTES:

1. RESISTOR R14 IS FOUND IN SHIELD CAN OF T7 AND R26 AND C58 ARE IN THE SHIELD CAN OF T8.
2. CONT (L) IS SHOWN IN NET POSITION.
3. CONT (E) IS SHOWN IN STANDBY POSITION.
4. ALL RECEPTACLES ARE VIEWED FROM THE OUTSIDE.

Figure 67. Receiver plate and screen B+ circuits.

405863 O - 56 (Face p. 96)

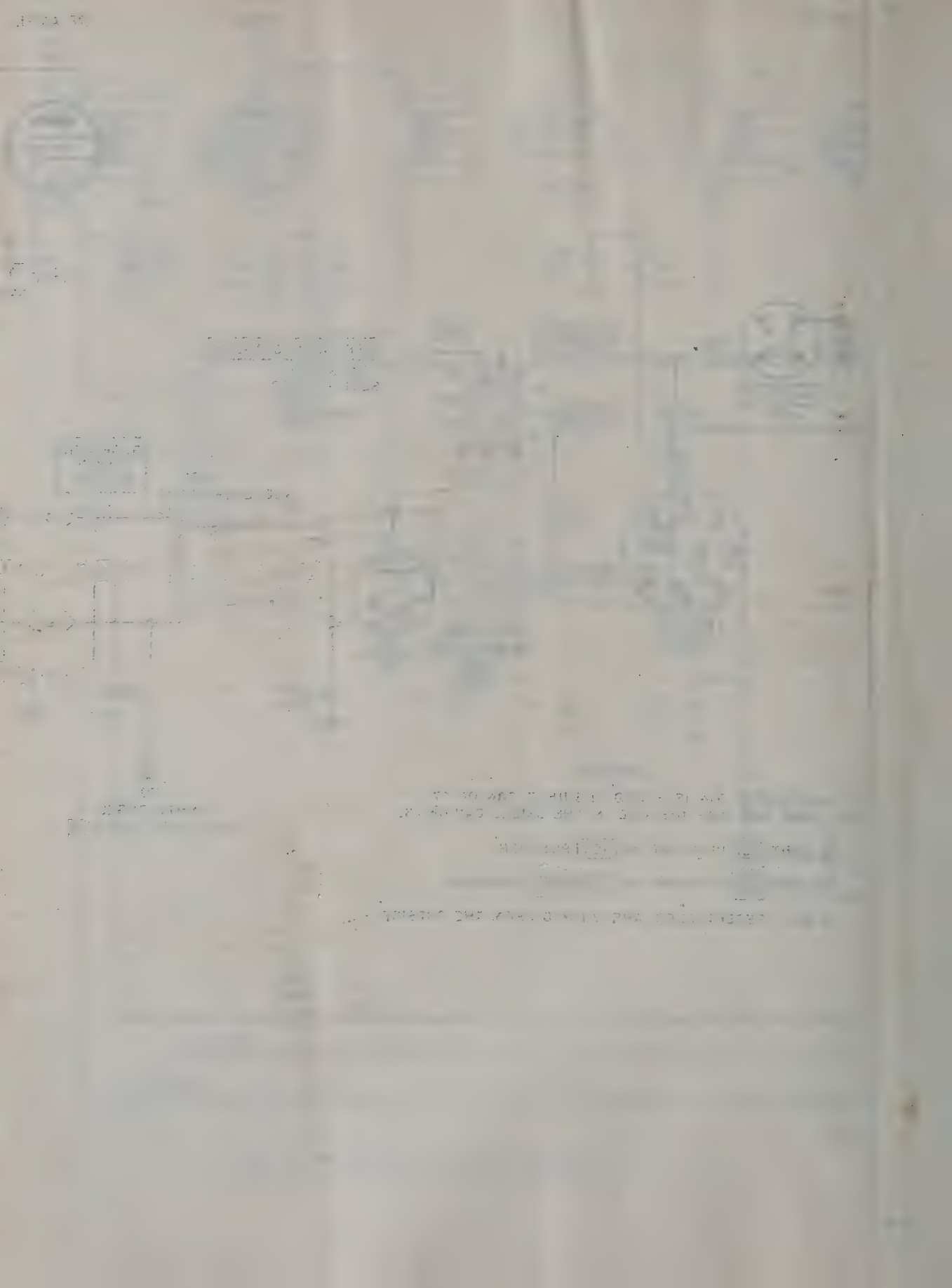

99. Receiver B+ Switching Circuits (fig. 67)

a. The plate and screen grid voltages are obtained from any of the power supplies available. Either the generator, vibrator, or dynamotor power supplies may be selected by Cord CD–1086 (A, fig. 54) and the battery may be selected by Cord CD–1119 (C, fig. 54).

b. The selected power supply is connected through Cord CD–1086 to transmitter receptacle J102. Receptacle J102 is then connected to switch section S103D, control Ⓔ, which determines if the battery is to be used instead of one of the other supplies. The contact marked STANDBY is connected to pin B on the battery plug and to pin 58 on J102. Pin 58 is connected by Cord CD–1086 to pin 33 on either power supply receptacle (fig. 94) as follows: 240 on Generator GN–58–(*), 734 on Vibrator Power Supply PE–237, J1 on Power Supply PP–327 (*)/GRC–9Y, J202 on Dynamotor-Power Supply DY–88/GRC–9, and J2 on Dynamotor-Power Supply DY–105/GRC–9X. The generator power supply wiring diagram (fig. 168) shows that pin 33 is not connected to anything. Therefore, on the STANDBY position of control Ⓔ, only the battery supplies power to the receiver. Pin 33, on the other power supplies mentioned above, is connected to +105 volts to supply power to the receiver during standby operation. On the SEND position of control Ⓔ, the battery power supply is disconnected, and the receiver is connected through pin 57 on J102 to pin 21 on the other power supplies to receive power (+105 volts) for operation. See the table given in figure 176 for the functional relationship between the pins on the receptacles located on the receiver-transmitter and the pins on the receptacles located on the power supplies.

c. From switch section S103D, the voltage is applied across tube V104, a voltage regulator which keeps the voltage that is fed to the plate circuit equal to exactly 105 volts. The output of tube V104, pin 5, is externally connected to pin 3 which is internally connected to pin 7. Pin 7 is then connected to pin 4 on terminal board J106 and to contact 18 on keying relay K101. Relay K101 further determines whether pin 3 or pin 2 is to be connected to the supply voltage. Pin 4 is constantly energized, regardless of the position of relay K101, because it is directly connected to pin 7 of voltage regulator tube V105.

d. Transmitter receptacle J106 is connected to the receiver receptacle J3 through the receiver-transmitter interconnecting cable (fig. 54). The plate voltages of tubes V5 and V6 only are obtained from pin 4 of J3. All other plate and screen voltages are obtained from pin 3 on J3.

e. When the transmitter section is not in use, contact 19 of relay K101 is connected with contact 18 to the power supply, and all of the receiver tubes receive plate and screen grid voltage. However, when the key is pressed or the press-to-talk switch on the microphone is pushed, relay K101 disconnects contact 19 and connects contact 17 to the power supply. The disconnection of contact 19 removes screen voltage from all tubes, and plate voltage from all tubes except V5 and V6.

f. To tune the transmitter to the receiver frequency for net operation, both the transmitter and receiver must operate simultaneously. Because of relay K101, only the receiver or the transmitter may function at one time, depending on the position of the key or the microphone button. If the handkey is left up, the receiver will automatically obtain voltage since relay contacts 18 and 19 will remain closed. Thus, it will be necessary only to short contacts 18 and 17 by some external means, to provide voltage to the transmitter. This is the function of switch S3–3, control Ⓛ. Relay contact 17 is connected to pin 2 on receptacle J106, which is, in turn, connected by the receiver-transmitter interconnecting cable to pin 2 of receptacle J3 in the receiver. Pin 2 of receptacle J3 connects to the rotor of switch S3–3. When switch S3–3 is placed on NET, pin 2 is directly connected to pin 4 on receptacle J3. This effectively shorts contacts 17 and 18 of relay K101, thus supplying voltage to the transmitter tubes V101, V102, and V105.

100. Block Diagram (fig. 68)

a. General. The transmitter section of Receiver-Transmitter RT–77(*)/GRC consists of a mo (master oscillator), frequency doubler, pa (power amplifier), and a modulator stage. The transmitter provides cw, mcw, and voice modulated signals over a frequency range of 2.0 to 12.0 mc. Provisions are made in the modulator unit for application of the key or mike (microphone). The block diagram shows the signal path through the transmitter. A complete schematic diagram is shown in figure 176. The same antenna is used for transmitting and receiving, depending upon the keying relay position.

b. Block Diagram. The block diagram shows the mo stage, which can be either self-excited or crystal-controlled. The mo supplies an rf signal to the doubler stage whose output circuit is tuned to the second harmonic of the input signal. The output of this stage is fed to the input circuit of the pa stage at sufficient power level to drive the pa as a class C amplifier. The modulator circuit supplies the af power necessary to modulate the pa during am and mcw operation, and furnishes a sidetone signal during cw, am, and mcw operation for monitoring in the receiver headset. The output of the pa is then coupled to the antenna through the keying relay.

101. Master Oscillator (Self-Excited) (fig. 69)

a. The oscillator section uses tube V101, type 3A4, as either a self-excited or as a crystal-controlled oscillator. Tube V101, acting as a crystal-controlled oscillator, is described in paragraph 102.

b. Tube V101 acts as a tuned plate oscillator in the self-excited position. The coupling necessary to sustain oscillations is produced magnetically by the plate and grid circuit coils of assembly T101.

c. Considering band 1 only, the plate circuit consists of the coil, variable capacitors C106B (alignment trimmer), C102 (OSC. CAL. CONTROL Ⓗ), and C101A (FREQ. CONTROL Ⓘ), and fixed capacitors C129 and C149. Capacitor C149 is a temperature compensating capacitor. In early units, C149 is referenced as C146 and its capacity was 6.5 $\mu\mu$f. The grid circuit consists of the tickler coil and the grid-leak bias combination of C105 and R102. During operation, control Ⓘ tunes the transmitter to any frequency from 6.6 to 12.0 mc. Control Ⓘ is a ganged plug-in type capacitor. Capacitor C101A is ganged to C101B in the doubler circuit and C101C in the pa stage. The fixed plates of C101A are connected to plug P101A and are connected to the other components by P101A plugged into socket J101A.

d. Plate voltage to V101 is applied through filter resistor R103 which is bypassed for rf by

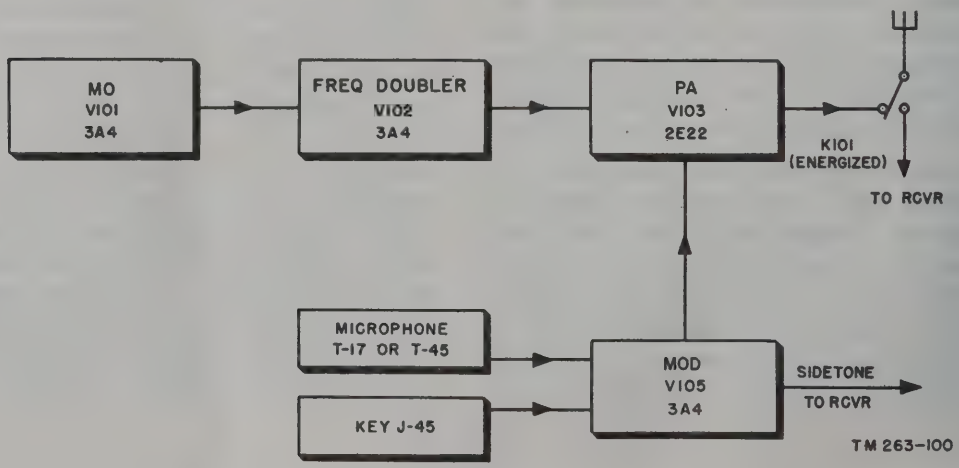

Figure 68. Block diagram of transmitter.

filter capacitor C104. Screen grid voltage is fed through dropping resistor R101 which is bypassed for rf by capacitor C103.

e. The output from the oscillator is fed through capacitor C109 to the control grid of doubler V102.

f. To improve the temperature-compensating characteristics of the receiver-transmitter, all units on Orders No. 3142 and 3143-Phila-51 incorporate the changes outlined in subparagraphs 1 and 2 below.

(1) Capacitor C146 is eliminated.

(2) Temperature-compensating capacitors C149 and C150 are installed inside the oscillator-coil cans, T101 and T102, in parallel with trimmer capacitors C106B and C107A, respectively. Temperature-compensating capacitor C151 is installed outside the oscillator-coil can in parallel with trimmer capacitor C108. Replacement instructions for T101, T102, and T103 for units having serial numbers below 12100 are given in paragraph 216.

102. Master Oscillator (Crystal-Controlled) (fig. 70)

a. When mo tube V101 is used as a crystal oscillator instead of a self-excited type, the following changes in the circuit are made:

(1) The lower end of tickler coil winding, terminal 4, and the lower ends of capacitors C103 and C129 are removed from ground and connected to each other.

(2) Crystal Y101 is connected between the junction formed in (1) above and ground.

b. When the tuned circuit is adjusted to the crystal frequency, the circuit will oscillate because the combination of capacitor C103 and the crystal results in a low-impedance in the

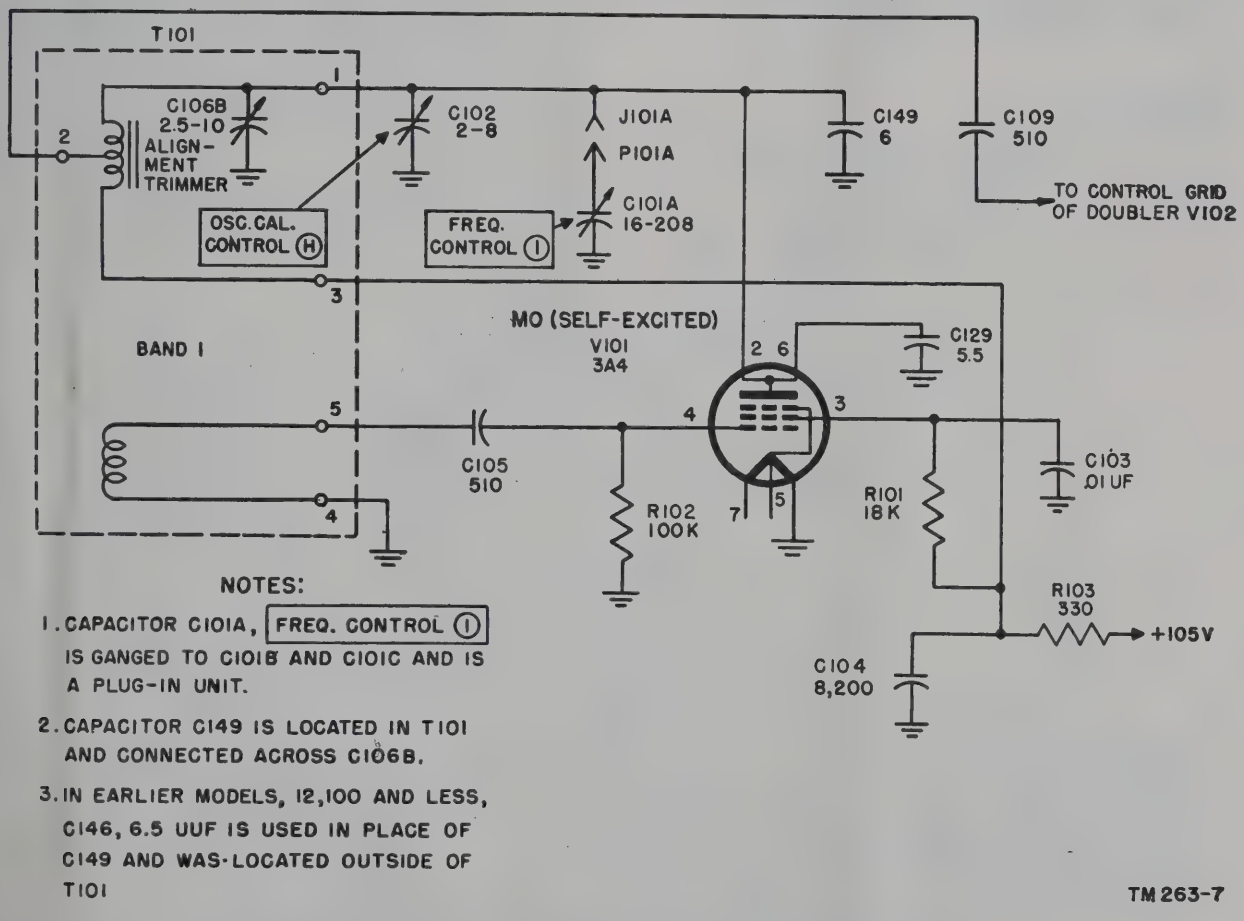
T101
C106B 2.5-10 ALIGN-MENT TRIMMER
C102 2-8
J101A
P101A
C101A 16-208
C149 6
C109 510
TO CONTROL GRID OF DOUBLER V102
OSC. CAL. CONTROL (H)
FREQ. CONTROL (1)
BAND 1
MO (SELF-EXCITED) V101 3A4
C129 5.5
C105 510
R102 100K
R101 18K
C103 .01 UF
R103 330
+105V
C104 8,200
NOTES:
1. CAPACITOR C101A, FREQ. CONTROL (1) IS GANGED TO C101B AND C101C AND IS A PLUG-IN UNIT.
2. CAPACITOR C149 IS LOCATED IN T101 AND CONNECTED ACROSS C106B.
3. IN EARLIER MODELS, 12,100 AND LESS, C146, 6.5 UUF IS USED IN PLACE OF C149 AND WAS LOCATED OUTSIDE OF T101
TM 263-7

Figure 69. Mo (self-excited), simplified schematic diagram.

screen grid circuit. Screen grid capacitor C103, an rf bypass for the mo working as a self-excited oscillator, becomes the coupling capacitor from the screen grid to the crystal. If the circuit is tuned to any other frequency but the crystal frequency, the resultant high-impedance circuit is not effectively bypassed to ground and the oscillation will cease since neither the screen grid nor the low rf side of the feed-back winding in the oscillator grid, pin 4, circuit is effectively bypassed to ground.

c. Capacitor C129, which connects from the tube plate to the crystal, is used to provide degenerative feedback from the plate circuit to the crystal. This circuit allows crystals of a wide range of activities to be used. The plate circuit is tuned to the crystal frequency by ganged capacitor C101A, FREQ. CONTROL ⓘ.

d. The plate tuning, plate and screen dc voltage circuits, grid-leak bias, and decoupling network operate in the same manner as when V101 is used as a self-excited oscillator.

103. Switch S101, Mo Sections

Seven sections of switch S101, control Ⓕ, are associated with the oscillator circuit of V101. The sections of the switch used with the mo stage, self-excited or crystal, are described as follows:

a. Switch Sections Used With Mo As Self-Excited Oscillator. When switch S101 is placed at one of the MO positions, V101 functions as a self-excited oscillator. Sections A, B, C, D, E, F, and G perform as follows:

(1) *Switch section S101A* (fig. 71). Section A of S101 determines which of the three plate circuit coils is to be used. Section A connects the plate of V101 to coil terminals 1 and 3 of transformer T101 (BAND 1) as shown by the weighted line in the figure.

(2) *Switch section S101B* (fig. 71). Section B of S101 shorts out the other unused plate coils so as to prevent interaction with the coil circuit being

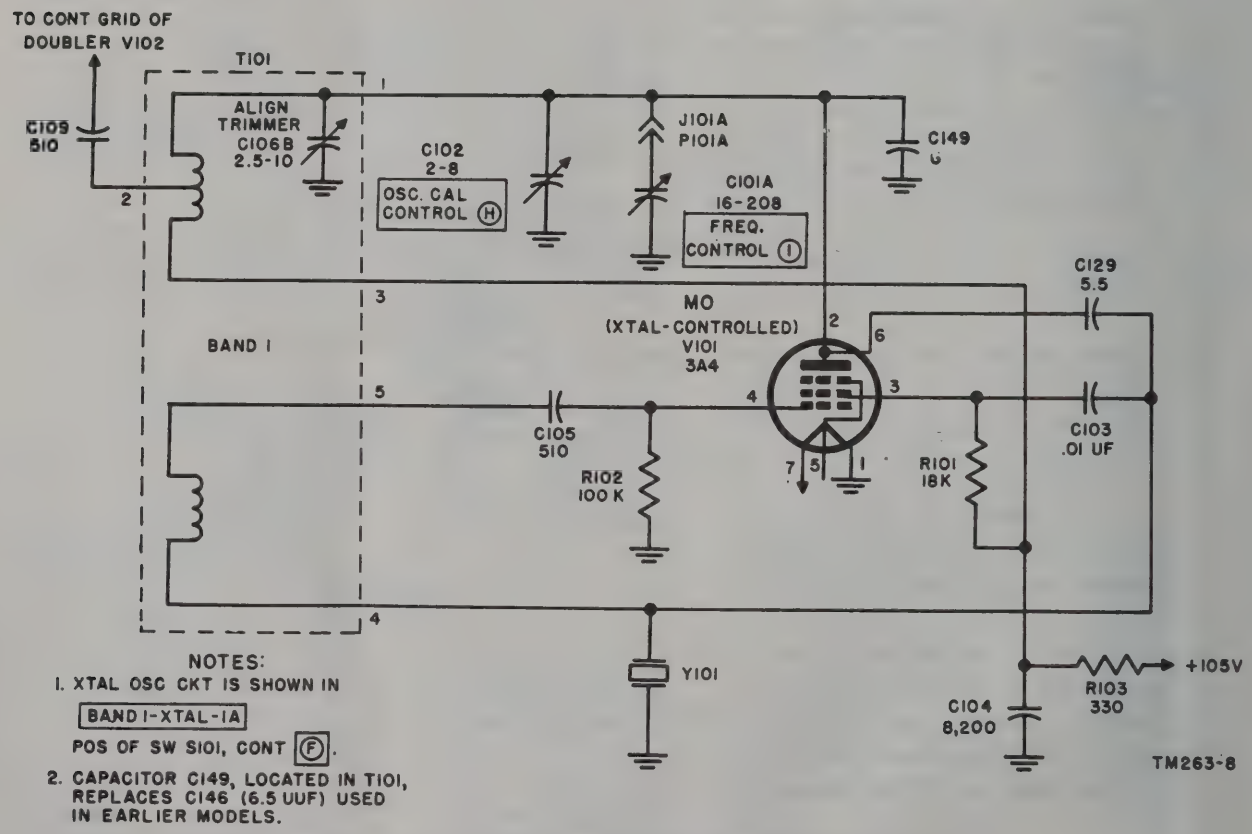

Figure 70. Mo (crystal-controlled), simplified schematic diagram.

used; such interaction tends to cause undesirable parasitic oscillations.

(3) *Switch section S101C* (fig. 72). Section C of S101 selects the proper grid circuit coil for the frequency selected. This is done in conjunction with switch sections S101D, S101E, and S-101F which connect the coil selected to the grid by capacitor C105. Since the entire bank of switches is ganged, the grid coil is automatically connected to the grid circuit. By following the weighted line, starting at the control grid of V101, the entire grid circuit path may be traced through the various switches.

(4) *Switch section S101D* (fig. 72). Section D of S101 connects the bottom (cold) end of the grid coil to ground through section E, as shown in the figure.

(5) *Switch section S101E* (fig. 72). The rotor of section E is permanently connected to ground and serves as the actual ground connection for the coil selected.

(6) *Switch section S101F* (fig. 72). Section F of S101 connects the selected coil to the grid of tube V101 through capacitor C105.

(7) *Switch section S101G* (fig. 71). Section G of S101 connects the rf voltage from the plate coil in use to the control grid of voltage doubler V102.

b. Switch Sections Used With Mo as Crystal-controlled Oscillator. When switch S101, control Ⓕ, is placed at one of the XTAL positions, V101 functions as a crystal oscillator. Sections D and E of S101 perform as follows (fig. 73):

(1) Section D of S101 selects one of six crystals to be used. In this figure, crystal 1A (Y101) is placed in the grid circuit. The circuit functions the same as in the self-excited position except that the crystal circuit is coupled to the screen. Screen grid capacitor C103 is coupled from the screen grid to the crystal and capacitor C129 is coupled from the plate to the crystal by the switch.

(2) Section E of S101 disconnects the ground from the crystal to be used, and connects to ground all unused crystals.

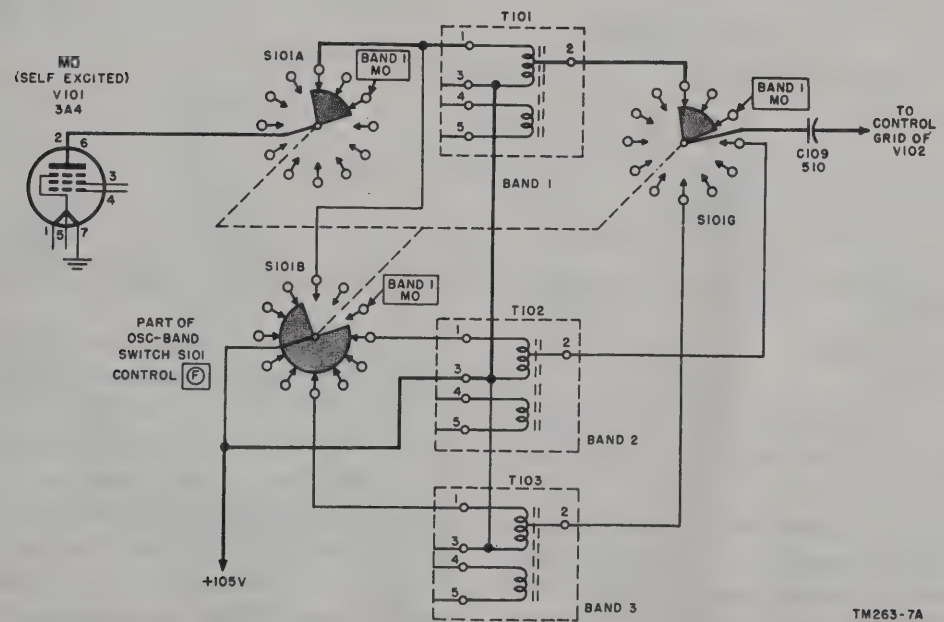

Figure 71. Mo (self-excited), switch sections S101A, S101B, and S101G, simplified schematic diagram.

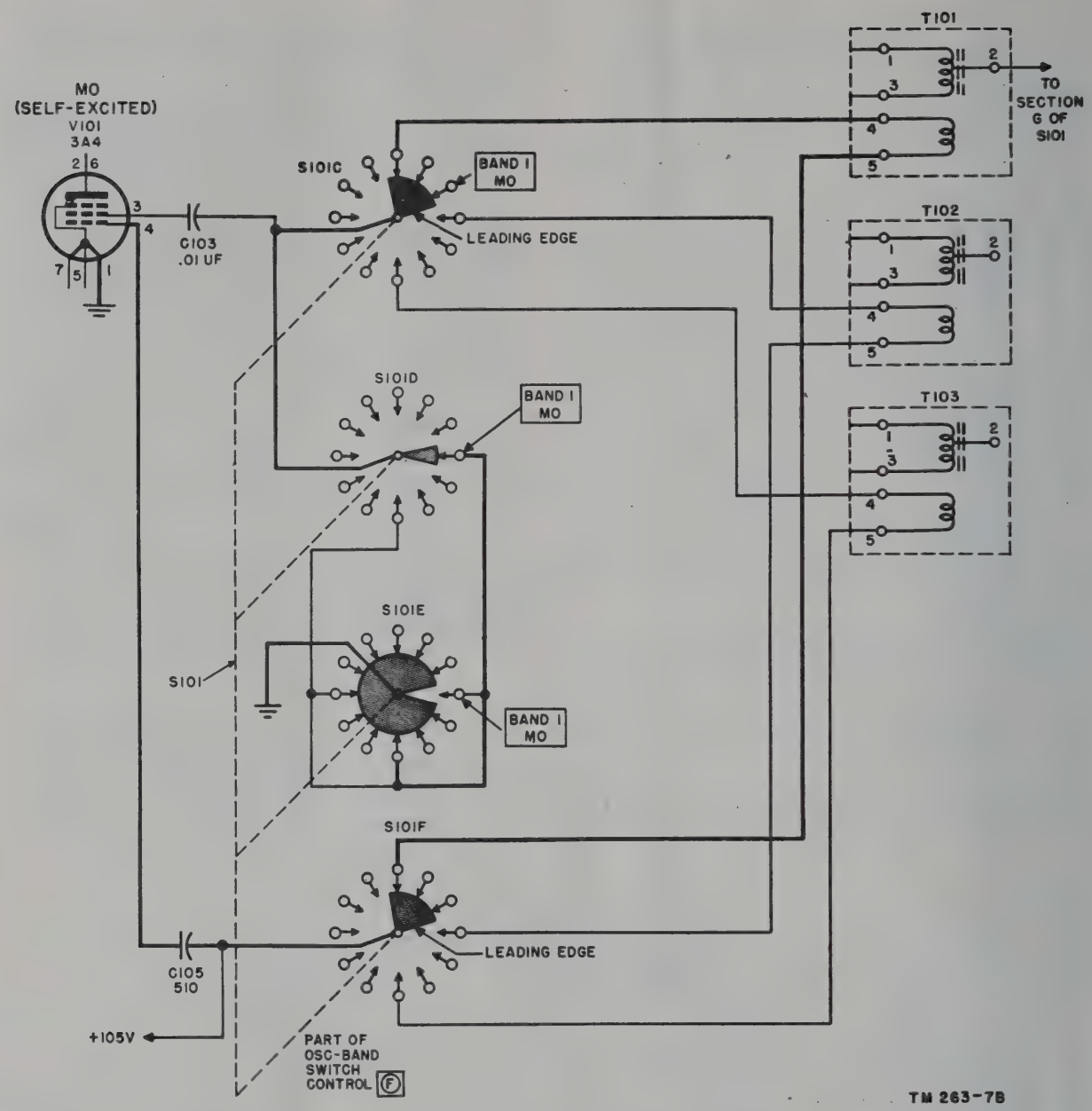

Figure 72. Mo (self-excited), switch sections S101C, S101D, S101E, and S101F, simplified schematic diagram.

104. Frequency Doubler (fig. 74)

a. The output of oscillator V101 is coupled to the frequency doubler stage V102, which uses tube type 3A4.

b. The doubler is operated as a class C amplifier, biased approximately at four times cutoff, to produce a strong second harmonic. Capacitor C109 and resistor R104 form the grid-leak bias circuit. The tuned tank coil in the plate circuit is tuned to resonance at a frequency just twice that of the incoming oscillator signal. Thus, the signal passed to the pa stage is always two times the frequency rate of the oscillator.

c. The input signal is coupled to the control grid of the doubler stage by capacitor C109 and grid return resistor R104. The load in the plate circuit of V102 consists of a parallel resonant circuit, using T104A which is slug-tuned, alignment capacitor C111, fixed capacitor C147, and

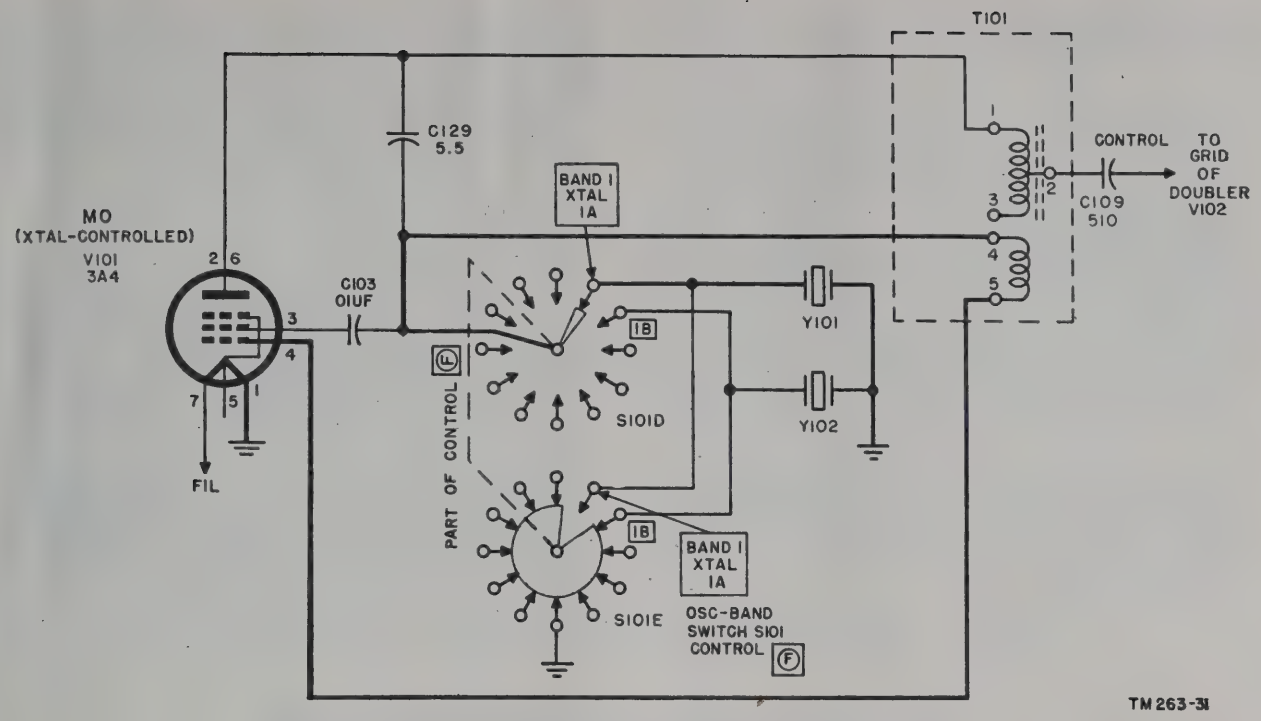

Figure 73. Mo (crystal-controlled), switch sections S101D and S101E.

ganged tuning capacitor C101B, FREQ. CONTROL ①. Capacitor C114 completes the rf circuit from the cold end of the coil of T104 to ground. Capacitor C101B is connected to jack J101 through plug P101B by means of the plug-in type of ganged tuning capacitor used. Capacitor C110 is used to block the dc plate voltage from the tuned circuit.

d. The plate of V102 is shunt-fed through choke coil L101 in series with dropping resistor R105. The voltage to the screen is made lower than the plate voltage by means of dropping resistor R120. The combination of R120 and R105 is bypassed to ground, for rf screen current, through capacitor C142.

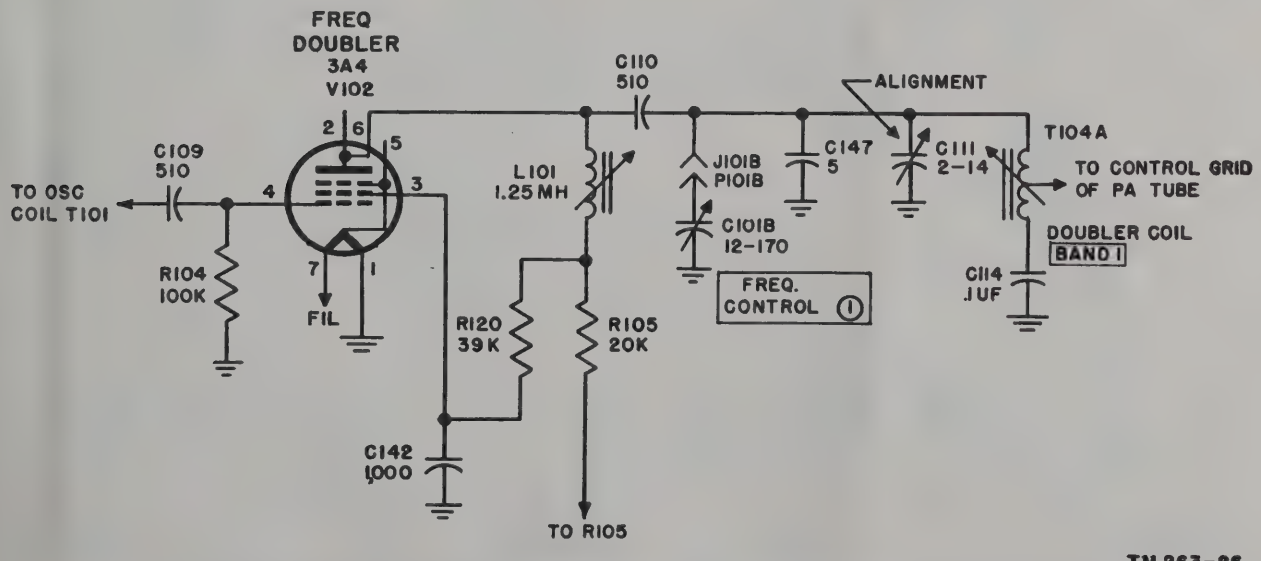

Figure 74. Frequency doubler, simplified schematic diagram.

105. Switch Sections S101H, S101I, and S101J (fig. 75)

Switch sections S101H, S101I, and S101J (control Ⓕ), are associated with the doubler circuit of V102. They are described as follows:

a. Switch Section S101I. Switch section S-101I determines which of three plate coils of V102, one for each of the transmission bands, is connected to the plate of the tube. The weighted line traces out the signal path from the plate of V102, through capacitor C10 and section I of S101, and then to terminal 1 of T104A (BAND 1).

b. Switch Section S101H. Switch section S-101H shorts out the other two coils that are not being used to prevent interaction with the coil circuit selected.

c. Switch Section S101J. Switch section S101J connects the doubler output from the coil in use to the grid, pin 3, of power amplifier tube V103. This is shown by the weighted line in the figure starting from terminal 2 of T104A, through S-101J, to the control grid of V103.

106. Power Amplifier (fig. 76)

a. The pa stage uses V103, tube type 2E22 as a class C amplifier for transmission of either cw, mcw, or voice-modulated signals. Suppressor grid type of modulation is used for the pa tube.

b. The signal enters the pa grid, pin 3, from blocking-couping capacitor C110, and directly from the plate load coil, terminal 2, of the preceding doubler stage V102. After amplification

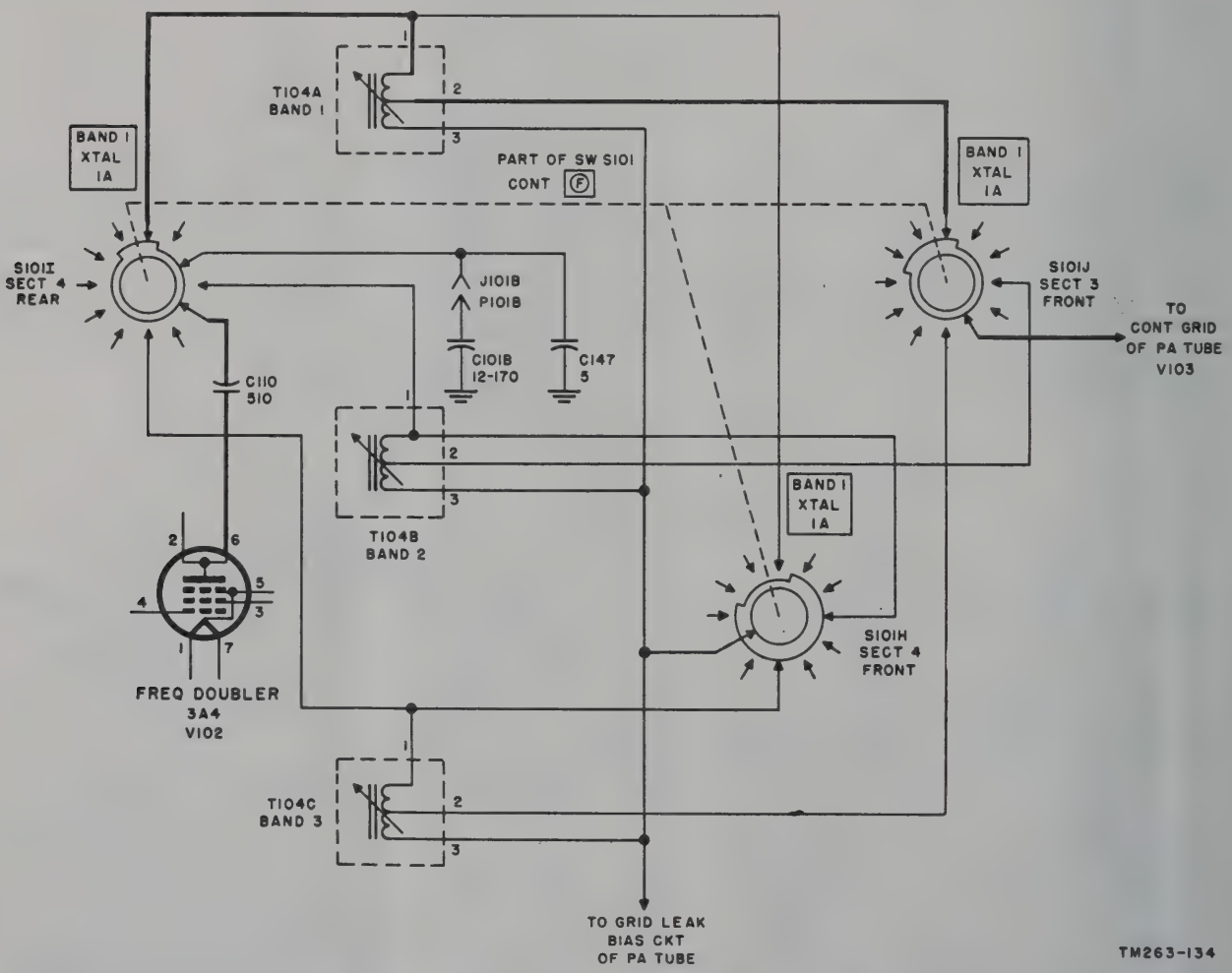

Figure 75. Doubler switch sections S101H, S101I, and S101J, simplified schematic diagram.

by the tube, the signal leaves the plate tank circuit through blocking-coupling capacitor C122 and enters one of several combinations of inductances and capacitances in the antenna circuit.

c. Capacitor C101B, along with C114 and the coil of T104A, performs the same action as described in the frequency doubler stage. The plate tank circuit (band 1 operation) is made up of the variable slug-tuned coil of pa transformer T107, alignment trimmer C118, rf ground return capacitor C121, and variable main tuning capacitor C101C. Capacitor C101C, FREQ. CONTROL ①, is ganged to C101A and C101B to complete the plug-in type used in the transmitter. The grid return is through resistor R106, relay coil K102A, and resistor R107; these three components along with C114 form the grid-leak bias circuit. The grid-leak bias of V103 also serves as a bias supply for the suppressor grid of V103 during am and mcw operation and for the control grid of modulator tube V105 during voice operation.

d. The screen and suppressor grids are bypassed to ground for rf by capacitors C116 and C117. Capacitor C139 bypasses to ground any af signals that could appear in the control grid circuit through relay K102 and resistor R-107 during voice or mcw operation. Filament pin 5 is grounded and filament pin 1 is connected to the positive side of the filament supply. Capacitor C115 bypasses to ground the unwanted rf pick-up of the filament lead to pin 1.

e. The suppressor grid, pin 4, is made to vary at an af rate by the audio signal fed to it through af transformer T113. The af variations on the suppressor grid cause the plate current to vary at the same rate, thus modulating the rf plate circuit.

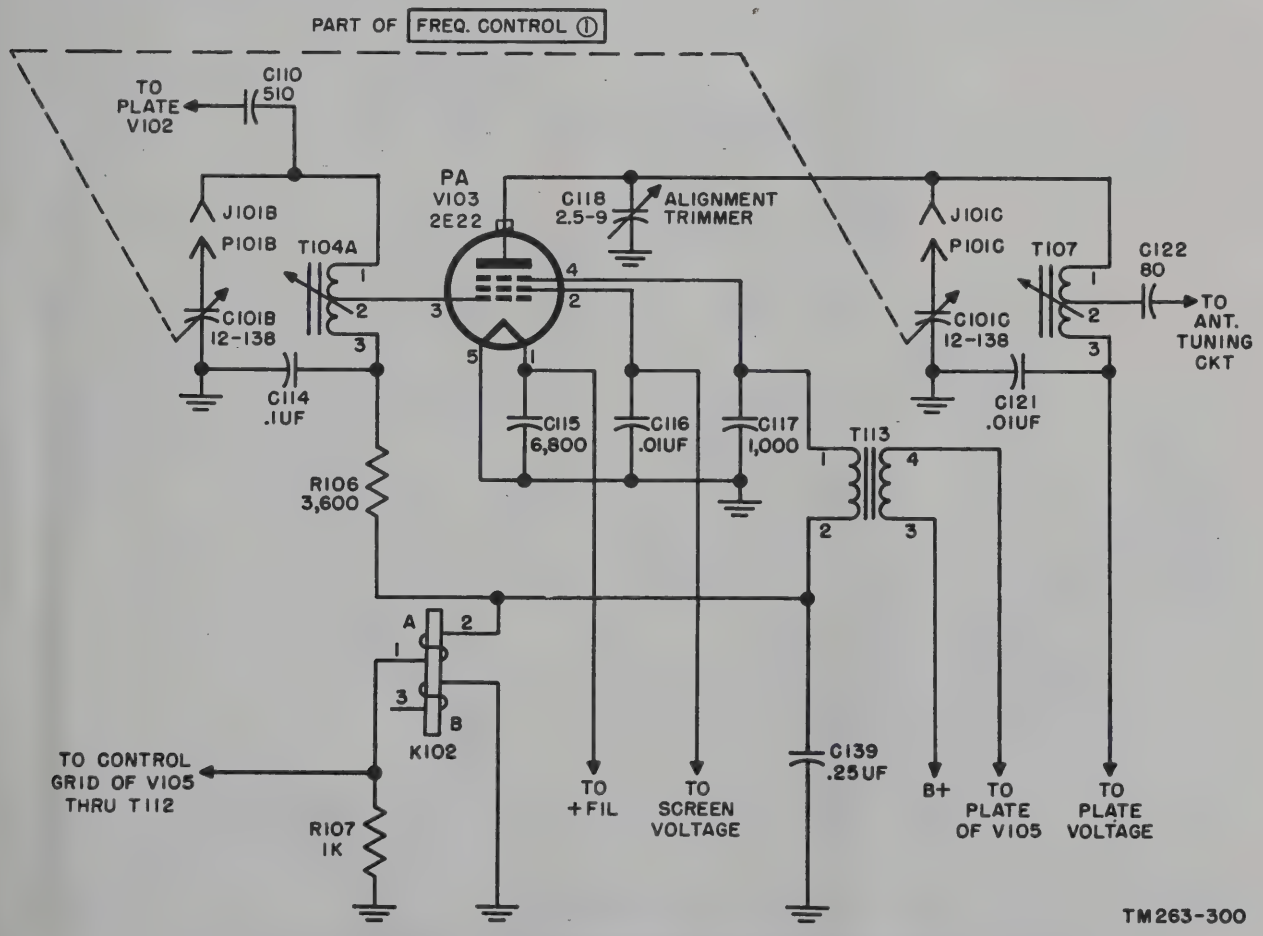

Figure 76. Pa stage, simplified schematic diagram.

107. Switch S101, Pa Plate Sections (fig.77)

Switch section S101K, S101L, and S101M (control Ⓕ) are associated with the plate circuit of V103. Considering the BAND 1-XTAL-1B position of S101, the switch sections are described as follows:

a. Switch Section S101L. The signal from the plate of V103 enters coil selector switch section S101L and is connected to either transformer T107, T108, and T109, depending upon the band of transmission desired. The bottoms of the plate coils are tied together and go to the positive side of the high voltage supply. Transformer T107 is an autotransformer and T108 and T109 are two-winding type transformers.

b. Switch Section S101K. Shorting switch section S101K shorts out those tuning coils which are not in use.

c. Switch Section S101M. Plate output selector switch section S101M selects the output from the plate coil in use and leads the signal to the top of L104 in all positions. For the continuation of this figure, see figure 81.

108. HI and LO Power Circuit

The power output of the pa stage is controlled by varying the screen grid voltage. The screen grid voltage determines, to a large extent, the current through the tube and, therefore, the power output. Resistor R124, the screen grid bleeder, stabilizes the screen grid voltage. Resistor R124 also forms a voltage divider system with the combination of resistors R117 and R-118 across the power supply. Thus, the voltage across R124 is the voltage applied to the screen grid of V103. There are two levels of output, LO and HI power, and these are selected by two of the four sections of modulator-power switch

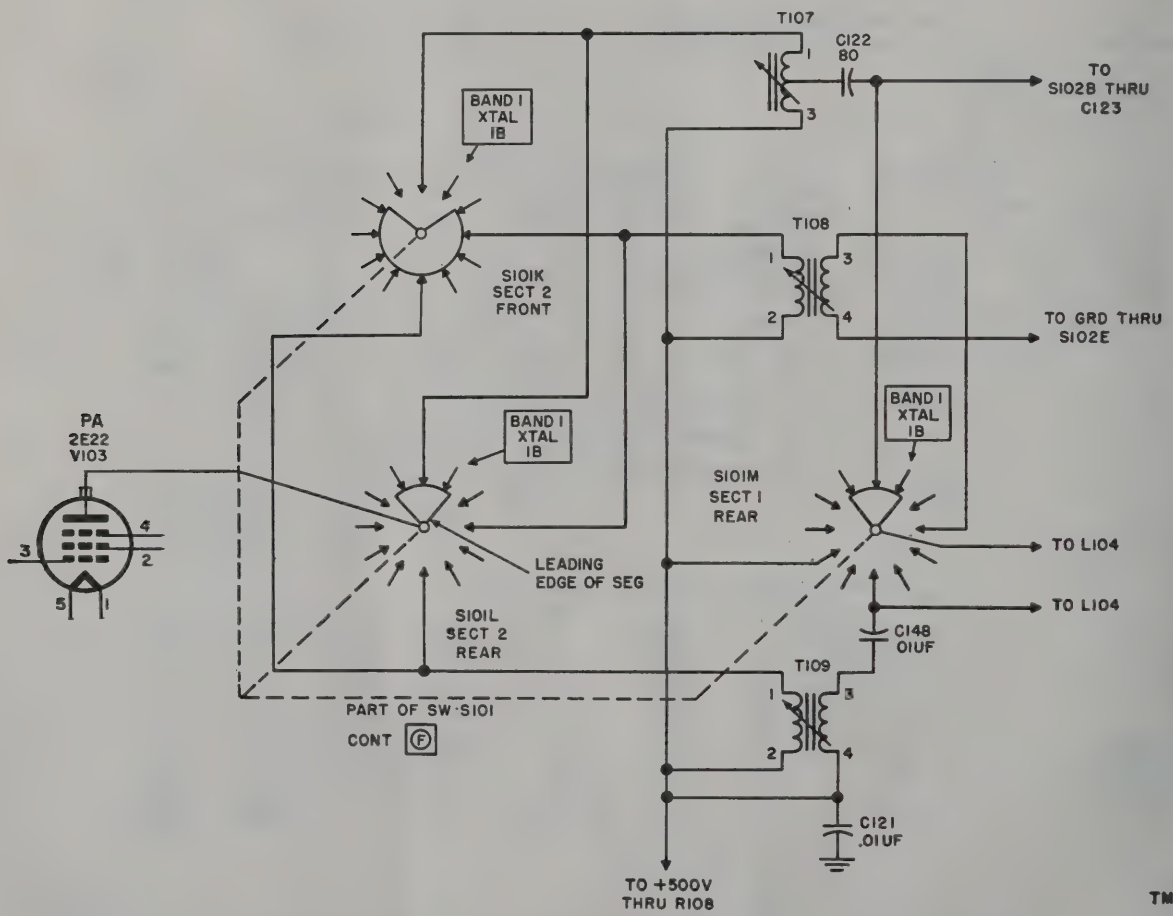

Figure 77. Pa switch sections S101K, S101L, and S101M, simplified schematic diagram.

S105, control Ⓓ. The two sections of S105, S-105–1 and S105–2, perform the power changes as follows:

a. LO Power Position (fig. 78). If the weighted line in the figure is followed from the screen grid, pin 2, of V103, it will be seen that the screen current passes through S105–1 and S105–2 to the series combination of resistors R117 and R118, and then to the power supply through the contacts of relays K102 and K101 (when energized). This series arrangement of the two resistors is the LO power circuit, since the screen of V103 is at a low potential because of the large drop across the series combination of R117 and R118.

b. HI Power Position (fig. 79). If the weighted line in the figure is followed from the screen grid, it will be seen that the screen current passes through the parallel combination of R117 and R118. There is less voltage drop across the parallel combination; thus, more voltage is placed on the screen grid.

109. Screen Grid Protective Circuit for V103 (fig. 80)

The pa tube is operated as a class C amplifier and the grid bias is developed by the dc grid current flowing through R106, winding A of overload relay K102, and R107 when a signal is applied to the control grid. If the grid excitation should fail, the bias would be lost and this would result in a plate current large enough to ruin the tube. Relays K101 and K102 provide a protective circuit for the tube. Overload relay K102 is actually a screen grid cutout relay which protects V103 in case of excitation failure. Relay K101 prevents screen grid voltage from appearing until the transmitter is placed in the operating position. See figures 78 and 79 for the proper circuitry of resistors R117 and R118.

a. Keying Relay K101. Contacts 9 and 10 of K101 are in series with contacts 5 and 4 of relay K102; hence, the deenergized position of either relay can prevent the voltage from being ap-

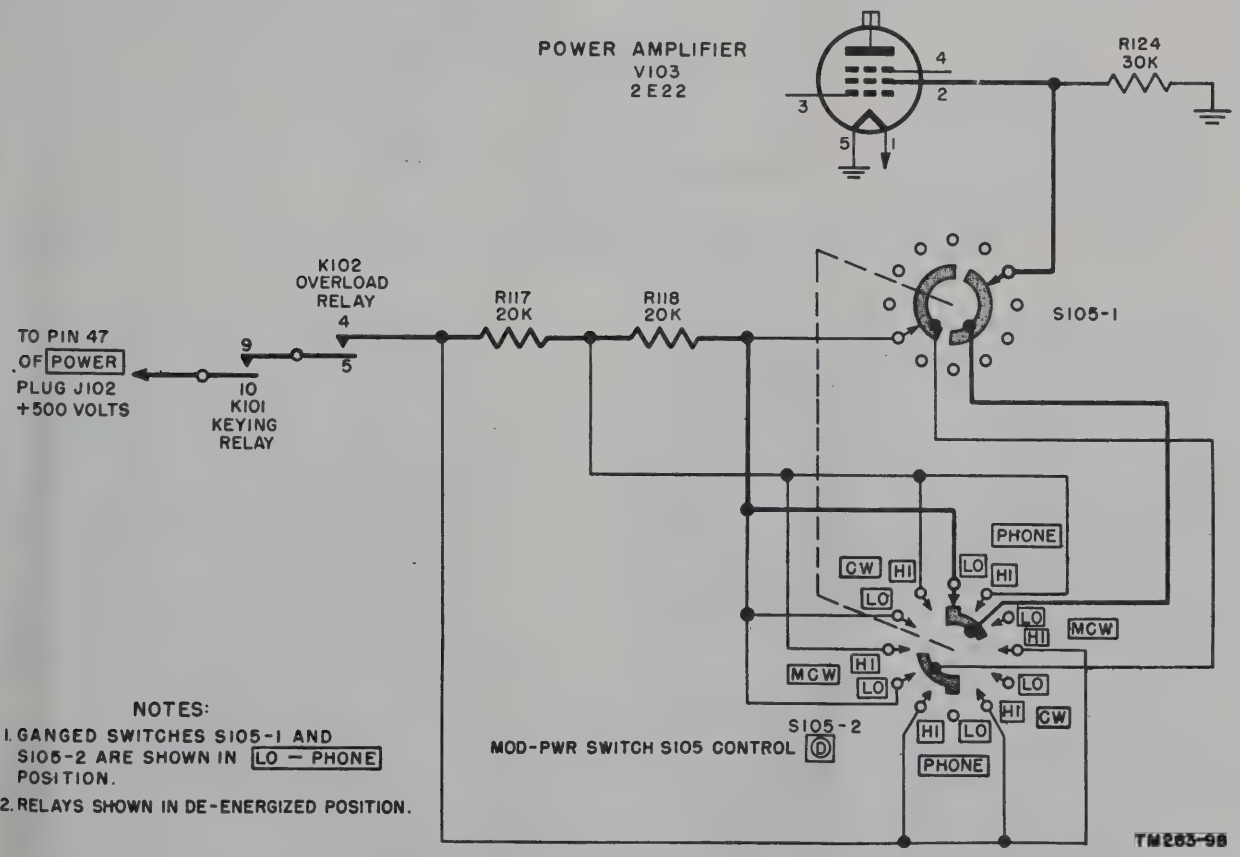

Figure 78. LO power position of control Ⓓ, simplified schematic diagram.

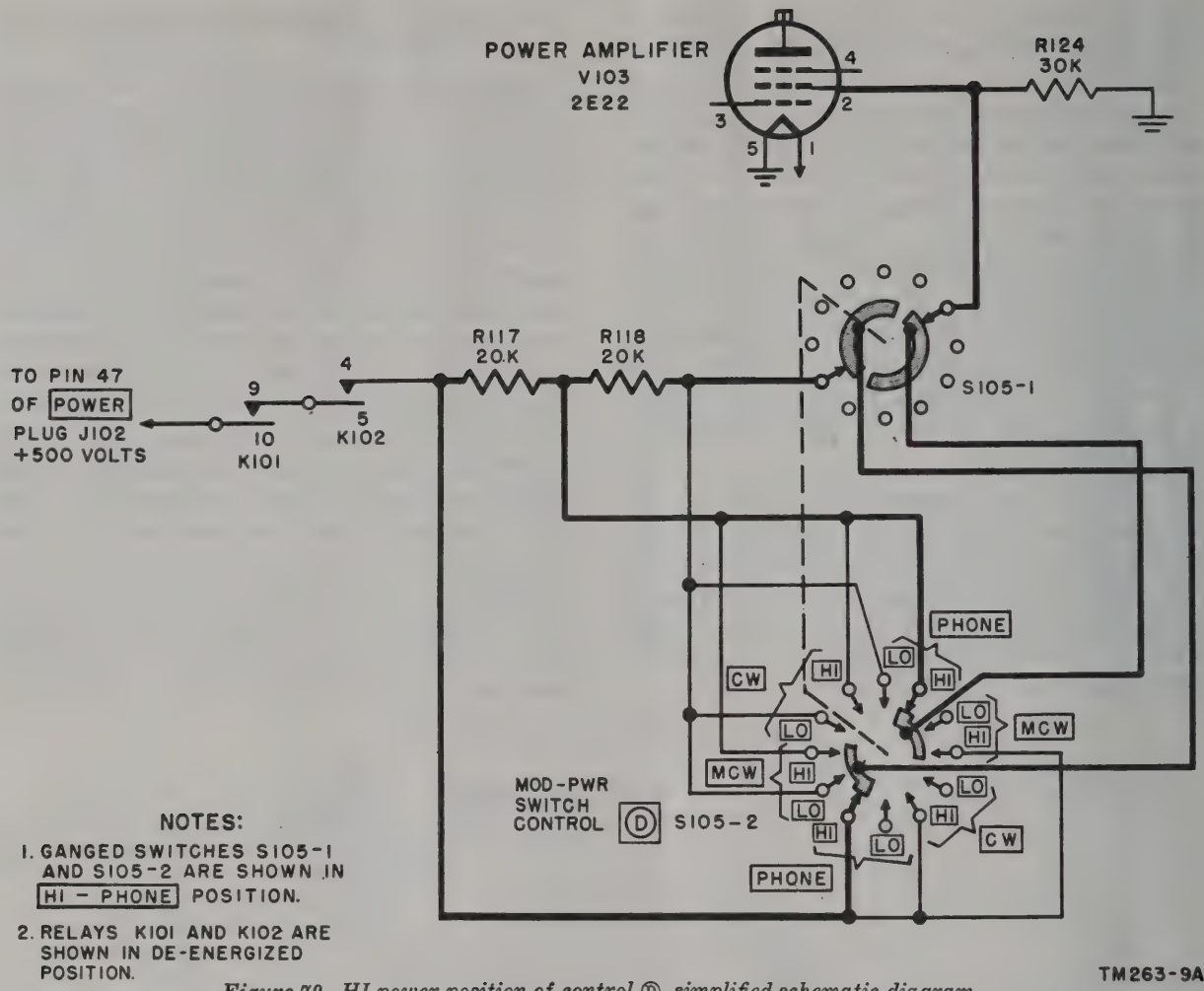

Figure 79. HI power position of control Ⓓ, simplified schematic diagram.

plied to the screen grid. Relay K101 is controlled by the keying circuit and is normally open, so that the screen grid does not receive any voltage and the power output of the transmitter is zero. This makes the transmitter inoperative while the receiver is being listened to. However, when the key is pressed or the press-to-talk switch on the microphone is pushed, relay coil K101 is energized and contacts 9 and 10 in the screen circuit of V103 are closed. These contacts permit screen current to flow and the transmitter is then in operation.

b. Screen Cutout Relay K102. Relay K102 has two windings, A and B, to provide a clean keying circuit as well as protecting the pa tube. Their functions are described as follows:

(1) *Relay coil K102A.* The contacts of relay K102A are located in series with the screen grid, but the relay coil is in series with the control grid, pin 3, of V103. Thus, the direct current in the control grid circuit flows through the relay, keeping contacts 4 and 5 closed during transmitter operation. If the signal grid excitation is cut off for any reason, the grid current ceases and the relay is no longer energized; the contacts in the screen circuit open and the screen no longer receives any voltage. Thus, with no screen voltage, the plate current drops to almost zero.

(2) *Relay coil K102B.* Relay coil K102B is placed on the same iron core as section K102A. One end of K102B connects to ground. The other end leads through contacts 15 and 16 of keying relay K-

101 to switch section S103A, which connects to the 6.3-volt regulated supply voltage. Contacts 15 and 16 are closed only when the receiver is being operated and, therefore, coil K102B is energized only when the receiver is operating. Thus, there is some magnetism in the iron core even when the transmitter is not in use, as when the key is up, or when the press-to-talk switch in the microphone is not pressed.

(3) *Relay coils K102A and K102B.* As soon as the key is pressed down, a small signal current starts to flow in the power amplifier grid circuit, causing coil K102A to be energized and contacts 4 and 5 to close. Because coil K102B had already been energized and the iron core magnetized when the key was up, it is possible for the signal current through K102A to be only a very small value to close contacts 4 and 5. Therefore, more rapid keying is allowed since, almost immediately upon key closure, coil K102A has enough energy to close the power amplifier screen grid circuit. If coil K102A had to magnetize the iron core from a point of zero magnetism, there would be an appreciable time lag until the current through K102A became great enough to produce a magnetic field strong enough to close contacts 4 and 5.

(4) *Arc suppression.* When the contacts of relays K101 and K102 open, arcs are formed which create rf disturbances, called *key-clicks,* in addition to damaging the contacts. These arcs can not be eliminated but the length of their duration with each opening of the contact can be shortened considerably by means of a suitable filter or arc suppression circuit. This is the function of capacitors C144 and C145 and resistor R119.

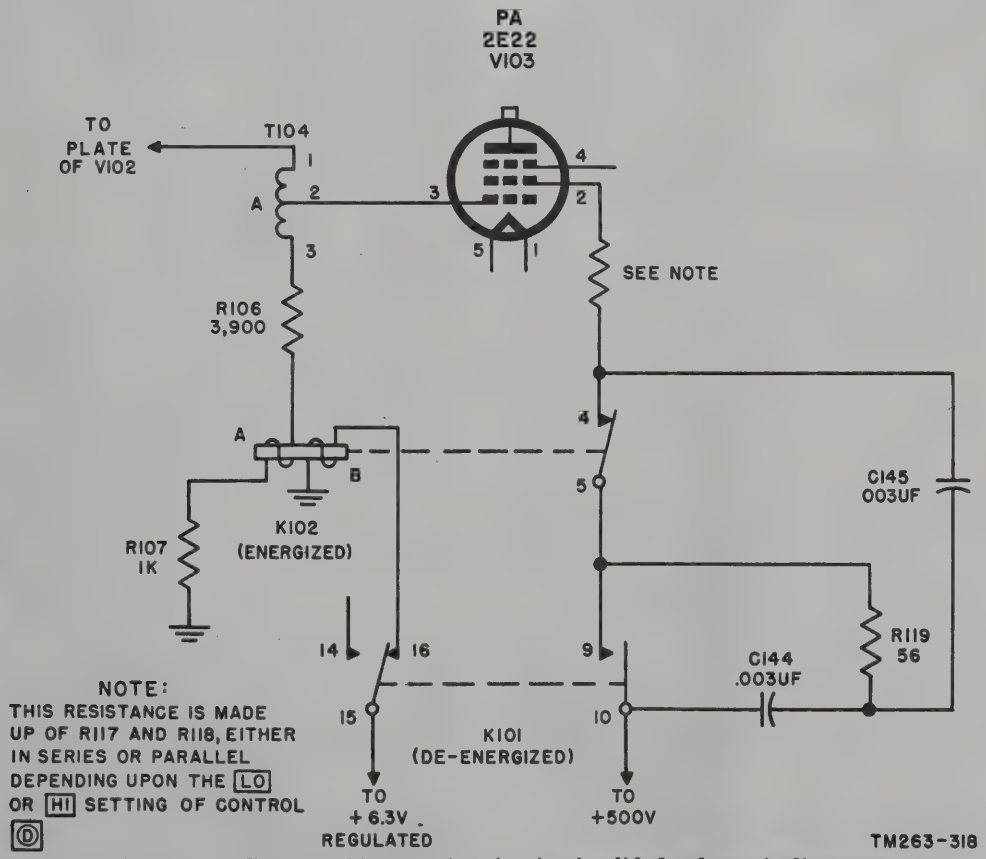

Figure 80. Screen grid protective circuit, simplified schematic diagram.

110. Antenna Circuit (fig. 81)

a. The same antenna can be used for either the transmitter or the receiver. A whip, long-wire, or doublet antenna can be used depending upon vehicular or field operation. Because the three antennas have different impedances, and frequencies between 2 and 12 mc are used, an antenna matching circuit is provided to maintain maximum power transfer from the pa stage to the antenna.

b. ANTENNA TUNING control © resonates the ganged tank circuits of antenna transformer T110A and T110B to the transmitting frequency by means of an adjustable iron core in the transformers. INDICATOR I 101 is a small neon bulb which, by means of its highest brilliance, indicates when ANTENNA TUNING control © has tuned the antenna coils to resonance (TUNE FOR MAX. INDICATOR GLOW). The neon bulb is in series with coil L104 and capacitors C124 and C125. This high-impedance series combination is placed across the primary of either transformer T110A or T110B, depending on the switch position of ANT. SELECTOR switch S102, control Ⓐ (par. 111). The rf voltage across the primary

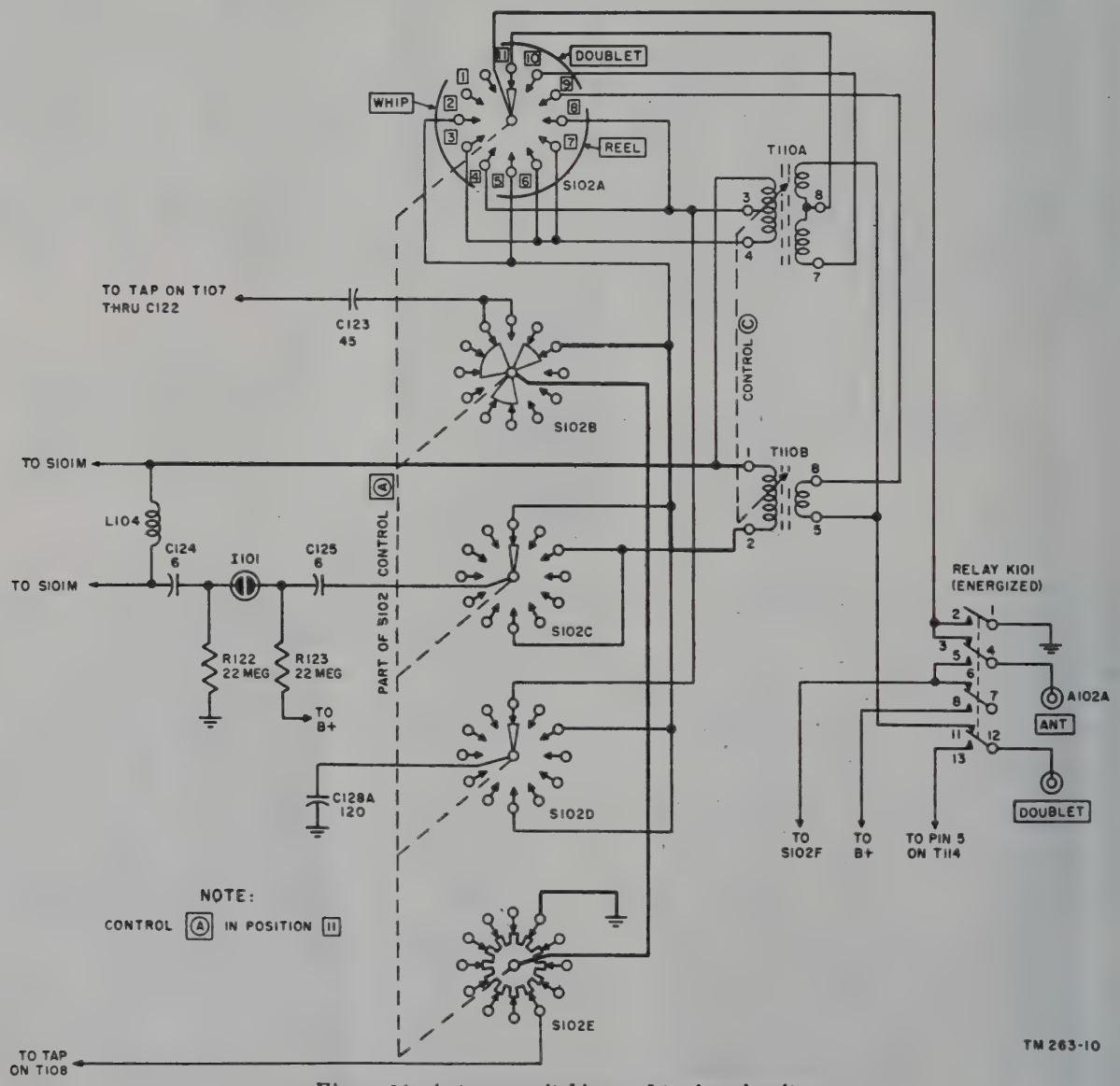

Figure 81. Antenna switching and tuning circuits.

coil is impressed across this series circuit and causes a voltage to appear across the neon indicator. The indicator glows at brilliance which is roughly proportional to the rf voltage across the primary coil, and is therefore an indication of how closely the transformer is tuned to resonance. Resistors R122 and R123 are in series with the neon indicator bulb and this series combination is placed across the 500-volt dc line, when contacts 9 and 10 of relay K101 close. This arrangement is necessary to provide a breakdown voltage so that the neon tube will be ready to light as soon as enough rf voltage is put across it. The dc is thus like a keep-alive voltage.

111. Antenna Switching and Tuning Circuits for Transmitter

a. There are 11 possible positions for ganged switch bank S102, control Ⓐ. Only switch sections A through E enter into transmitter operation. Section F is for receiver operation only. These 11 different positions are necessary so that the antenna will be matched to the power amplifier output coil for maximum power transfer throughout the entire frequency range of the transmitter.

(1) Positions 1, 2, 3, and 4 (fig. 82) match the power amplifier coil to a vertical mast or whip antenna for all frequencies.

(2) Positions 5, 6, 7, and 8 (fig. 83) match the power amplifier coil to an end-fed antenna for all frequencies.

(3) Positions 9, 10, and 11 (fig. 84) match the power amplifier coil to a center-fed or doublet antenna for all frequencies.

b. The whip or long-wire antenna when connected to the ANT. post can be considered as an impedance to ground.

(2) In position 1 (fig. 82) only, loading coil L102 is added to the series combination.

(2) For positions 1 through 8 of control Ⓐ (figs. 82 and 83), the antenna is in series with the primary of either transformer T110A or T110B and this series circuit is in parallel with a portion of coil T107.

(3) In positions 6, 7, and 8 (fig. 83), additional capacity is placed in parallel with the antenna by means of capacitor C128A, C128B, or C128C.

c. For the doublet circuit, positions 9, 10, and 11 (fig. 84), the primary of transformer T110A or T110B is completed to ground through capacitor C128A.

112. Modulator

a. General. The modulator stage uses V105, tube type 3A4, to develop the af voltage to suppressor-grid modulate the pa stage. During am operation, V105 is a straight af amplifier but on mcw and cw operation, the tube becomes an af oscillator. During mcw operation, V105 modulates the pa and, at the same time, sends the tone as a sidetone signal to the receiver for monitoring purposes. During cw operation, V105 does not modulate the pa stage but furnishers the tone as the sidetone signal to the receiver.

b. Microphone Circuit (fig. 85). The af variations are fed from the mike to matching transformer T112 and then to the control grid of V105 to complete the signal circuit. The dc filament supply of the transmitter furnishes the proper excitation voltage for the mike. The mike current (dc) flows through the carbon granules of the mike, terminals 1 and 2 of the primary of T112, through current limiting resistor R111, and to the positive terminal of the filament supply to complete the dc excitation path of the mike. Capacitor CA336, located inside the mike, is a filter to bypass any disturbances set between the carbon granules. Capacitor C135 is a filter capacitor which is used to lessen microphone hiss. Capacitor C132 is a bypass to prevent interference from entering the filament supply.

c. Am Operation (fig. 85). The audio variations fed to the control grid are amplified and appear across the modulation transformer T-113. The suppressor grid of the pa stage is connected in series of the secondary of T113 and biased by the negative voltage developed by the control grid current flowing through K102A and R106 (fig. 76). The modulation voltage, therefore, varies the voltage on the suppressor grid in accordance with the intelligence in the microphone.

(1) The bias used on the modulator control grid, pin 4, is supplied from the pa

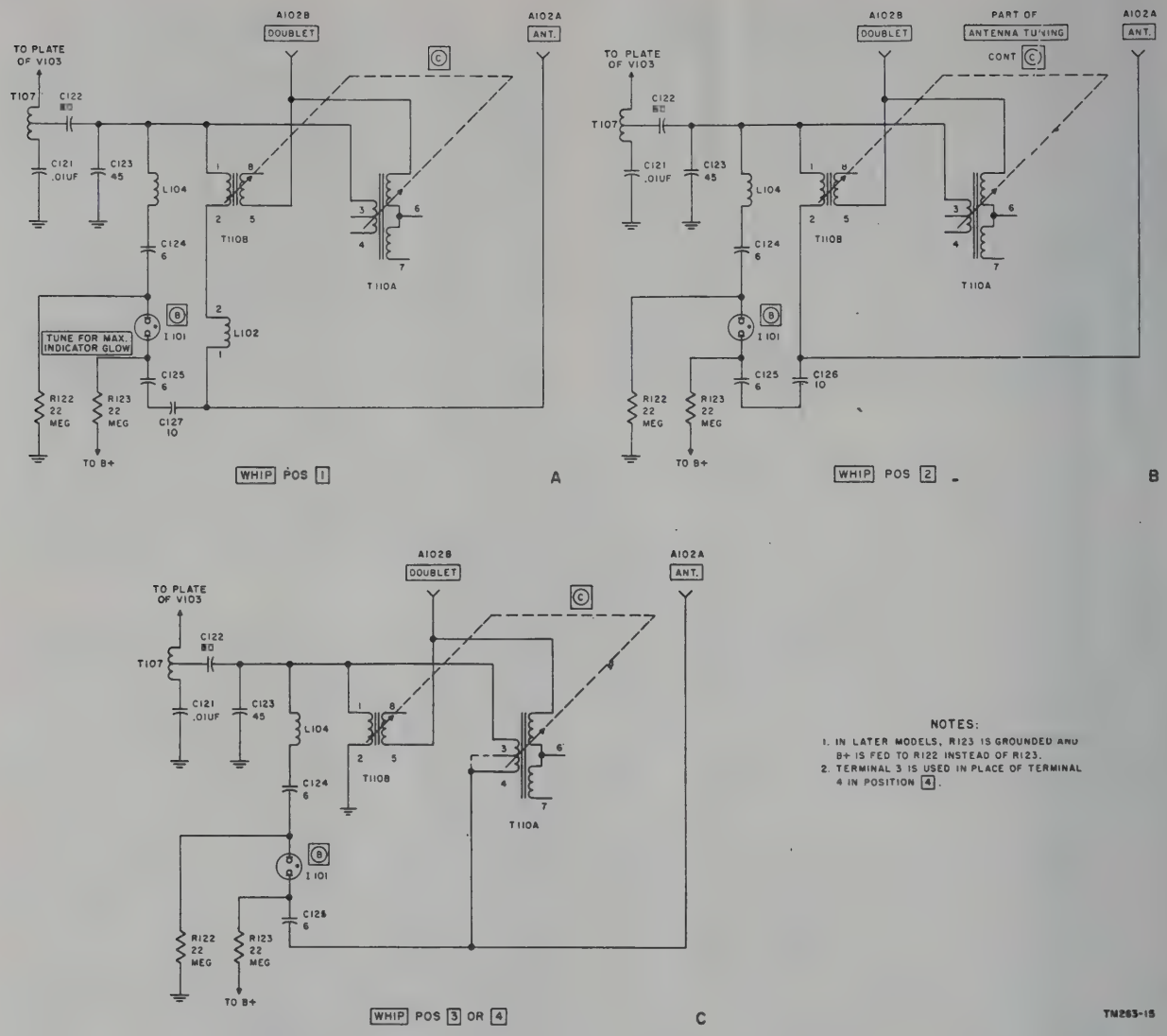

Figure 82. Switch S102, positions 1 through 4.

grid stage. The pa bias circuit is described in paragraph 106*c*. The bias path for V105 starts from ground, through R107, and ends at the control grid. The negative voltage developed by the control grid current of V103 through R107 is the proper operating bias for the control grid of the modulator tube.

(2) The modulator tube receives its plate voltage through decoupling filter choke L103. Capacitor C138 bypasses af variations from T113 to ground. The screen grid receives its voltage from dropping resistor R113 which is bypassed for af by capacitor C137. Modulation transformer T113 couples the af signal from the plate circuit to the pa stage. Resistor R114 prevents a wide variation of impedance across the transformer to help prevent distortion in the modulated amplifier. The sidetone (voice signal) is fed to the receiver through SIDE TONE VOL., control Ⓖ, which is a variable resistor (R115), connected in effect across the secondary of T113.

(3) Refer to paragraph 114*a* for the description of the switching circuit for am operation of control Ⓓ.

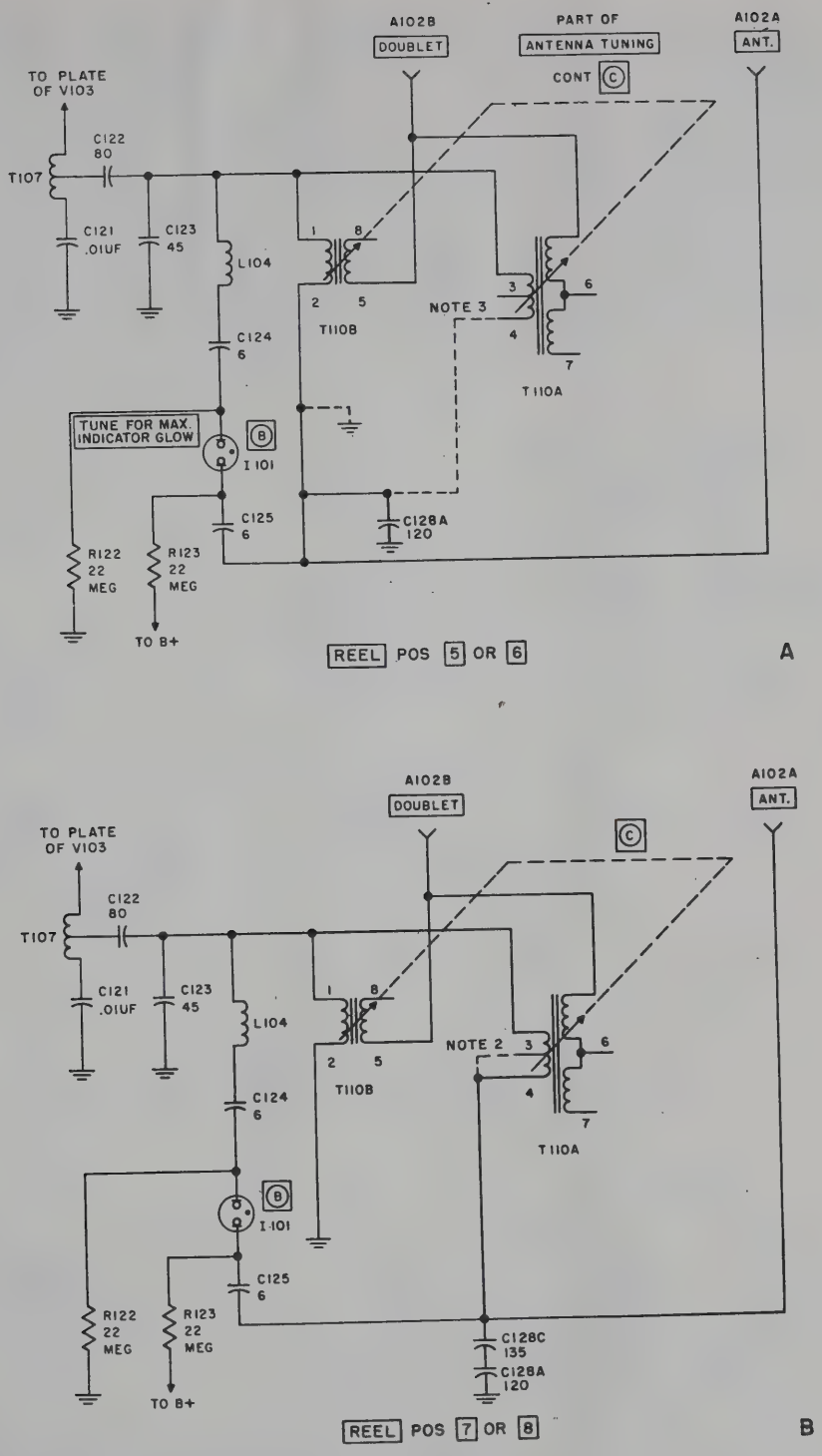

NOTES:

1. IN LATER MODELS, R123 IS GROUNDED AND B+ IS FED TO R122 INSTEAD OF R123.
2. TERMINAL 3 IS USED IN PLACE OF TERMINAL 4 IN POSITION 8
3. TERMINAL 4 ON T110A IS CONNECTED TO TOP OF C128A INSTEAD OF TERMINAL 2 ON T110B AND TERMINAL 2 IS AT GROUND IN POSITION 6

TM263-140

Figure 83. Switch S102, position 5 through 8.

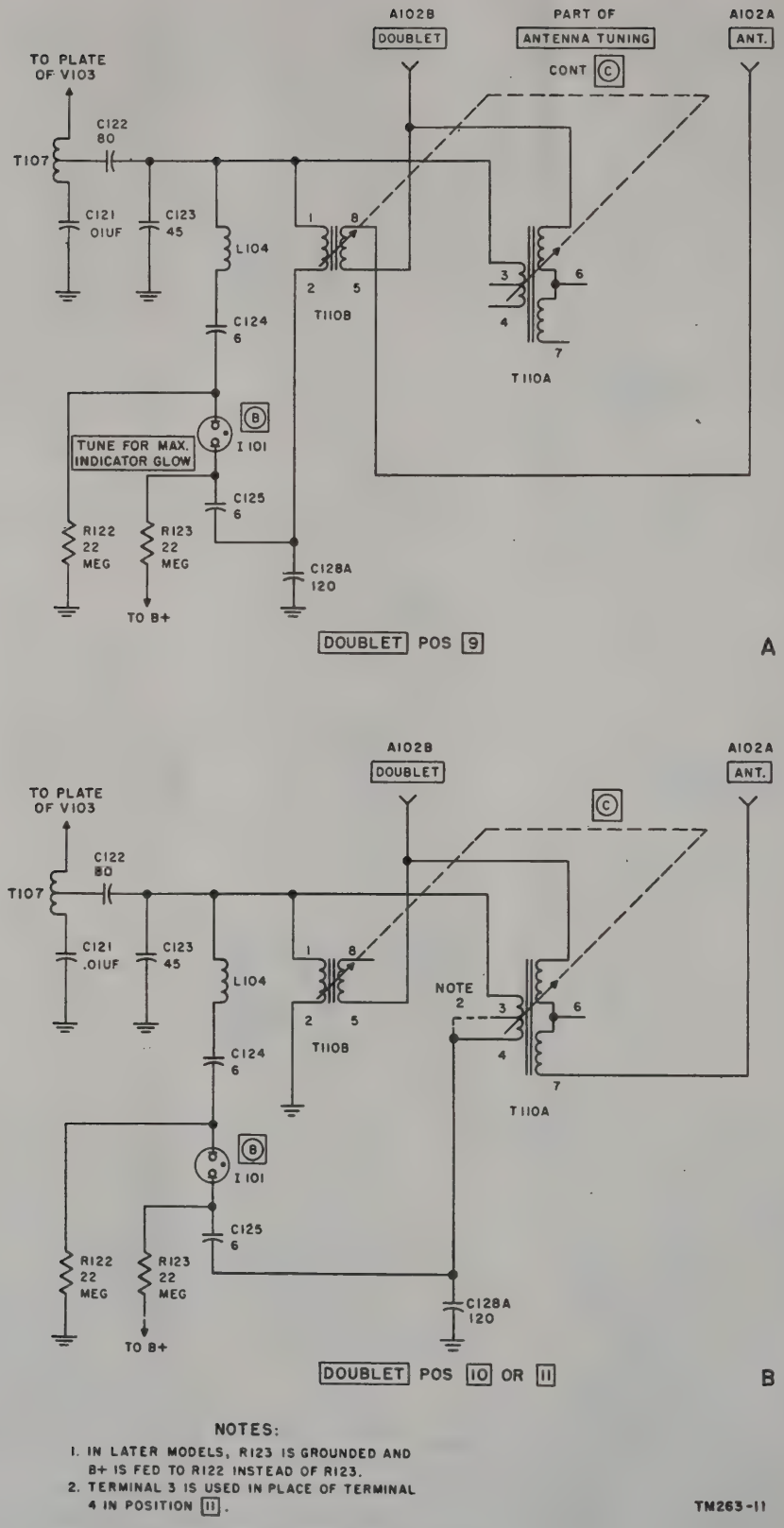

Figure 84. Switch S102, positions 9 through 11.

d. Mcw Operation (fig. 86). During mcw operation, the bias which the modulator tube received from the power amplifier grid circuit is no longer present because the connection is broken by means of a switch (par. 114*b*). Therefore, the modulator tube becomes an audio oscillator because of the positive feedback through capacitors C136 and C143. The tube then develops its own bias across R112 in conjunction with C136 of just the right value to sustain oscillations. Resistor R116 is placed in the circuit across R114 to lower the output of the stage to equalize the af signal potential for either am or mcw operation. Capacitor C140 prevents af harmonics from modulating the pa stage by bypassing them to ground. Choke L103, capacitors C137 and C138, and resistors R113 and R115 perform the same functions as when used in voice operation. No change is made in the connection to the suppressor grid of V103 and, therefore, the transmitter signal is modulated by the audio oscillations of the modulator tube.

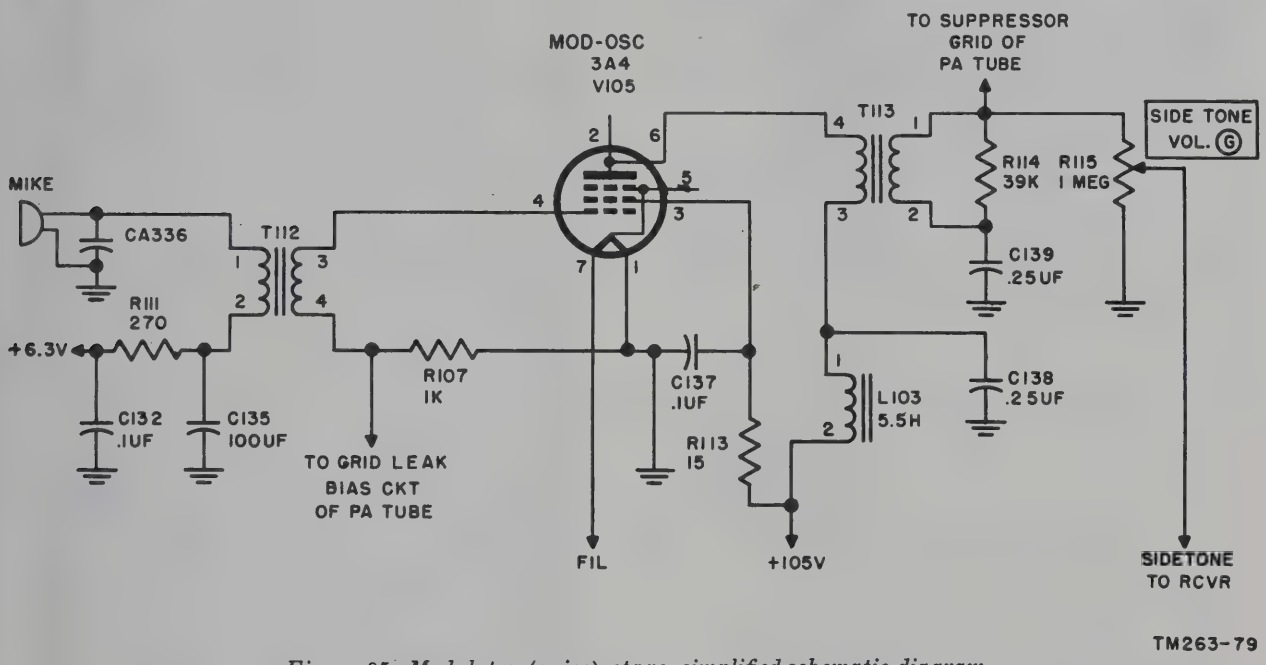

Figure 85. Modulator (voice) stage, simplified schematic diagram.

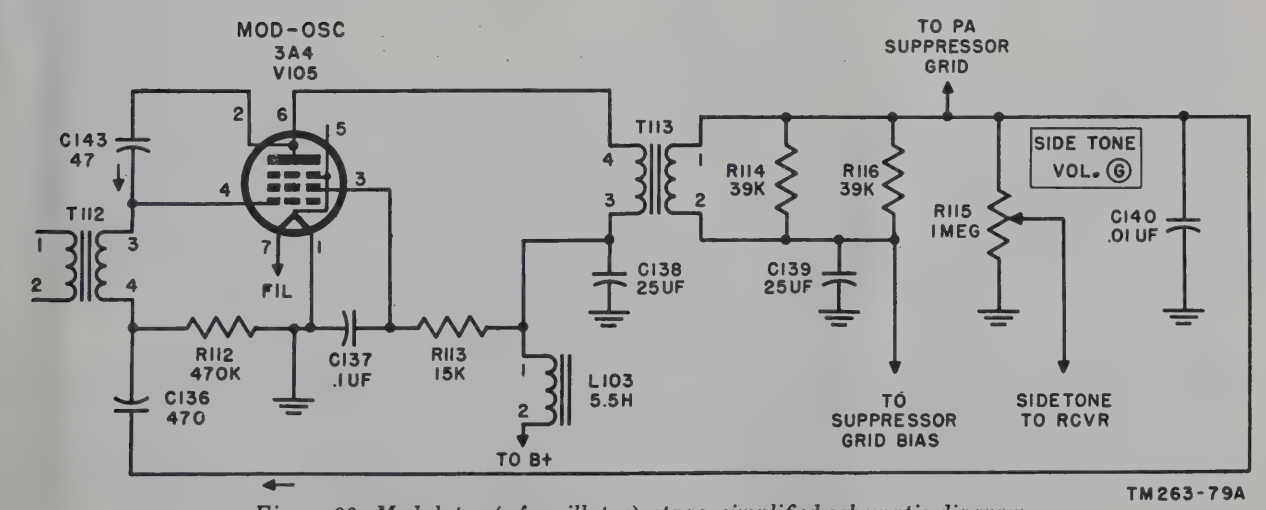

Figure 86. Modulator (af oscillator) stage, simplified schematic diagram.

e. Cw Operation (fig. 86). Modulator tube V105 still operates as an af oscillator during cw operation to furnish sidetone for the receiver. However, during cw operation of the modulator tube, no signal is fed to the pa stage. The switching circuit for cw operation of V105 is described in paragraph 114*c*.

113. Transmitter Sidetone Circuit (fig. 87)

a. A sidetone circuit in the transmitter section permits the operator to monitor transmissions either in the PHONE, CW, or MCW position of control Ⓓ. The sidetone signal is obtained directly from the modulator and therefore does not depend on the rf power transmitted. It is possible to hear a sidetone even though there may be no rf power transmitted.

b. When transmitting cw or mcw, the modulator tube operates as an audio oscillator to furnish the sidetone (par. 112*d* and *e*). A small portion of this power is transmitted to the headset. The keying relay interrupts the plate voltage of the modulator tube, and, at the same time, it interrupts the plate circuit of the master oscillator and the screen circuit of the power amplifier (fig. 91). The relay thus keys the sidetone oscillator in synchronism with the transmitted signals.

c. The sidetone circuit changes that take place when the receiver section control Ⓛ is turned to its operating positions is described below.

(1) In the PHONE and C.W. positions, switch section S3–3 permits the application of screen grid voltage to V105 through terminals 7 and 2 of J3 and J106 and contacts 17 and 18 of relay K101. These positions allow V105 to operate as an amplifier or oscillator in either the PHONE, MCW, or CW position of control Ⓓ (par. 58).

(2) In the NET or CAL. positions, switch section S3–3 opens the screen grid

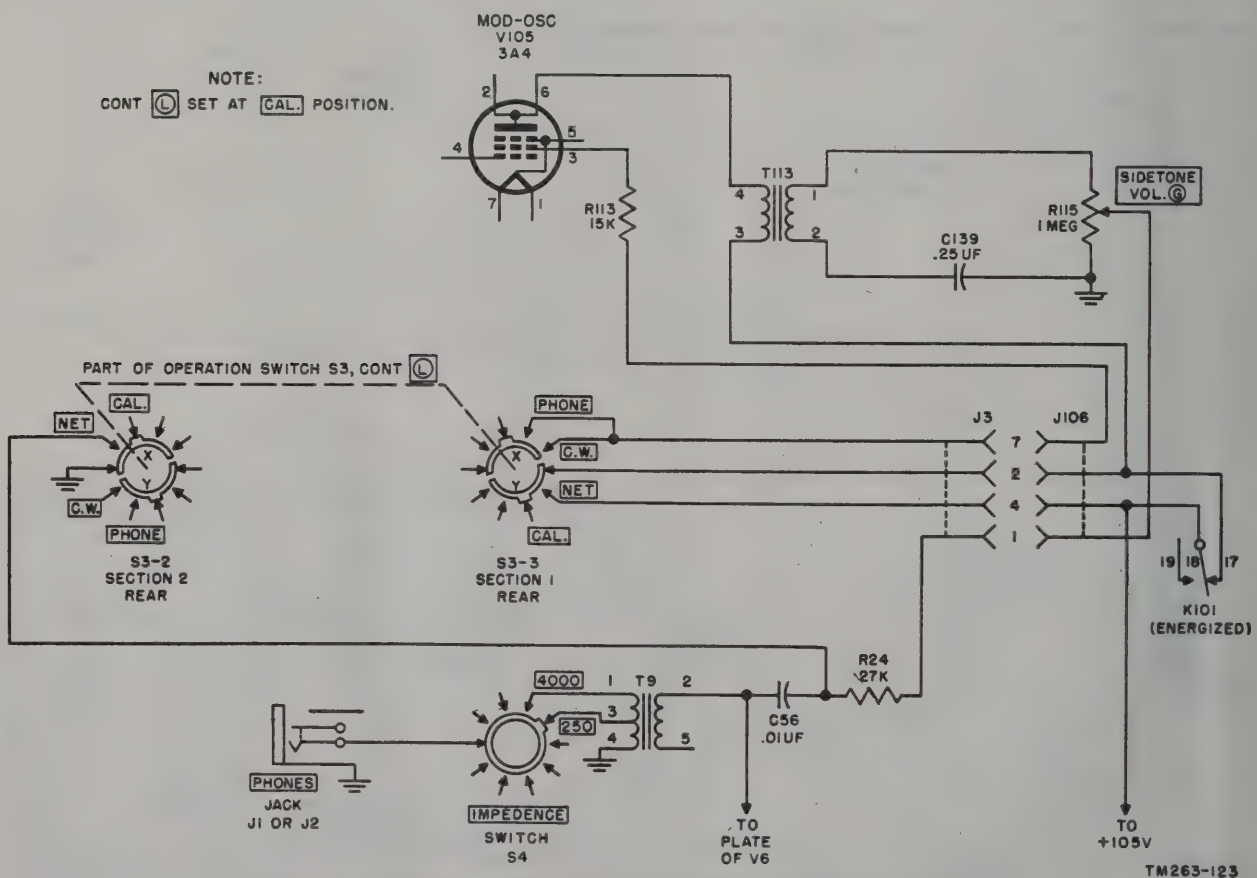

Figure 87. Sidetone switching circuit, simplified schematic diagram.

voltage circuit of V105 to make the tube inoperative in these positions. At the same time, S3–2, placed in the NET position, assures that no sidetone reaches the headset by grounding the junction of C56 and R24. This prevents sidetone from interfering with zero beating of the transmitter to the receiver (pars. 52 and 53).

114. Modulation and Filament Switching Positions of Switch S105 (fig. 88)

Switch sections S105–3 and S105–4, part of control Ⓓ, perform the circuit changes necessary for the modulation positions, PHONE, MCW, and CW. The LO and HI power positions (par. 108) are identical in S105–3 and S105–4. Also, the rotor segments X and Y perform the identical functions in all positions of control Ⓓ to permit turning control Ⓓ in either direction. Switch section S105–4 permits the suppressor grid of V103 to accept modulation from T113 when the control is in the PHONE and MCW positions and to connect it to the filament of V103 on CW position. Switch section S105–3 allows a portion of the bias voltage developed by V103 to be used as bias for V105 and permits the transmitter filament to be turned on when the control is in the PHONE position when contacts 14 and 15 of relay K101 close. In the MCW and CW positions of S105–3, the filaments are not affected by the relay contacts, whether opened or closed. The positions of S105–3 and S105–4 and their functions are given below.

a. PHONE Position.

(1) The suppressor grid (pin 4) of V103 is connected to terminal 1 on T113 through the rotor of S105–4. The suppressor grid is modulated by the af variations fed from V105 to T113.

(2) The filament of V103 (pin 1) is connected to the positive filament line through closed relay contacts 14 and 15 of K101, because S105–3 does not bypass these contacts in the PHONE position. Relay K101 is closed when control Ⓔ is placed in either the SEND or the STANDBY position and either the mike switch or the key is closed. Thus in the PHONE position of control Ⓓ, the transmitter filaments light only when relay K101 is energized.

(3) The control grid of V105 receives its bias through the secondary of T112, the rotor of S105–3, and R107. In this position, R112 is in shunt with R107 but, because of its large size, it has no effect on R107.

b. MCW Position.

(1) The suppressor grid of V103 is connected to T113 in the same manner as in the PHONE position (*a*(1) above). Capacitor C136 is now connected to T112 to provide positive feedback for V105 to work as an af oscillator.

(2) The filament of V103 is connected to the positive filament line through the rotor of S105–3, which bypasses contacts 14 and 15 on K101, and control Ⓔ. Thus in the MCW position of control Ⓓ, the filaments of the transmitter light regardless of the position of relay K101.

(3) The bias of V105 is changed to a grid leak type, because R107 is no longer connected in parallel across R112. The control grid of V105 is returned to ground through the secondary of T112 and R112. Switch section S105–3 opens the circuit between R107 and R112.

c. CW Position.

(1) The suppressor grid of V103 does not require bias in this position, because modulation does not take place and is returned to the plus side of the filament line through S105–4, S105–3, and control Ⓔ. Tube V105 continues to operate as an af oscillator (*b*(1) above).

(2) The filament circuit is identical with that of the MCW position (*b*(2) above).

(3) The control grid circuit of V105 is identical with that of the MCW position (*b*(3) above).

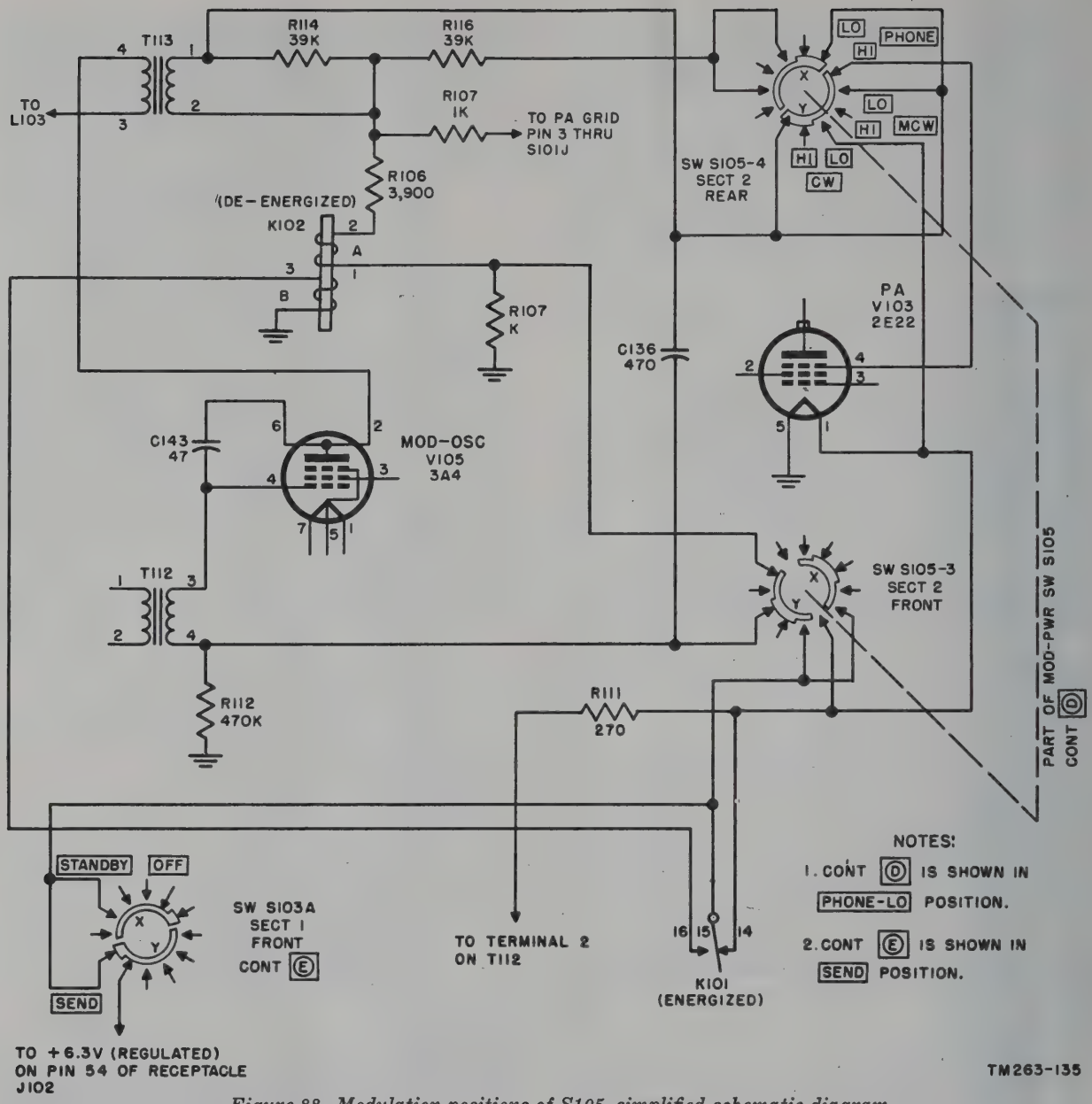

Figure 88. Modulation positions of S105, simplified schematic diagram.

115. Microphone and Key Connections (fig. 89)

a. Both the microphone and the key are arranged so that either may complete the electrical circuit of relay K101. The microphone does so by means of a self-contained push-button switch, while the key acts as its own switch. The current for energizing the relay coil enters the transmitter through pin 45 of receptacle J102. It then flows through switch section S101N to the relay coil and from there to the tip, marked T, on both the microphone and key receptacles. As shown on the diagram, the key, when closed, connects the relay through the sleeve of J105 to ground; this completes the relay circuit. Should the press-to-talk switch on the microphone be pressed instead of the key, the relay circuit would be closed through the internal switch (fig. 167) of the microphone. The relay current flows through the tip on J104 to the white lead in microphone Cord CD–76–A, through the switch to the black

lead connected to the sleeve on Plug PL–68. The sleeve on Plug PL–68 fits into the sleeve on J104, which is directly connected to ground.

b. For the microphone to perform its function, a dc current must flow in its circuit. The current enters the transmitter from pin 54 of receptacle J102 and flows through the SEND position of switch section S103A to contact 15 of relay K101, and switch section S105–3 (fig. 88). If S105 is in the CW or MCW position, the current will reach the microphone regardless of the position of the relay contacts. However, if S105–3 is in the PHONE position, the microphone can be energized only if relay contacts 15 and 14 are closed. From contact 14 of K101 or from the rotor of S105–3, the current goes through current limiting resistor R111 to the primary of T112, and from there to the ring on jack J104. The connection within the microphone is from ring on Plug PL–68, through the red lead to the switch contacts, and to the microphone carbon button. From the button, the current flows to the black lead connected to the sleeve of Plug PL–68, which fits into the sleeve of jack J104 and from there to ground.

c. Because of the high inductance of the relay coil, there is an appreciable time lag before the current through it can increase or decrease. Since this is undesirable for rapid keying, resistor R125 is placed across the coil so that the current through the coil can follow the key variations more closely because of the dampening of the inductance effect by R125.

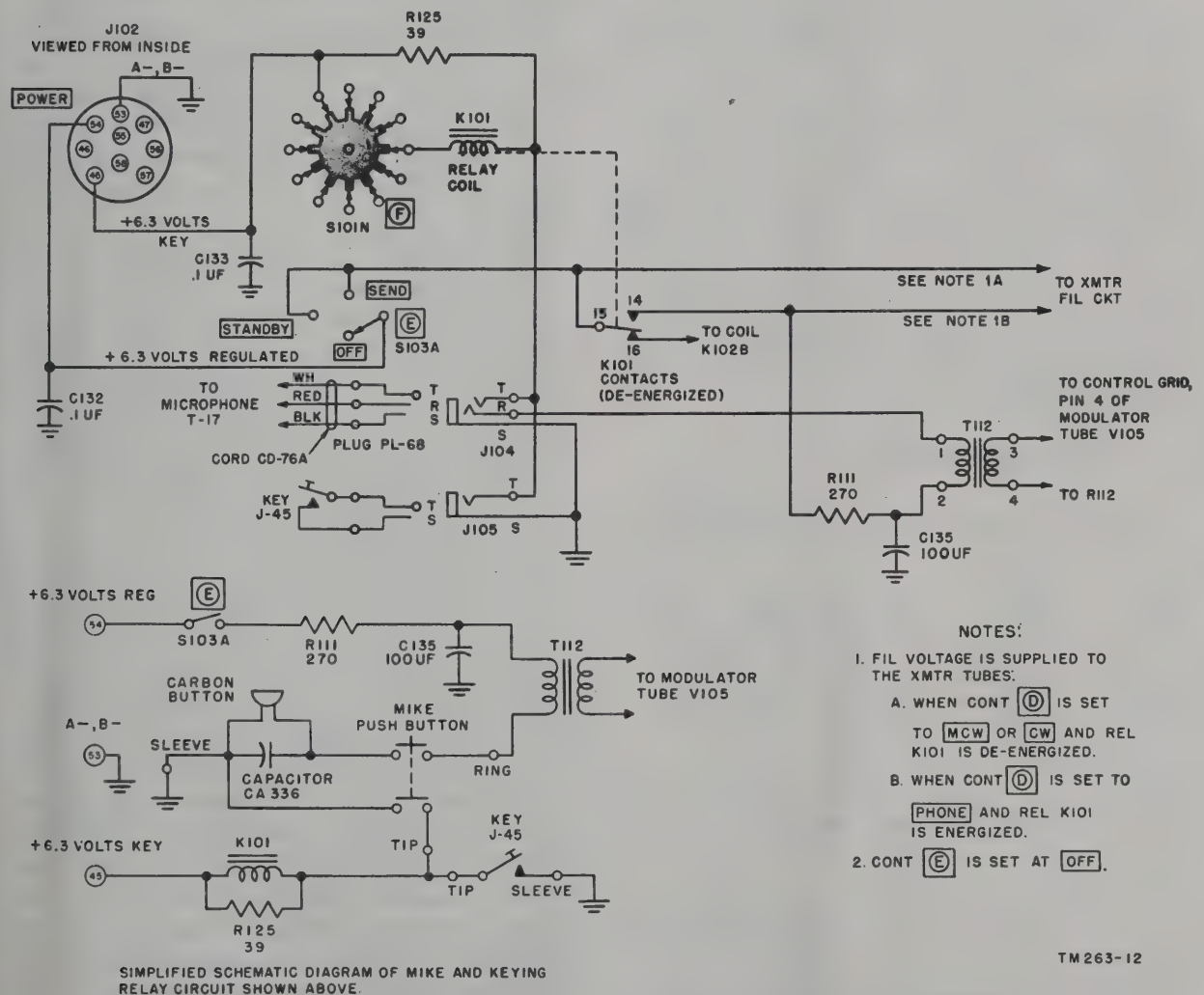

Figure 89. Microphone and key connections.

116. Transmitter Filament Circuit (fig. 90)

a. Tubes V101, V102, and V105 are operated in parallel and require a voltage of 3.6 volts. Resistor R110 is used to drop the 6.3-volt input to the transmitter filament circuit to the required 3.6 volts for these tubes. Selenium rectifier CR101 is used as a voltage regulator to keep the filament voltage on tubes V101, V102, and V105 at 3.6 volts. Pa tube V103 takes the full input voltage for its filaments. Resistor R109 drops the input voltage to 2 volts to energize dial light I 102. Capacitor C132 is a bypass capacitor to keep rf out of the power supply. The dial light may be turned on by means of push-button switch S104, control Ⓙ, which normally is held open by a spring.

b. The transmitter filaments receive their voltage from pin 54 of receptacle J102 (fig. 89). The regulated 6.3-volt supply is fed to switch section S103A, control Ⓔ, and from there to S105–3, control Ⓓ, and also to contact 15 of keying relay K101. When control Ⓓ is in the PHONE position (fig. 88), the tubes and the dial light can receive filament voltage only if contacts 15 and 14 of K101 close (fig. 92); which they do only when the key or microphone button is pressed. When control Ⓓ is in the MCW and CW positions, the filaments receive voltage regardless of the position of the relay contacts (fig. 88).

117. Transmitter Plate and Screen Circuits (fig. 91)

a. General. All of the transmitter plate and screen voltages may be obtained from any power supply except Battery BA–48, depending on which power supply is connected by Cord CD–1086. When Generator GN–58–(*) and Battery BA–48 are in combination, the battery supplies the power for the exciter stages, V101, and V102, while the generator power supply furnishes the high voltage for pa tube V103. This is the only time the transmitter can be operated with control Ⓔ in the STANDBY position. The battery is connected to the transmitter by connecting Cord CD–1119 to BATTERY receptacle J103 which, in turn, is connected to POWER receptacle J102 (fig. 94). Voltages from the vibrator or dynamotor power supplies are connected directly to J102 by Cord CD–1086; these units supply power only when control Ⓔ is turned to the SEND position.

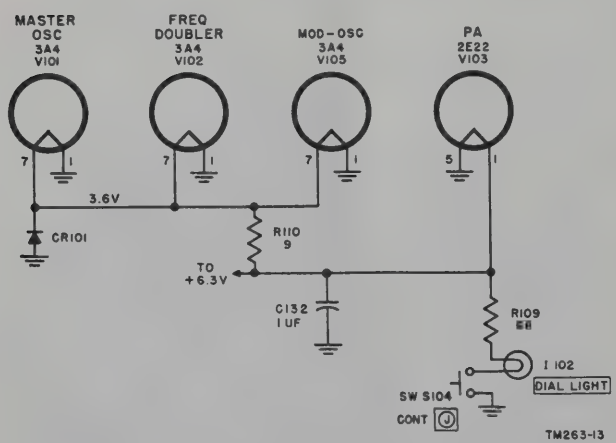

Figure 90. Transmitter filaments, simplified schematic diagram.

b. High-voltage Circuit. Terminal 47 on J102 supplies a 500-volt dc plate voltage for pa tube V103. The plate of V103 is connected by T107 and R108 (meter shunt resistor) to pin 47 of J102. Thus, the moment the power supply is turned on, the pa plate becomes energized.

c. Lv Circuit. The 105-volt output of any power supply except Battery BA–48 enters the transmitter through terminal 57 of J102 and is fed to the SEND position on switch section S103D, control Ⓔ. When control Ⓔ is placed on SEND, the voltage is fed to pins 3 and 5 of V104 (voltage regulator tube) and reaches the contacts of keying relay K101, through the internal connection between pins 3 and 7 of V104. When contacts 17 and 18 and contacts 9 and 10 of relay K101 are open, none of the plates or screens of the tubes receive voltage, except the plate of V103 (*b* above). If the key or press-to-talk switch on the microphone is pressed, these contacts close; all tubes receive voltage, and the transmitter is in operation. When Battery BA–48 is used in conjunction with the generator power supply, the 90-volt input is connected to terminal B on J103 which, in turn, is connected to pin 58 of J102. Pin 58 also connects to pin 33 of generator power supply receptacle 240 which ends in an open circuit (fig. 169). The voltage is then fed to the STANDBY position on control Ⓔ. With control Ⓔ placed at STANDBY, the operation

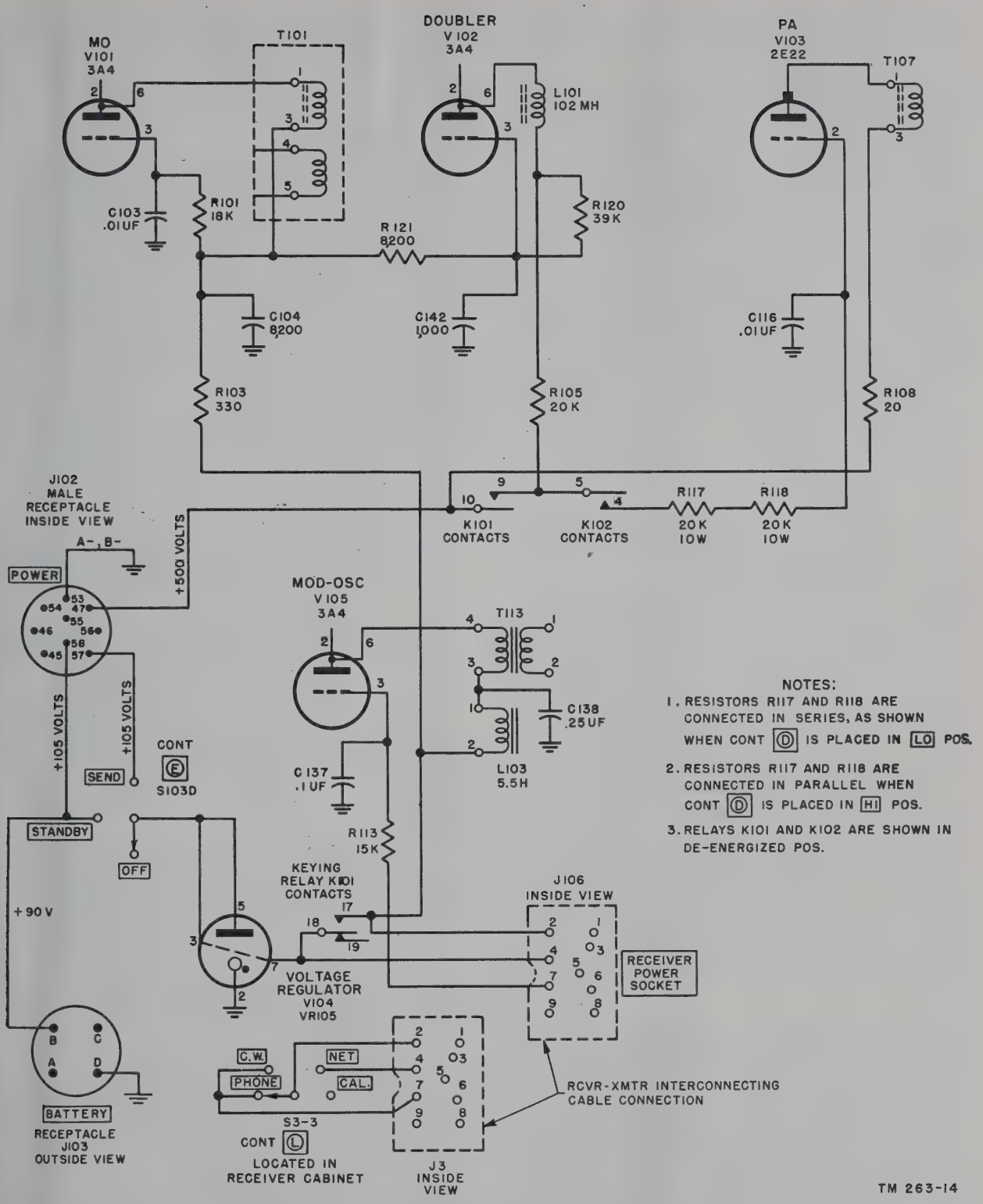

Figure 91. Transmitter plate and screen circuits.

of the lv circuit is the same as that given above for the SEND position.

d. Voltage Regulator Tube V104. This tube is a gas-filled diode which draws just enough current through it so that the voltage drop across either resistor 229 in Generator GN–58–(*) (fig. 168), resistors 721–1 and 721–2 in Vibrator Power Supply PE–237 (fig. 98), R212 in Dynamotor-Power Supply DY–88/GRC–9 (fig. 103), or R5 and R6 in Dynamotor-Power Supply DY–105/GRC–9X (fig. 106) will just compensate for any rise or fall of voltage in the power supply. Thus, the plate and screen voltages of the master oscillator and modulator tubes are regulated, as are the plate and screen voltages to the receiving tubes, during receiver operation.

118. Net Operation (fig. 91)

a. To tune the transmitter to the net frequency, it is necessary first to tune the receiver to the net frequency and then to tune transmitter control Ⓘ to zero-beat with the incoming net signal in the receiver (par. 59). If the full power of the transmitter is used, it will block out the net signal making it impossible to zero-beat. Therefore, the key or microphone button should not be pressed during the tuning of the transmitter for *net* operation. However, if the key or microphone button is not pressed, relay K101 contacts 17 and 18 will not be closed and the transmitter tubes will not receive plate and screen voltages. To overcome this, only oscillator tube V101 and doubler tube V102 are fed with enough operating plate and screen grid voltages. This is accomplished by receiver control Ⓛ, which is connected to the transmitter by the receiver-transmitter interconnecting cable.

b. When operation switch S3–3, control Ⓛ, is turned to NET (fig. 67), it shorts out contacts 17 and 18 of relay K101 (par. 95*c*). This allows the combined plate and screen grid currents of the doubler and oscillator tubes to flow through resistor R103 and switch section S103D to terminal 57 of receptacle J102, and from there, by Cord CD–1086, to the power supply used. Switch section S3–3 (fig. 67) also disconnects the screen grid of modulator tube V105 from the voltage source so that the tube is inoperative. This prevents sidetone from interfering with the zero beating in preparation for *net* operation.

119. Keying Relay K101 (fig. 92)

Keying relay K101 is actuated by either the telegraph key or by the microphone press-to-talk switch. When neither of these devices is pressed, the receiver is in operation, while for transmitter operation, the key or microphone switch must be closed. When the key or microphone switch is closed, the following functions are performed by keying relay K101.

a. The antenna circuit is switched from the receiver to the transmitter.

(1) Contacts 1 and 2 open, disconnecting the ground from switch section S102A.

(2) Contacts 3 and 4 close, connecting terminal A 102A to switch section S102A.

(3) Contacts 6 and 7 close, connecting the receiver antenna-matching transformer T114 (through S102F) to ground.

(4) Connects 11 and 12 close, connecting doublet terminal A102B to transmitter coil T110A.

b. Screen voltage is applied to power amplifier tube V103. Contacts 9 and 10 close, connecting screen voltage-dropping resistors R117 and R118 to terminal 47 of power receptacle J102.

c. When switch section S105–3, control Ⓓ (fig. 88), is in the PHONE position only, the filaments of the transmitter tubes are off, unless the key or press-to-talk switch on the microphone is depressed. Contacts 14 and 15 close, connecting resistor R110 and filament pin 1 of tube V103 (fig. 90) to terminal 54 of receptacle J102, through switch section S103A.

d. Plus 6.3V is fed to the transmitter filaments and to the microphone circuit. Contacts 14 and 15 close, connecting resistor R111 and the transmitter filaments to the 6.3-volt supply entering terminal 54 of receptacle J102.

e. Coil K102B, which is part of overload relay K102, is constantly energized during *receiver* operation. For *transmitter* operation the voltage across the coil is removed. Contacts 15 and 16 open, disconnecting K102B from the

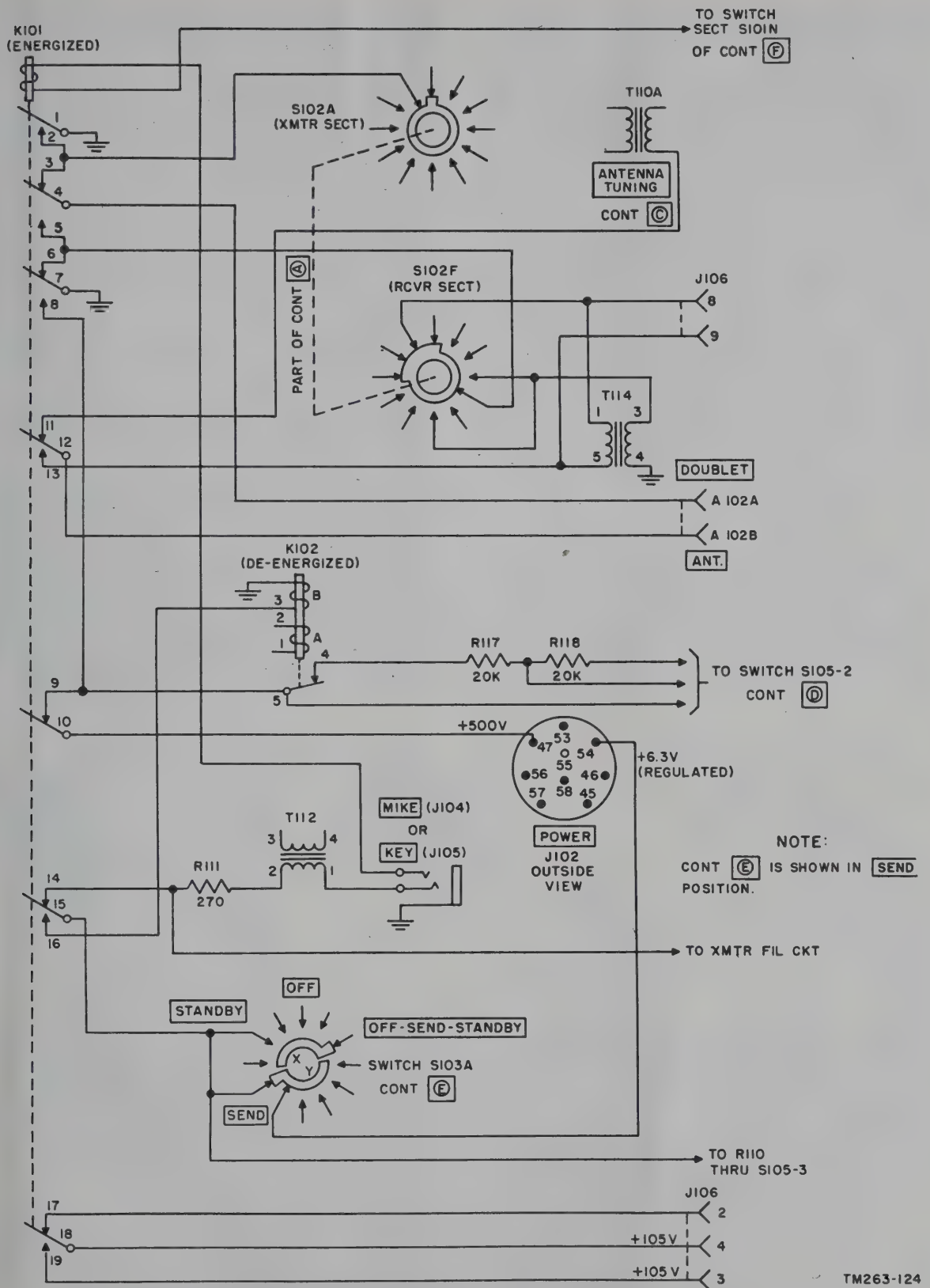

Figure 92. Relay K101 contacts.

6.3-volt supply entering termnial 54 of receptacle J102.

f. Plate and screen voltages are applied to the master oscillator and doubler stages (fig. 91) are controlled by K101. Contacts 17 and 18 close, connecting the plates and screens to the power line through pin 7 of voltage regulator tube V104 (fig. 67).

g. Plate voltages are removed from all receiver tubes except V5 and V6 (fig. 67) and screen voltages are removed from all of the receiver tubes. Contacts 18 and 19 open, disconnecting terminal 3 on receptacle J106 from the power feed line. Plate voltages are not removed from tubes V5 and V6 because of the higher currents they carry which, if allowed to flow through the contacts of the relay, would pit and burn the contacts when they are opened.

120. Meter Socket Circuit (fig. 93)

A metering circuit is used to provide a quick and easy means of tuning (pa plate) and checking the transmitter. Voltages are measured at the control, screen, and suppressor grid of V103 and plates of V101, V103, and V105; plate current is measured only for V103 at meter socket X110. The connections to the meter socket are as follows:

a. Terminal 1 is connected to the positive filament side of V103.

b. Terminal 2 is connected to the lower end of meter shunt resistor R108.

c. Termnial 3 is connected to the screen grid of V103.

d. Terminal 4 is connected to the suppressor grid of V103.

e. Terminal 5 is connected to the control grid of V103.

f. Terminal 6 is connected to the plates of V101 and V105.

g. Terminal 7 is connected to ground.

h. Terminal 8 is connected to the upper end of R108 and the plate of V103.

121. Receiver-Transmitter Interconnecting Cable

This cable is used to connect the receiver receptacle J3 to the transmitter RECEIVER POWER SOCKET J106. Section B, figure 54 shows the receptacles and the color-coded wiring diagram. The functions of the receiver-transmitter interconnections are shown in figure 176 and described in *a* through *g* below.

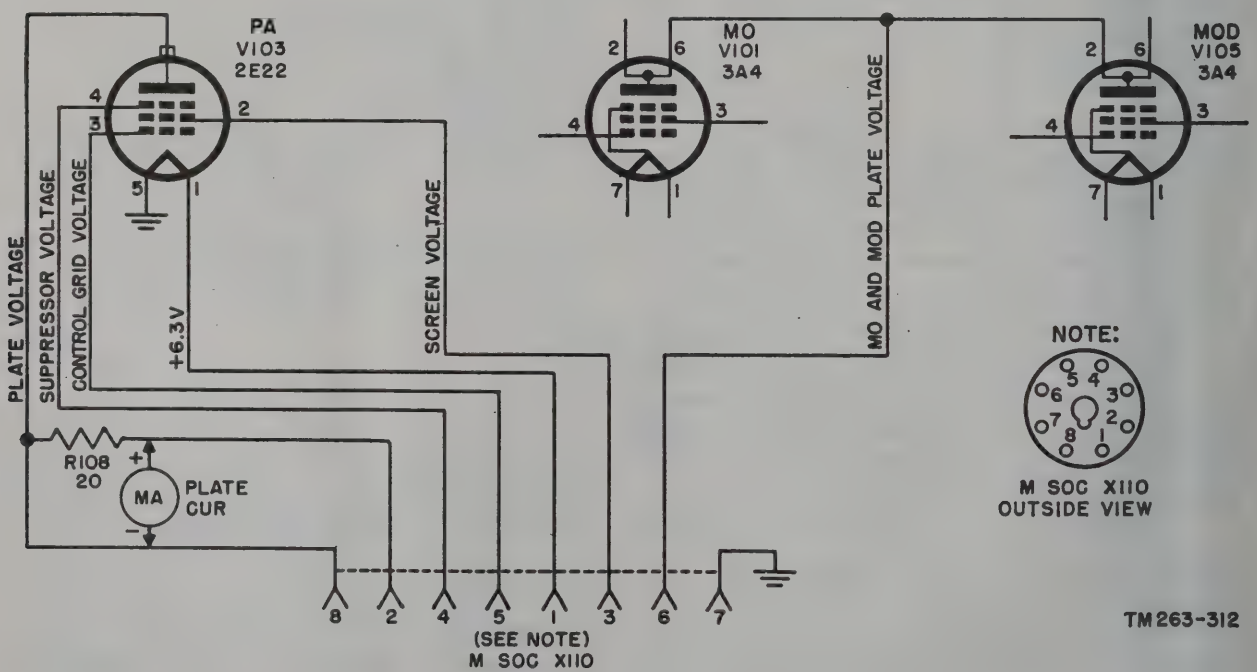

Figure 93. Meter socket X110 connections.

a. Pins 1 connect the sidetone signal between the receiver and transmitter sections (figs. 65 and 87).

b. Pins 2 connect the receiver and transmitter sections to permit the net operational procedure (figs. 67 and 87).

c. Pins 3 and 4 connect the receiver plate and screen voltages from regulator tube V104 (fig. 67).

d. Pins 5 provide a common ground circuit between the receiver and transmitter (fig. 67).

e. Pins 6 connect control Ⓔ on the trans-

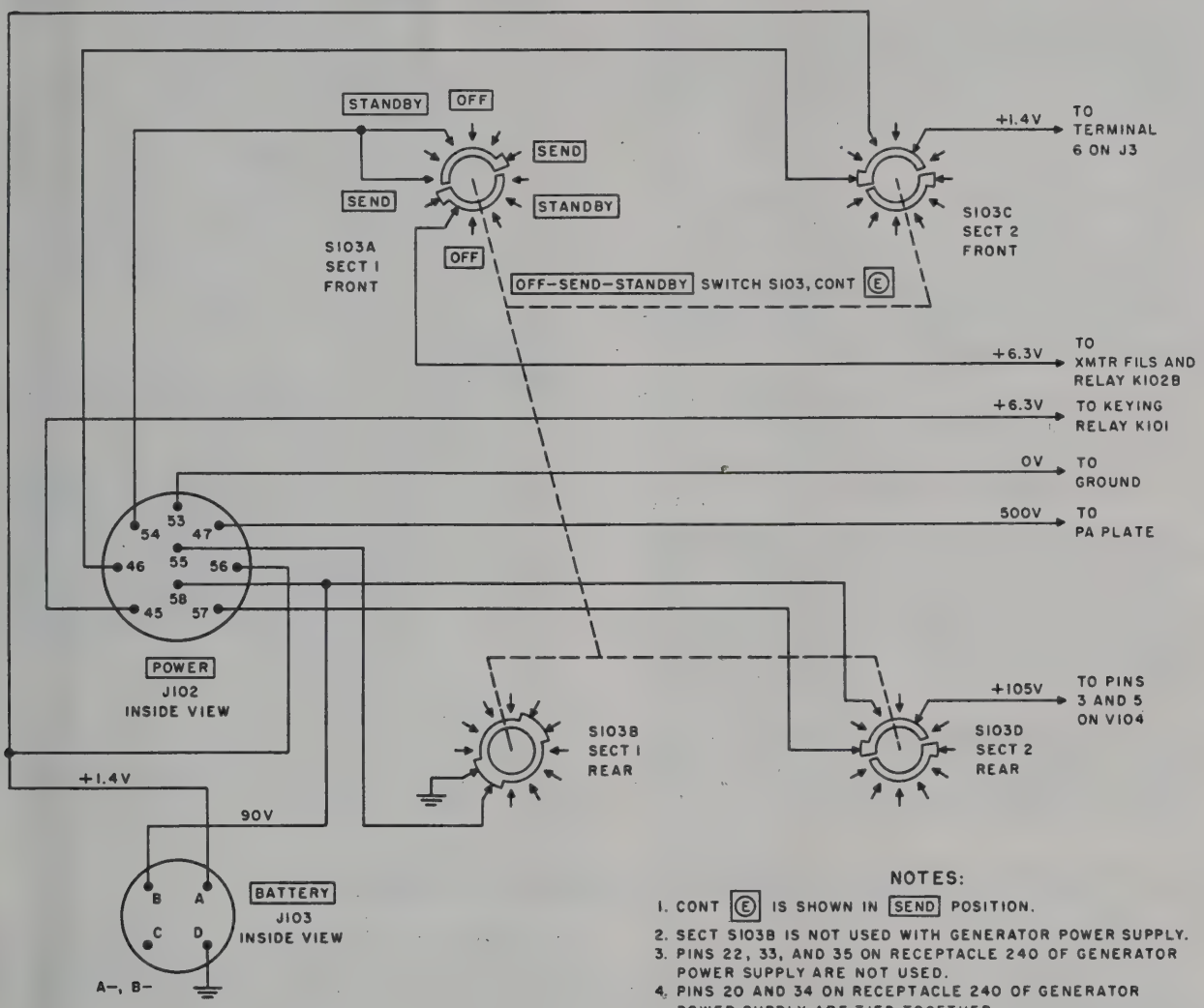

NOTES:

1. CONT Ⓔ IS SHOWN IN SEND POSITION.
2. SECT S103B IS NOT USED WITH GENERATOR POWER SUPPLY.
3. PINS 22, 33, AND 35 ON RECEPTACLE 240 OF GENERATOR POWER SUPPLY ARE NOT USED.
4. PINS 20 AND 34 ON RECEPTACLE 240 OF GENERATOR POWER SUPPLY ARE TIED TOGETHER.

GEN PWR RECP	VIBRATOR, AC, OR DYNM PWR RECP		XMTR RECP J102
PIN	PIN		PIN
20	20	CONNECTS TO	54
21	21	" "	57
NOTE 3	22	" "	56
23	23	" "	46
24	24	" "	53
32	32	" "	47
NOTE 3	33	" "	58
34	34	" "	45
NOTE 3	35	" "	55

LEGEND:

NOMENCLATURE	RECP REF NO.
GENERATOR GN-58-(*)	240
VIBRATOR POWER SUPPLY PE-237	734
DYNAMOTOR-POWER SUPPLY DY-88/GRC-9	J202
DYNAMOTOR-POWER SUPPLY DY-105/GRC-9X	J2
POWER SUPPLY PP-327/GRC-9Y OR PP-327A/GRC-9Y	J1

TM263-305

Figure 94. OFF-SEND-STANDBY switch, control Ⓔ.

mitter to the PHONES jacks, used as a filament switch (fig. 66), on the receiver.

f. Pins 7 permit the screen voltage to be applied to transmitter tube V105 when receiver control Ⓛ is in the PHONE, MCW, or C.W. position (fig. 65).

g. Pins 8 and 9, controlled by keying relay K101 (figs. 81 and 92) and ANT. SELECTOR switch S102, control Ⓐ (figs. 56 and 81), connect the antennas to either the receiver or to the transmitter.

122. OFF-SEND-STANDBY Switch S103 (fig. 94)

Switch S103, control Ⓔ, is the master switch of the radio set. The four sections of control Ⓔ are described below.

a. Switch section S103A permits the transmitter filament voltage to be applied from pin 54 on J102 when it is set to either the SEND or the STANDBY position.

b. Switch section S103B turns on the heavy-duty sections of the ac, vibrator (par. 135), and the dynamotor (par. 152*d* and 159*b*) power supplies. This is done when pin 55 on J102 is connected to ground in the SEND position only of S103B.

c. Switch section S103C allows the receiver filament voltage to be applied during SEND and STANDBY positions.

(1) The STANDBY position of S103C functions as follows:

(*a*) When using the battery power supply the switch connects terminal A on J103 to the filament circuit.

(*b*) When either the vibrator, ac, or the dynamotor power supply is used, the switch connects pin 56 on J102 to the filament circuit.

Note. The generator power supply cannot supply +1.4 volts in this position.

(2) The SEND position of S103C turns on the receiver filaments when either the generator, ac, vibrator, or the dynamotor power supply is used by connecting pin 46 on J102 to the receiver filament circuit.

d. Switch section S103D permits the low voltage supply (+105 volts) to be applied.

(1) The STANDBY position of S103D functions as follows:

(*a*) When the battery supply is used, the switch connects terminal B on J103 to voltage regulator tube V104.

(*b*) When either the vibrator, ac, or the dynamotor power supply is used, the switch connects pin 58 to V104.

Note. The generator power supply cannot supply +105 volts in this position.

(2) The SEND position allows the low voltage to be applied to V104 from any of the power supplies used except Battery BA–48.

Section III. THEORY OF GENERATOR POWER SUPPLY

123. General

a. Generator GN–58–(*) is a hand-driven machine with its armature rotated through a step-up gear train from the cranks (fig. 33). The output of the armature section of the generator power supply consists of two independent voltages which are regulated by a voltage regulator. Both voltages are filtered to eliminate commutator ripple and rf interference. Generator GN–58–(*) is a two-pole machine which has two series-connected field coils and two separate windings on the armature. The armature consists of a 6-volt winding connected to a lv commutator and 425-volt winding connected to a hv commutator. A 1.4-volt tap is taken from the 6.3-volt filter section and a 105-volt tap is taken from the 425-volt filter section to furnish the other operating voltages for the receiver-transmitter.

b. When control Ⓔ on the transmitter is placed at SEND, the generator power supply furnishes the necessary voltages for either receiving or transmitting by the radio set. When control Ⓔ is placed at STANDBY, the generator power supply cannot power the receiver and can only furnish power for part of the transmitter. Thus in the STANDBY position, Battery BA–48 must be used in conjunction with the generator power supply to operate both the receiver and transmitter. For receiving or

transmitting, the generator power supply has to be hand cranked. In transmitting, the key contacts or microphone button must be closed as well as hand cranking the generator power supply.

124. Hv Circuit of Generator Power Supply (fig. 170)

a. In a dc generator, the output is not a pure constant direct voltage because the magnetic field set up by the field poles (field coils 237–1 and 237–2) is not uniform. The magnitude of the voltage induced in the armature coils depends on the speed of rotation of the armature and the strength of the magnetic field. The magnetic field is not of the same strength at all points around the armature; therefore the voltage output of the armature will have a ripple in it instead of a smooth constant value. This commutator ripple is smoothed out by a filter circuit consisting of choke coils 228–1 and 228–2 and capacitors 233–1 and 233–2. The filter also serves another purpose. The sparks under the brushes, which rest on the commutator, cause rf interference. The filter removes this interference from the power leads by bypassing the rf to ground through the capacitors.

b. Because power amplifier tube V103 requires about 500 volts on the plate, while the other tubes require only about 105 volts, part of the hv output of the generator power supply is dropped down to 105 volts by resistor 229. The actual current through resistor 229 required to cause the voltage drop is drawn not only by the tubes, but by voltage regulator tube V104. This tube *always* takes just enough current through it to make the voltage drop across resistor 229 of the correct value which, when subtracted from the generator power supply voltage, will leave exactly 105 volts. This 105 volts is connected to terminal 21 on terminal board 239. If the voltage at the terminal board end of resistor 229 is measured without the voltage regulator tube in its socket, the reading will be the full commutator voltage because no current will pass through resistor 229 to cause a voltage drop across it.

c. Cord CD–1086 (A, fig. 54) connects generator power supply receptacle 240 to the transmitter POWER receptacle J102. The relationship of the pins between the receptacles is given in the table, figure 94. As shown on this figure, pin 47 permits the high voltage to be applied to the plate of V103. Pin 53 on S102 completes the high voltage circuit (B—) to ground. Note that control Ⓔ has no affect on the high voltage circuit of the generator power supply and high voltage will be present on V103 regardless of the setting of the OFF-SEND-STANDBY switch when the generator power supply is operated.

d. In the SEND position of control Ⓔ (fig. 94), the +105 volts is fed from pin 57 on J102, through switch section S103D, to VR104, and then to the plates and screens of all of the tubes in the receiver-transmitter except pa tube V103 (fig. 91). When control Ⓔ is in the STANDBY position, pin 33 on 240 is not connected to anything, therefore low voltage (+105 volts) cannot be fed to the receiver-transmitter. To use the generator power supply when control Ⓔ is in the STANDBY position, Battery BA–48 must be used also.

125. Lv Circuit of Generator Power Supply (fig. 170)

a. The lv winding on the armature supplies power to heat the tube filaments of the radio set, to energize the keying relay, and to operate the microphone circuit. The lv winding also supplies power to operate voltage regulator 224. The voltage regulator acts to keep the output of the generator power supply at a constant voltage.

b. The lv output of the generator power supply is filtered by choke coils 227, 226, and 225 and capacitors 231 and 230. Iron core choke coils 227 and 225 are not adequate for rf suppression, at the very high frequencies created by an arc, an iron core coil may actually act as a capacitor because of the high distributed capacity of such a coil. This distributed capacity may be high enough to allow the very high frequencies to appear in the receiver and distort the received signal. Therefore, air core choke coil 226 is used, since at the high frequencies its stray capacitance will be negligible because of its size, but the inductance will still be large enough to suppress the rf distortion.

c. Iron core choke coil 225, in addition, acts as a voltage-dropping resistor. The flow of

current through the resistance of the winding drops the lv output of the generator power supply to 1.4 volts for the filaments of the receiving tubes. The 6.3 volts necessary for the transmitter filament and microphone circuits and relays K101 and K102 is taken from the junction of chokes 226 and 225.

d. When control Ⓔ (fig. 94) is in the SEND position, the +1.4 volts required for the receiver filaments is taken from pin 46 on J102 and through S103C. When control Ⓔ is in the STANDBY position, the filament voltage is connected to pin 56 on J102 and terminal A on BATTERY receptacle J103 and through S103C. Because pin 22 on receptacle 240 is not connected to anything, the receiver filaments must get their voltage from Battery BA–48 in the STANDBY position. Pins 53 on J102 and D on J103 complete the return circuit (A—) to ground.

e. When control Ⓔ (fig. 94) is in the SEND position, +6.3 volts required for the transmitter filaments and relay K101 is taken from pin 54 on J102 and through S103A. When control Ⓔ is in the STANDBY position, the circuitry is the same as when the control is in the SEND position because the SEND and STANDBY positions on S103A and pins 20 and 34 on 240 are tied together. The difference in circuitry lies in the transmitter as relay K102B (par. 119) is energized for STANDBY and relay K101 is energized for SEND operation. Pin 53 on J102 and terminal D on J103 complete the ground return circuit.

126. Voltage Regulating Circuit of Generator GN–58–A (Late Model) (fig. 170)

a. The generator power supply is a hand-driven device and the voltage output will depend on the speed at which the hand cranks are turned. This is not desirable because the radio set requires a fixed, unvariable voltage supply. A plug-in voltage regulator unit is used which operates to keep the output voltage constant, regardless of the speed of rotation or the amount of load on the generator, within 50 to 70 rpm limits.

b. The regulator performs this function by decreasing the field current when the output voltage rises and by increasing the field current when the voltage output falls. This method of regulation depends on the fact that the output voltage of the generator is proportional to the speed of rotation and the strength of the field. Thus, if the speed of rotation should be raised by too rapid turning of the hand cranks, decreasing the field current would counteract the effect of greater speed. The opposite condition also applies. If the hand cranks are turned too slowly, the voltage output of the generator goes down. A means of raising the voltage is to increase the field current. The following is an explanation of Generator GN–58–A (late model) regulator.

c. In series with the field coils is a multitapped resistor (plaques 1 and 2), the sections of which can be shorted out by the contact fingers of voltage regulator 224. The force that moves these fingers is the magnetic field created by the current flow in the regulator coil. The grounded negative lead of hv armature 235 connects to the positive side of the lv armature 236 through variable resistor 245, the parallel combination of the 7-ohm and negative temperature coefficient resistors, the regulator coil, and pin 13. Thus, as the regulator coil is connected across the lv armature coil, the current through the regulator coil varies with the voltage output of the lv armature.

d. The finger contacts of the regulator are all normally closed so that when the hand cranks are being turned at the correct speed, the field coils receive the correct current to produce the magnetic field necessary for normal voltage output. If the generator power supply is cranked too rapidly the following occurs:

(1) The outputs of the lv and hv armature coils increase.

(2) The current through the regulator coil increases because it is across the lv commutator.

(3) The magnetic field of the regulator coil becomes stronger and is able to attract and open the first two or three contact fingers, depending on the strength of the field.

(4) With the contacts open, the short is removed from the first two or three resistors, marked .2, .4, etc.

(5) There is now added resistance in the field circuit; therefore the field current is reduced slightly.

(6) The reduced field current lowers the field

strength and the lowered field strength results in less output voltage from the generator power supply. Thus, the output voltage returns to the normal operating value.

e. The number of contacts that the regulator coil opens depends on the current in the coil which in turn varies with the output voltage of the lv winding. Therefore, the resistance which is inserted in the field circuit is directly dependent on the output voltage. Controlling the field in this manner regulates the output of both the hv and lv armature coils because both rotate in the same magnetic field.

f. The regulating unit comes into operation only when the hand cranks are rotated above 50 rpm. If the cranks are turned too slowly, the only possible result is the decrease of voltage output from the generator power supply. This can be remedied by a more rapid turning.

g. A negative temperature coefficient resistor is used in the regulator coil circuit. If the temperature of the regulator coil should increase, the resistance of the windings increases, with a resultant decrease in current through the coil. This will affect the output of the generator power supply which is undesirable. Therefore negative temperature coefficient resistor is placed in series with the coil circuit and the characteristics of this device are such that its resistance decreases when the temperature goes up. Thus, since its resistance is lowered, it will allow more current to flow, thereby compensating for the higher resistance of the regulator coil when the temperature increases.

127. Circuit Differences between Generators GN–58 and GN–58–A (Early Models) and GN–58–A (Late Models)

a. Filter Units. The filter units of both the hv and lv armatures are exactly the same in all models except for the changes listed below:

Ref No.	Description		
	Generator GN–58	Generator GN–58–A (early model)	Generator GN–58–A (late model)
225	22 mh	28 mh	28 mh.
226	11 uh	11 uh	12 uh.
227	4 mh	4 mh	3.11 mh or 3.45 mh on some models.

b. Voltage Regulator Units. The voltage regulator units are the same in principle but differ in construction for the different models. Refer to MWO SIG 11–263–6, Modification of Generator GN–58 and Early Models of Generator GN–58–A to provide a plug-in voltage regulator unit.

c. Voltage Regulator of Generator GN–58 (fig. 168). If the lead from the negative terminal of the lv armature is traced through the field coils, it will be seen to pass through resistor 238 and from there directly to the positive brush of the lv armature. Also, the regulator coil is connected across the lv armature through resistor 242 and negative temperature coefficient resistor 232. Therefore, the magnetic field of the regulator coil is directly dependent on the voltage output of the lv winding. This magnetic field acts upon the vibrating contact arm so that it touches either contact A or B. For normal voltage output of the generator power supply, the vibrator arm rests against contact A, and thus shorts out resistor 238. With resistor 238 shorted out, the field coils receive normal current.

(1) If the hand cranks are rotated slightly faster than 50 rpm, the following occurs:

(*a*) The voltage outputs of the armature coils are raised.

(*b*) The field strength of the regulator coil increases since it is connected across the lv armature.

(*c*) The vibrating arm is then pulled away from contact A, and thus connects resistor 238 in series with the field coils.

(*d*) The field strength drops and the voltage output of the generator power supply is then lowered.

(2) It is possible that the hand cranks can be turned so rapidly that damage can be done to the armature because of the high voltage induced. To avoid this possibility, contact B, which is permanently connected to ground, is used as part of the regulator unit. When the hand crank is rotated with excessive speed, the following occurs:

(*a*) The regulator coil develops a very strong magnetic field because of the high armature voltage across it.

(*b*) The field is strong enough to pull the

vibrating contact over so that it touches contact B.

(*c*) As contact B is permanently connected to ground, the field coil of the generator power supply, which is connected to the vibrating contact, is grounded and is no longer energized.

(*d*) Because the field coils are no longer energized, the voltage induced in the armature drops immediately from the harmful high value to practically zero.

(3) The regulator for Generator GN–58 is a vibrating reed rather than a plug-in type, as in Generator GN–58–A (early and late models), and is built up on a bracket screwed to the housing structure.

d. Voltage Regulator of Generator GN–58–A (Early Models) (fig. 169).

(1) On these models, the regulator unit is contained in a small box having an octal base similar to that of a radio tube. This base plugs into an octal socket which is located within the generator power supply housing. In series with the field coils there is a multitapped resistor which is connected between pins 2 and 7 of the octal base. Located above the taps is a series of flexible contacts which are all electrically connected together and rest on the taps of the multitapped resistor, one flexible contact for each tap. Therefore, when the cranks are turned below 50 rpm, the multitapped resistor is completely shorted out by the flexible contact fingers. The regulator coil actuates these flexible contacts. If the positive lead of the lv commutator is traced, it will be found to go through adjustable resistor 245, through the parallel combination of the negative temperature coefficient and 9.5-ohm resistors, and then through the regulator coil to pin 1 and ground. The coil is thus placed across the lv commutator and its magnetic strength is dependent on the lv output of the generator power supply.

(2) If the lv output is too high, the magnetic strength of the coil will be great enough to partially pull up the bar to which the flexible fingers are fastened. The fingers on the ends of the multitapped resistor are raised away from the taps, removing the short across these sections and placing resistance into the field circuit. This cuts down the field current, and thereby reduces the voltage output of the generator power supply. Should the hand cranks be turned more rapidly, more flexible contact fingers would be raised, progressing from the ends to the center of the resistor with each increase in crank speed; this places more resistance in series with the field coils.

e. Negative Temperature Coefficient Resistor. The negative temperature coefficient resistor serves the same purpose as in the other regulator models. Adjustable resistor 245 may be varied for minor adjustments of the output voltage of the generator power supply. Another adjustment is provided. A spring is attached to the mechanism which moves the flexible fingers, and the tension in this spring will determine how many contacts will be raised for a given current through the regulator coil.

f. Regulator Adapter. If the regulator described in *e* above becomes defective, it should be replaced with a regulator of the latest model. This is made possible by means of an adapter plug with an octal socket on one side (fig. 148), and a 14-pin socket on the other side. Located in the adapter unit are the multitapped wire-wound resistor and the resistor that shunts the negative temperature coefficient resistor.

Section IV. THEORY OF VIBRATOR POWER SUPPLY PE–237

128. General

This unit converts a 6-, 12-, or 24-volt dc input from a vehicular storage battery into the necessary operating voltages for the receiver-transmitter. It consists of two major circuits; the heavy-duty (send) and the low-power (standby) sections. The heavy-duty part is used when both the

receiver and transmitter are in use and it is turned on when control Ⓔ is turned to SEND. The standby section is switched on when control Ⓔ is turned to STANDBY. This operation automatically switches off the heavy-duty section. In standby operation, only the receiver is supplied with power, which presents less of a drain on the battery than when the heavy-duty section is used. This is advantageous for prolonged periods of listening.

129. Circuit Breaker
(figs. 171 and 172)

The vehicular battery is connected to the + and — terminals across capacitor 706. Before the current from the vehicular battery passes to either portion of the vibrator power supply, it must first pass through circuit breaker 728. Circuit breaker 728 protects both the battery and Vibrator Power Supply PE–237 from any overload, because it opens the circuit if too much current flows through its magnetic coil. Circuit breaker 728 is also the main ON-OFF switch for the vibrator power supply. When the OFF button is pressed, the contacts are held open by a spring-loaded mechanism, and in order to turn the power supply on, the tension of the spring must be overcome by pressing the ON button. When the current drain on the battery becomes too great the circuit breaker coil releases a small catch which allows the spring to open the contacts, and thus stop the high current flow.

130. Voltage Selector Switches of Vibrator Power Supply
(figs. 171 and 172)

In Vibrator Power Supply PE–237, all triple-pole, triple-contact wafer switches are voltage selector switches. They are all ganged to one common shaft and perform the function of connecting the correct operating voltages to the different circuit components when a 6-, 12-, or 24-volt vehicular battery is used. The switch sections are numbered 735–1 to 735–8. Each wafer section is divided into three separate sections.

131. Standby Section of Vibrator Power Supply
(fig. 95)

a. General. Because the standby section supplies power to the receiver only, it takes less current from the battery than does the heavy-duty part. There is no direct switch to turn on the standby portion, but it operates automatically when the OFF-SEND-STANDBY switch, control Ⓔ, is turned to STANDBY. The receiver filaments receive their voltage through circuit breaker 728, coil of relay 727, and voltage-dropping resistor 719. Thus, when the switch is turned to STANDBY, filament current flows through the relay coil and closes the contacts. With the contacts closed, vibrator VB1 is connected to the vehicular battery and begins operating. The vibrator causes the battery current to flow through the power transformer primary in a manner simulating an alternating current. The voltage across the secondary, which is greatly increased over that of the primary, is then rectified by the vacuum-tube rectifier and filtered for ripple by the filter unit. The high dc voltage is then fed to the plates and screens of the receiving tubes.

b. Detailed Circuit Analysis (fig. 96). Only the standby portion and relays 726 and 727 are shown in figure 96. These relays determine, by the position of their contacts, whether the send or standby section is connected to the battery, and, in this case, the standby section is in operation. If current is made to flow through the coil of relay 726, the contacts would swing toward the coil and the standby section would cease to operate while the send vibrator VB 16 would begin functioning. The numbers and letters shown on the contacts and coils of relays 726 and 727 have been assigned for ease of explanation only and do not appear on the equipment.

(1) Connection 1 of the coil of relay 726 connects to VOLTAGE CHANGE SWITCH section 735–1C, which provides the proper resistance in series with the relay coil to accommodate it to each of the three different battery voltages used. From the switch, the circuit continues to the coil of circuit breaker 728, through its contacts, and from there to the positive terminal of the battery. Thus, when the ON button is pressed, the terminal end of coil 726 is connected to the positive terminal of the battery. For current to flow through the coil, its No. 2 terminal must be con-

nected to the negative terminal of the battery. The No. 2 lead connects to pin 35 of power output receptacle 734. Further, pin 35 connects to pin 55 of J102, the receiver-transmitter receptacle, through Cord CD–1086. As shown in figure 94 pin 55 can be connected to ground only if switch section S103B, which is part of the OFF-SEND-STANDBY control Ⓔ, is turned to SEND. Therefore, unless the control is placed on SEND, the coil of relay 726 is unenergized and out of the standby circuit.

(2) The contacts of relay 726 are shown for this unenergized condition and contacts H and I connect terminal 3 of the coil of relay 727 to the positive terminal of the battery, through the circuit breaker. The bottom side, terminal 4 of the coil of relay 727, is connected to voltage-dropping resistor 719, from there to voltage-selection switch section 735–2A, through choke coil 703 to pin 22 of power output receptacle 734. Pin 22 connects by Cord CD–1086 to the receiver-transmitter and then to the receiver tube filaments, which lead relay 727 to ground as soon as control Ⓔ is placed on STANDBY. Thus, if switch section S103C, control Ⓔ, is turned to STANDBY, the circuit of the coil of relay 726 is opened and the circuit of the coil of relay 727 is completed and the coil of relay 727 is energized. The movable contact of relay 727, shown in the correct position for this condition, connects to both the center tap of the power transformer and VOLTAGE CHANGE SWITCH section 735–2B. Switch section 735–2B selects the correct voltage for operation of vibrator VB1.

132. Standby Vibrator and Rectifier Circuits of Vibrator Power Supply

a. Vibrator Circuits. The vibrator coil connected from pin 4 to the stationary contact and the movable arm connected to pin 1 constitute an ordinary buzzer similar to the door bell type, except that its vibrating arm or reed moves back and forth many times more rapidly than in the familiar door bell buzzer. The current through the vibrator coil attracts the reed, breaking the circuit to ground. This de-energizes the coil and the reed swings back in the opposite direction, completing the circuit to ground again. This cycle continues. The movable arm connects to ground through pin 1, and also makes contact with pins 2 and 3 in the two opposite directions of its vi-

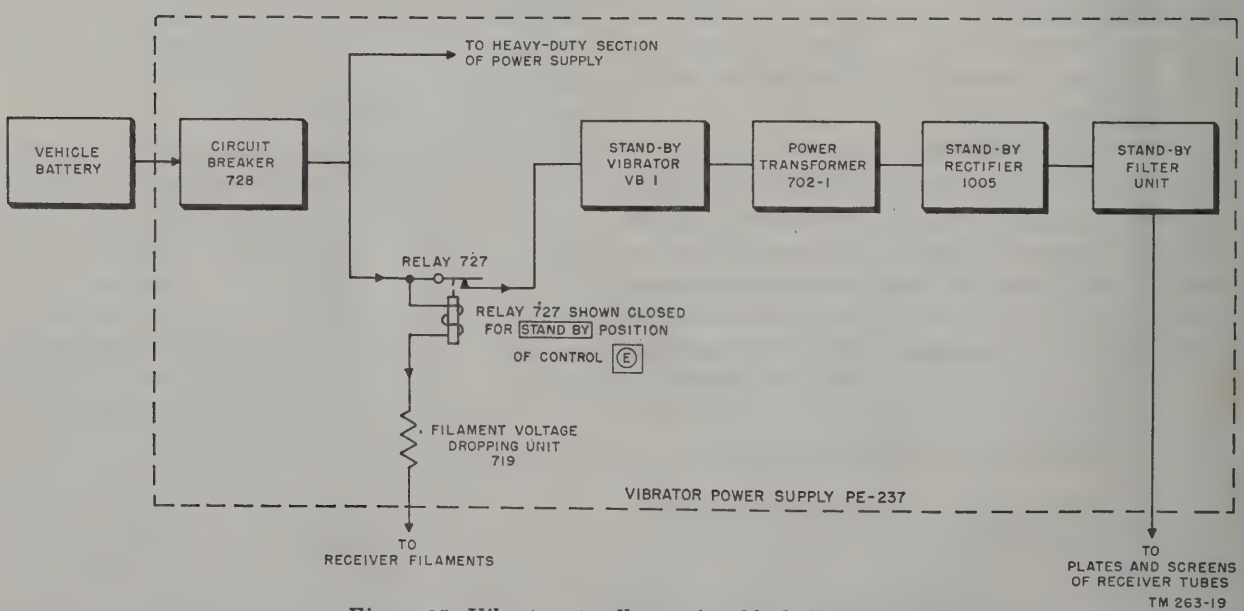
TO HEAVY-DUTY SECTION OF POWER SUPPLY
VEHICLE BATTERY
CIRCUIT BREAKER 728
STAND-BY VIBRATOR VB 1
POWER TRANSFORMER 702-1
STAND-BY RECTIFIER 1005
STAND-BY FILTER UNIT
RELAY 727
RELAY 727 SHOWN CLOSED FOR STAND BY POSITION OF CONTROL Ⓔ
FILAMENT VOLTAGE DROPPING UNIT 719
VIBRATOR POWER SUPPLY PE-237
TO RECEIVER FILAMENTS
TO PLATES AND SCREENS OF RECEIVER TUBES
TM 263-19

Figure 95. Vibrator standby section, block diagram.

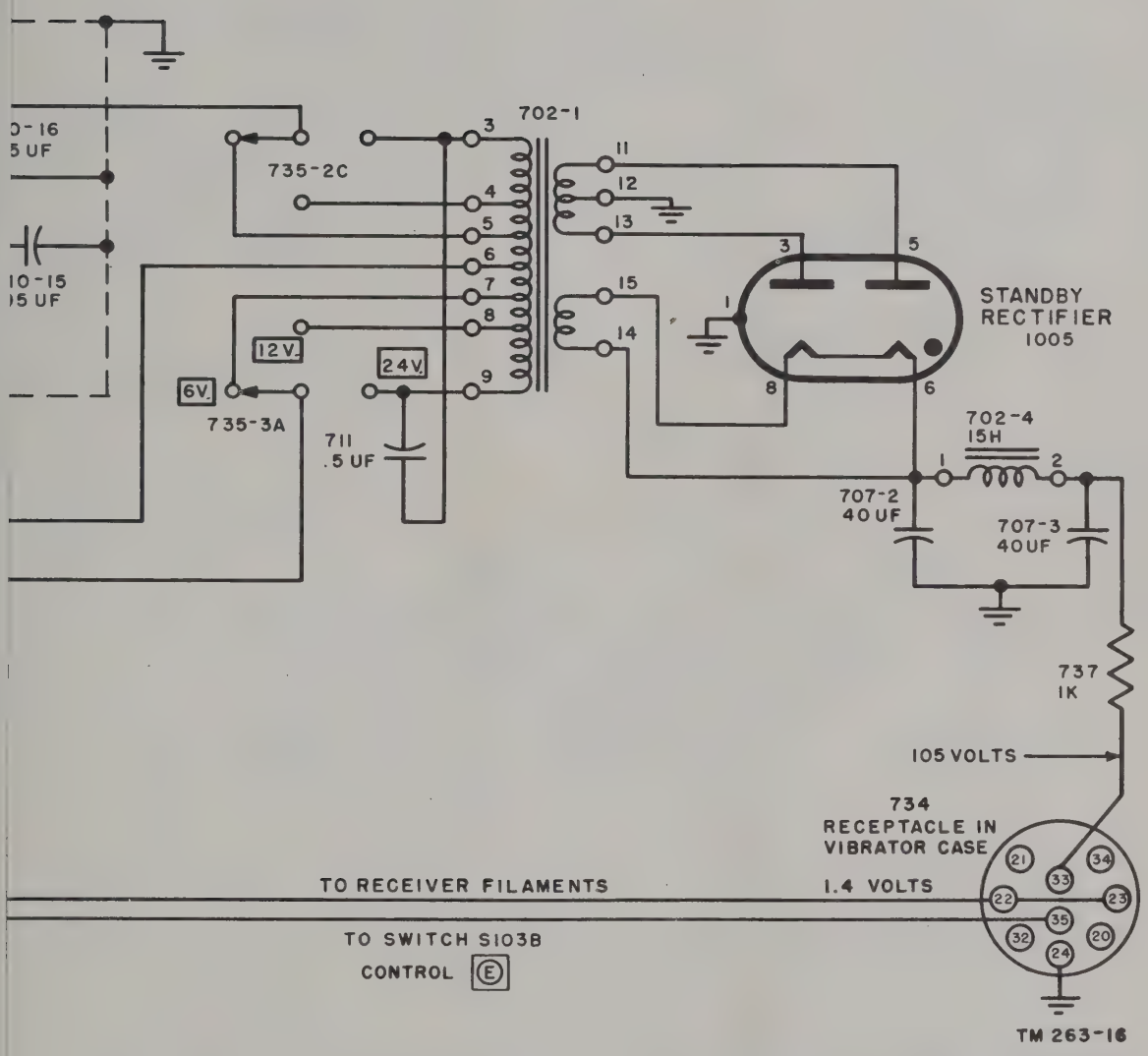

405863 O - 56 (Face p. 132) No. 1

nected to the negative terminal of the battery. The No. 2 lead connects to pin 35 of power output receptacle 734. Further, pin 35 connects to pin 55 of J102, the receiver-transmitter receptacle, through Cord CD–1086. As shown in figure 94 pin 55 can be connected to ground only if switch section S103B, which is part of the OFF-SEND-STANDBY control Ⓔ, is turned to SEND. Therefore, unless the control is placed on SEND, the coil of relay 726 is unenergized and out of the standby circuit.

(2) The contacts of relay 726 are shown for this unenergized condition and contacts H and I connect terminal 3 of the coil of relay 727 to the positive terminal of the battery, through the circuit breaker. The bottom side, terminal 4 of the coil of relay 727, is connected to voltage-dropping resistor 719, from there to voltage-selection switch section 735–2A, through choke coil 703 to pin 22 of power output receptacle 734. Pin 22 connects by Cord CD–1086 to the receiver-transmitter and then to the receiver tube filaments, which lead relay 727 to ground as soon as control Ⓔ is placed on STANDBY. Thus, if switch section S103C, control Ⓔ, is turned to STANDBY, the circuit of the coil of relay 726 is opened and the circuit of the coil of relay 727 is completed and the coil of relay 727 is energized. The movable contact of relay 727, shown in the correct position for this condition, connects to both the center tap of the power transformer and VOLTAGE CHANGE SWITCH section 735–2B. Switch section 735–2B selects the correct voltage for operation of vibrator VB1.

132. Standby Vibrator and Rectifier Circuits of Vibrator Power Supply

a. Vibrator Circuits. The vibrator coil connected from pin 4 to the stationary contact and the movable arm connected to pin 1 constitute an ordinary buzzer similar to the door bell type, except that its vibrating arm or reed moves back and forth many times more rapidly than in the familiar door bell buzzer. The current through the vibrator coil attracts the reed, breaking the circuit to ground. This de-energizes the coil and the reed swings back in the opposite direction, completing the circuit to ground again. This cycle continues. The movable arm connects to ground through pin 1, and also makes contact with pins 2 and 3 in the two opposite directions of its vi-

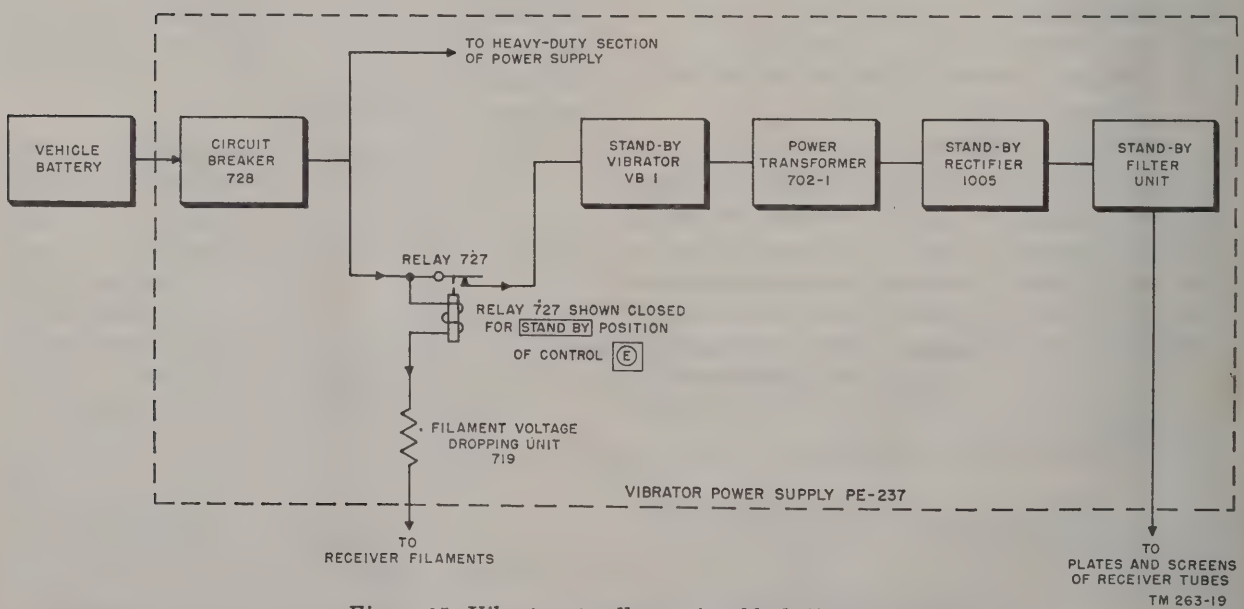
TO HEAVY-DUTY SECTION OF POWER SUPPLY
VEHICLE BATTERY
CIRCUIT BREAKER 728
STAND-BY VIBRATOR VB 1
POWER TRANSFORMER 702-1
STAND-BY RECTIFIER 1005
STAND-BY FILTER UNIT
RELAY 727
RELAY 727 SHOWN CLOSED FOR STAND BY POSITION OF CONTROL Ⓔ
FILAMENT VOLTAGE DROPPING UNIT 719
VIBRATOR POWER SUPPLY PE-237
TO RECEIVER FILAMENTS
TO PLATES AND SCREENS OF RECEIVER TUBES
TM 263-19

Figure 95. Vibrator standby section, block diagram.

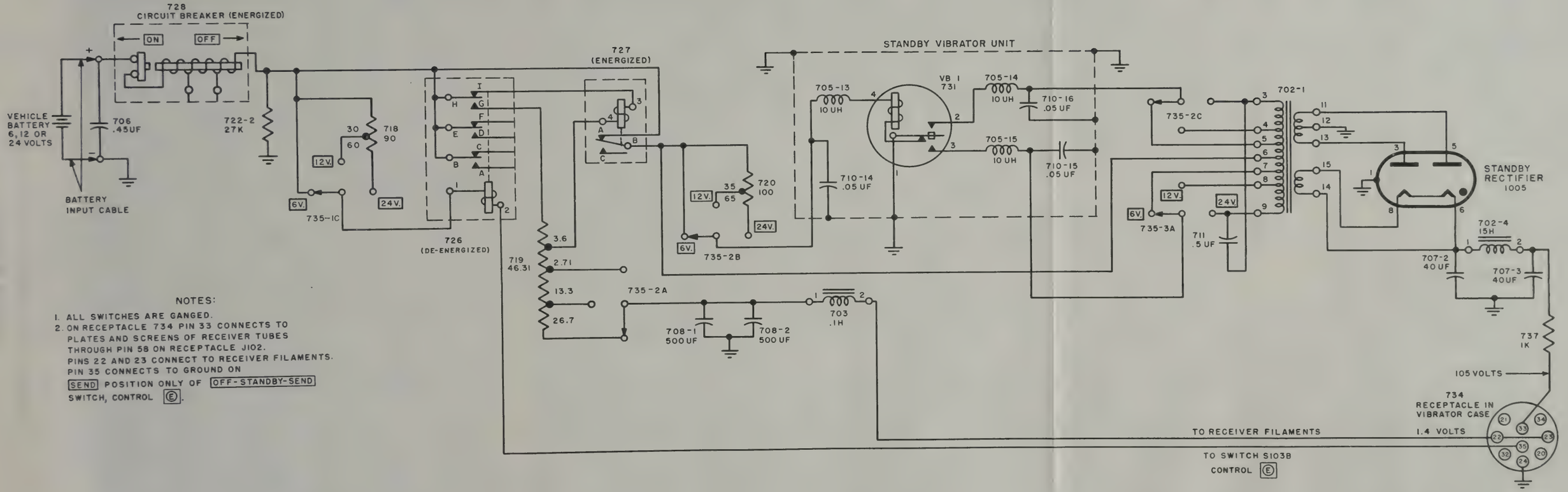

Figure 96. Vibrator standby section, simplified schematic diagram

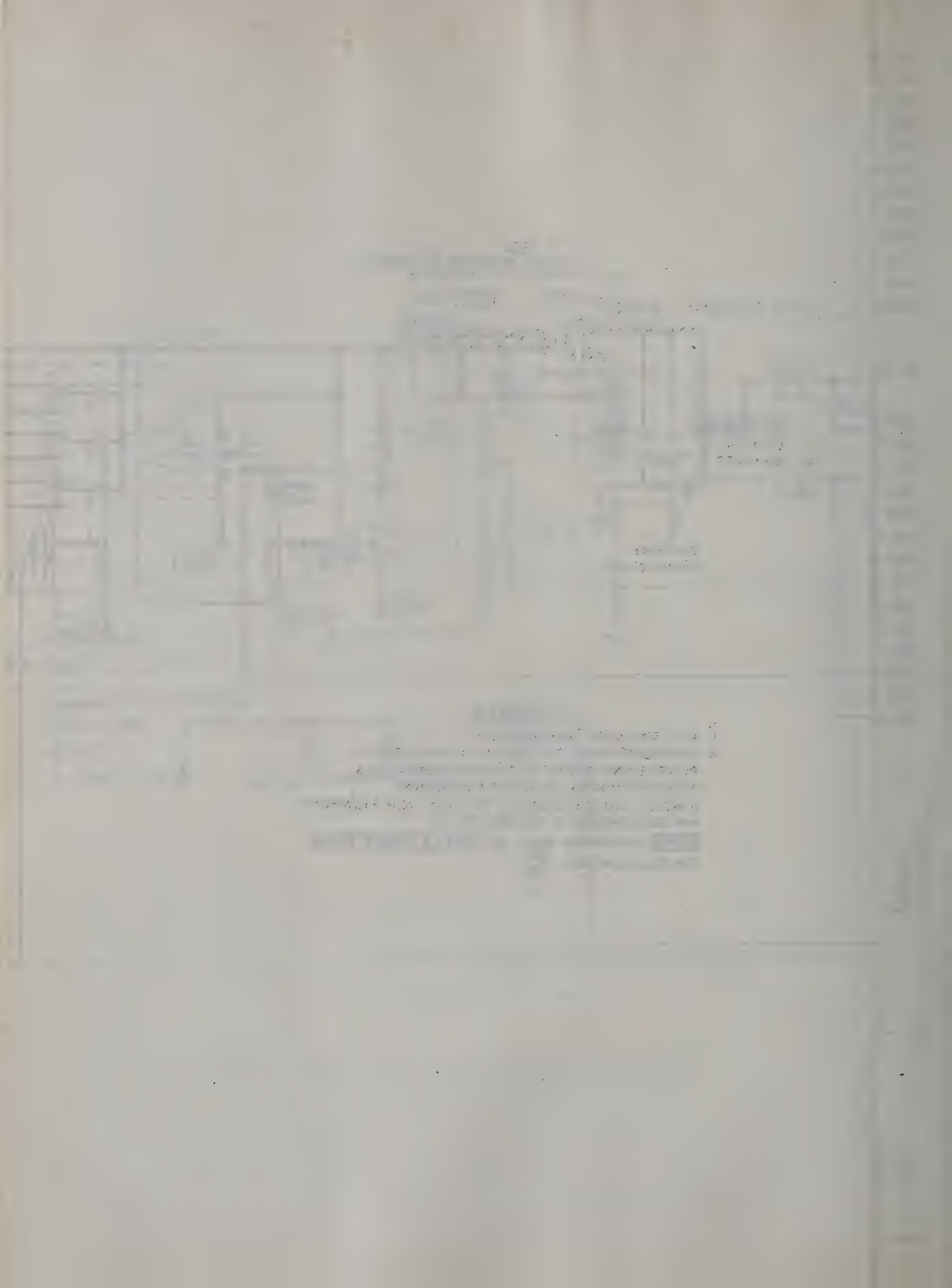

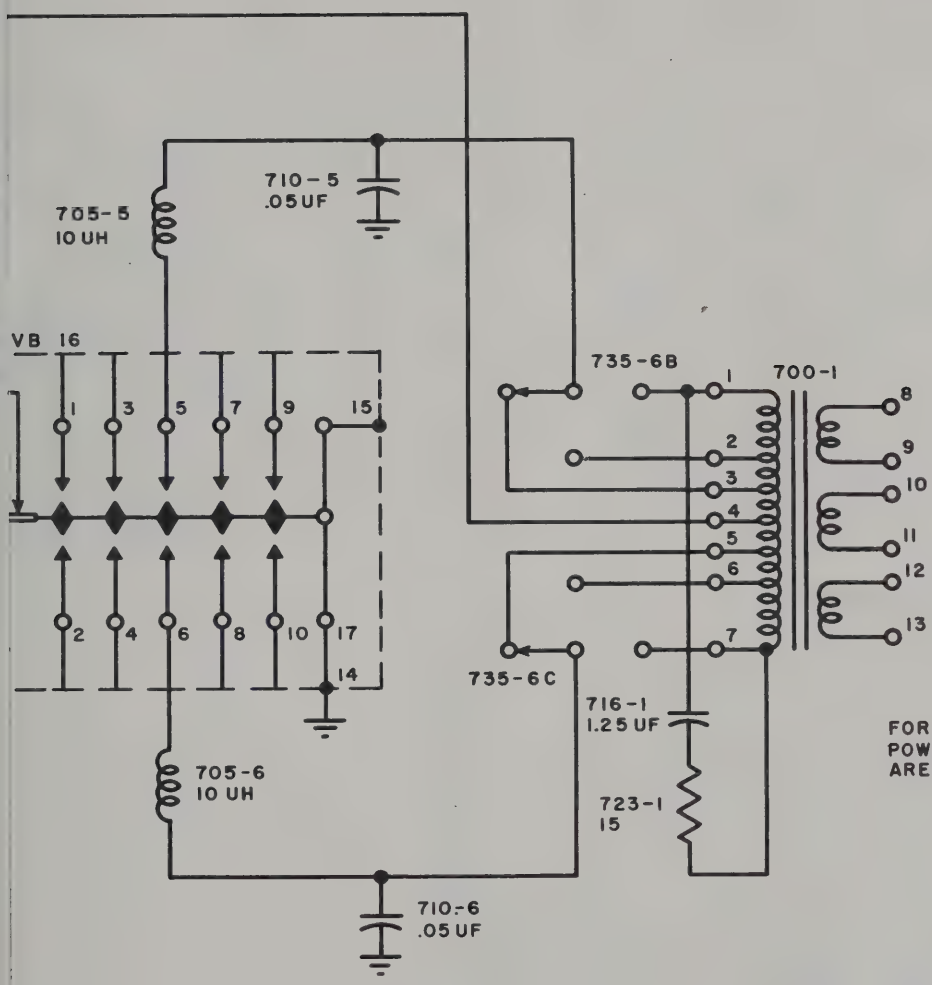

405863 O - 56 (Face p. 132) No. 2

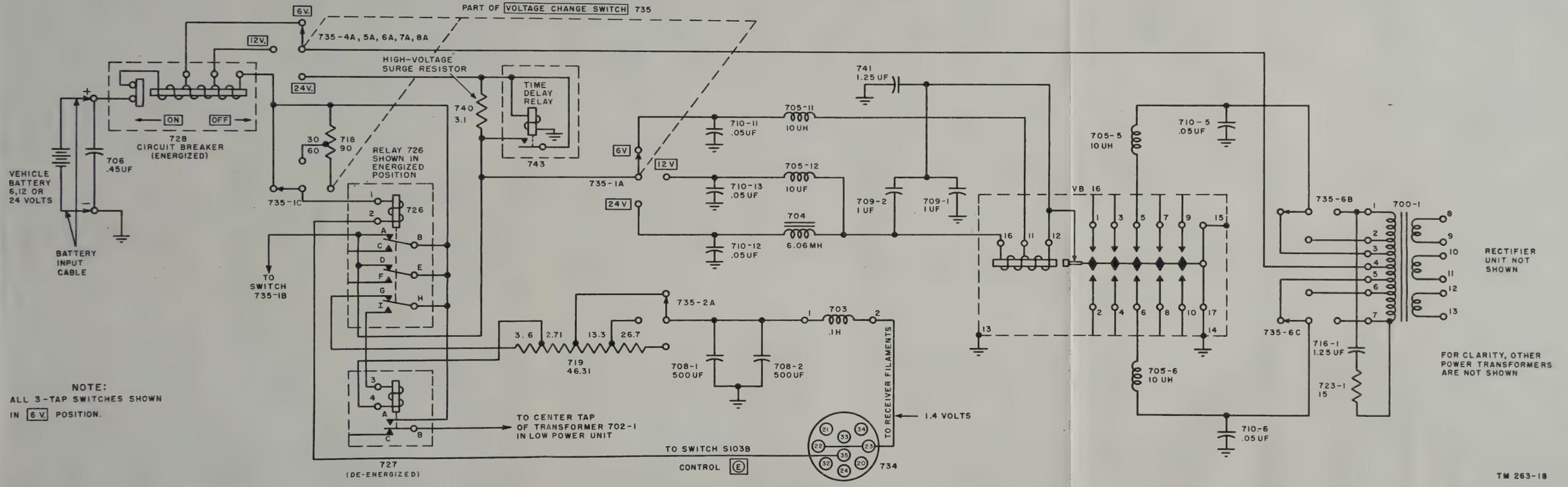

Figure 97. Vibrator heavy-duty section, simplified schematic diagram

405863 O - 56 (Face p. 132) No. 2

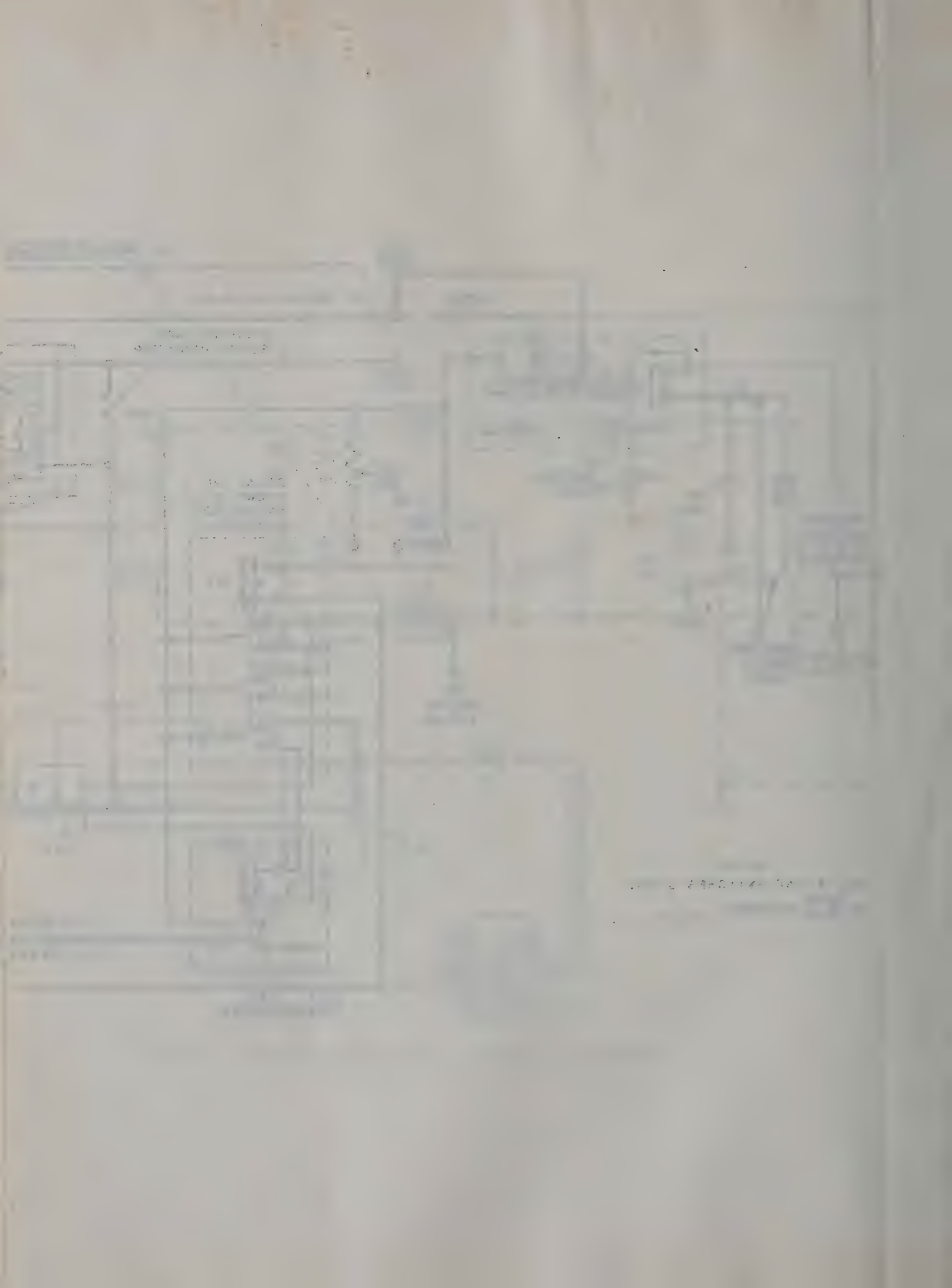

bration, thus connecting each pin alternately to ground (fig. 96). These pins (2 and 3) are connected to VOLTAGE CHANGE SWITCH sections 735–2C and 735–3A, which select the proper voltage for operation of the power transformer 702–1. Therefore, as the movable arm vibrates, alternately to connect the top and the bottom of the primary of transformer 702–1 to ground, center tap 6 connects through contacts A and B of relay 727 to the positive terminal of the battery. Because of this center tap, the current in the primary flows from the center to either the top or bottom half of the primary, depending on whether pin 2 or 3 of the vibrator is connected by the vibrating arm to ground. Therefore, the function of the vibrator is to cause an alternating current to flow through the transformer primary by making the battery current flow first in one direction and then in the opposite direction through the primary, simulating an alternating current. It is actually the pulse of dc sent through alternate halves of the primary that causes a voltage to be induced in the secondary.

b. Rectifier Circuits. The transformer secondary consists of two windings. The lv winding between taps 14 and 15 supplies the filament voltage for standby rectifier tube 1005. The hv winding between taps 11 and 13 applies a very large ac voltage to the plates of the rectifier tube for rectification. The rectified output of tube 1005 is taken from pin 6 to center tap 12 of the hv secondary, which is grounded. The hv output thus appears across electrolytic capacitor 707–2. Capacitor 707–2, in conjunction with choke coil 702–4 and capacitor 707–3, acts as a filter unit to suppress the ripple voltage in the output of rectifier tube 1005. The high direct voltage output (+105V) of the standby section is then fed to terminal 33 of power output receptacle 734 through voltage-dropping resistor 737. Terminal 33 connects by Cord CD–1086 to receiver-transmitter receptacle J102, pin 58 (fig. 94).

133. Other Standby Circuit Elements of Vibrator Power Supply (fig. 96)

a. In the explanation of the standby unit, several circuit elements have been omitted. This was done to clarify the essential points of operation. The functions of these elements are explained below.

b. Filter choke 705–13, 705–14, and 705–15 eliminates hash from the vibrator and are used in conjunction with rf filter capacitor 710–14, 710–15, and 710–16. Resistor 719 is the voltage-dropping unit used to accommodate the receiver filaments to the voltage of the battery used. Electrolytic filter capacitors 708–1 and 708–2 are used in conjunction with choke 703 to filter out any ripple in the battery voltage because of the intermittent current taken from the battery by vibrator VB1.

c. Capacitor 711 is the buffer, which improves the wave shape of the alternating voltage across the primary of power transformer 702–1. The improved wave shape minimizes vibrator arcing. Capacitor 706, across the power unit input, is an rf bypass to prevent the input cables from radiating rf noise that would interfere with radio reception.

134. Heavy-Duty Section of Vibrator Power Supply

The heavy-duty section of Vibrator Power Supply PE–237 supplies all the necessary power required to operate the receiver-transmitter. The filaments of the receiver obtain their voltage from the vehicle battery through suitable dropping resistors. The transmitter filaments, however, do not receive their voltage directly from the battery. The voltage for the transmitter filaments is obtained from the secondary of the vibrator transformers, through a voltage regulating transformer, a rectifier, and a filter, which maintain close control of the output voltage even though the input voltage varies over wide limits. The heavy-duty section uses five small power transformers, with the primary of each connected to two separate contacts on the vibrator, in place of one single transformer, as with the standby section. This system is used to distribute the power carried by the vibrator contacts, lengthening vibrator life.

135. Heavy-Duty Positions of Relays 726 and 727

a. Figure 97 shows the heavy duty section, up to the primary of one of the power transformers. The standby part is not shown, and neither is the

rectifier for the heavy duty section, which will be described in paragraph 142. Terminal 1 of the coil of relay 726 connects through voltage selector switch 735–1C to circuit breaker 728, and to the positive terminal of the vehicular battery. If the other end of the coil of relay 726 is connected to ground, the relay would be energized. Terminal 2 of the coil of relay 726 connects to terminal 35 of power output receptacle 734. Terminal 35 connects to terminal 55 of receptacle J102 on the transmitter by means of Cord CD–1086. Pin 55 (fig. 94) connects to ground when switch S103B is turned to SEND. Therefore, when control Ⓔ is turned to SEND, the coil of relay 726 is energized and pulls the movable contacts up (fig. 97).

b. Terminal 3 of the coil of relay 727 connects to a stationary contact I of relay 726 and, because of the position of the movable arm of relay 726, the coil of relay 727 receives no current from the battery. Therefore, because relay 727 is not energized, the standby section of the vibrator power unit is inoperative.

136. Receiver Filament Supply of Vibrator Power Supply

a. Filament-dropping resistor 719 connects directly to stationary contact G on relay 726 and through movable contact H, which is connected to the positive side of the battery through circuit breaker 728. Therefore, on SEND position of control Ⓔ, the receiver filaments obtain their current through contacts G and H of relay 726 (fig. 97), while on STANDBY the filament current flows through the coil of the other relay 727 (fig. 96).

b. The +1.4 volts from pins 22 and 23 is sent to the receiver filaments through Cord CD–1086 (fig. 54), and to pins 56 and 46 on receiver-transmitter POWER receptacle J102. Switch S103C (control Ⓔ) selects the filament voltage on the SEND position for the receiver from pin 46 and on STANDBY, the switch connects pin 56 to the receiver (fig. 94).

137. Switch Sections 735–4A, –5A, –6A, –7A, and –8A (fig. 97)

Center tap 4 of power transformer 700–1 is connected to switch sections 735–4A, –5A, –6A, –7A, and –8A. This portion of switch 735 is a ganged bank of five wafer switches with corresponding contacts wired in parallel so that the heavy current taken by the power transformers can be handled safely. The purpose of this part of the VOLTAGE CHANGE SWITCH is to accommodate the transformer to a 6-, 12-, or 24-volt battery. For the 24-volt position, a slightly different arrangement is necessary than for 6 or 12 volts (par. 138).

138. Hv Starting Resistor of Vibrator Power Supply (fig. 97)

In the later models of Vibrator Power Supply PE–237 (serial numbers 22436 through 26799), a hv starting resistor and a time delay relay are used. Resistor 740 is the hv surge resistor. It is connected in the input circuit of the vibrator power supply only when the unit is operated with the VOLTAGE CHANGE SWITCH in the 24-volt position. It serves to prevent flare-up at the power contacts of vibrator VB16. The possibility of flare-up is caused by the initial surge of current when the unit is started and the supply voltage is high. Resistor 740 limits this initial surge. Time delay relay 743 shorts out resistor 740 after approximately 100 milliseconds, and the full normal voltage is applied to the receiver-transmitter. The relay does not operate on the 12- or 6-volt position of VOLTAGE CHANGE SWITCH 735.

139. Driving Coil of Vibrator VB16 (fig. 97)

Two of the stationary contacts, A and D, of relay 726 are connected to switch 735–1A, which is the voltage selector for the driving coil of vibrator VB16. Because of the position of the movable contacts in the SEND position of transmitter control Ⓔ, these two stationary contacts are connected to the positive side of the vehicular battery through the circuit breaker. Three taps numbered 16, 11, and 12 are on the driving coil of the vibrator. Tap 12 is connected to ground whenever the vibrating reed touches the stationary contact to which tap 12 is connected. Current enters the driving coil through choke coil 705–11, 705–12, or 704, depending on the position of VOLTAGE CHANGE SWITCH 735–1A. When switch 735–1A is on the 6V. position, the battery current enters the driving coil at tap 11. On either

the 12V. or 24V. position, battery current enters at tap 16. Choke coil 704 in the 24-volt line has a higher resistance than choke 705–12 in the 12-volt line. The voltage drop across this higher resistance compensates for the higher battery voltage.

140. Vibrator VB16 and Power Transformer (fig. 97)

a. The center tap of power transformer 700–1 is connected through switch sections 735–4A, –5A, –6A, –7A, –8A to the positive side of the battery. The vibrator connects the primary leads alternately to ground to simulate an alternating current in the primary. The vabrating reed is grounded at pin 14, while the outside leads of the primary are connected to pins 5 and 6 through switch sections 735–6B and 735–6C.

b. There are five pairs of contacts. Just as pins 5 and 6 connect to the primary leads through voltage selector switches, so do the other four pairs of pins connect to four other identical power transformers. There are in effect five identical transformers with their primaries connected in parallel by the vibrating reed. Refer to the vibrator power supply main schematic diagram (fig. 172), for example transformer 700–4. Terminal 5 of the primary goes to switch 735–4C, and from there, through choke coil 705–10 to contact 10 of vibrator VB16. Terminal 3 of the primary goes to switch 735–4B, and from there, through choke coil 705–9 to contact 9 of the vibrator.

141. Other Heavy-Duty Circuit Elements of Vibrator Power Supply

a. In the explanation of the heavy-duty section so far, the functions of several components have not been mentioned. Some of the components are drawn only on the vibrator power supply main schematic diagram (fig. 172). Capacitors 710–1 through 710–13, in conjunction with chokes 704 and 705–1 through 705–12, filter out rf interference produced by the sparking of the vibrator contacts. Capacitors 709–1, 709–2, and 741 suppress sparking at the driving coil contact of the vibrator.

b. Capacitors 716–1 through 716–5, across the primaries of the power transformers, are the buffer capacitors which improve the wave shape of the primary current, thus lengthening the life of the vibrator contacts by reducing sparking. Resistors 723–1 through 723–5, which are in series with the buffers, damp out any oscillations which might occur because of the interaction of the buffers with the leakage reactances of the power transformers.

142. Rectifier and Hv Filter of Vibrator Power Supply

a. The ac surges through the primaries of the power transformers cause a very high voltage to be induced in the secondaries (fig. 98). All the secondaries that have taps marked 8, 9, 10, and 11 are connected in series, except the windings of transformer 738. The combined voltage present in this series combination is impressed upon the plates of rectifier tube 1006, which operates as a full-wave rectifier, and is rectified. The filament of tube 1006 receives its voltage from taps 8 and 9 of transformer 738 and this is the only purpose for which transformer 738 is used. Because of rf noise generated in gas tube 1006, it is necessary to place rf choke coils 725–1 and 725–2 in series with the rectifier plates to filter out any rf disturbances which occur. Hash suppression filters, located in the filament leads, consist of capacitors 739–1 and 739–2 in conjunction with choke coils 705–16 and 705–17. The rectified hv output is taken from pin 4 of tube 1006, to ground.

b. The output is filtered by choke coil 702–3, in conjunction with capacitors 714–1, 714–2, and 715. There is an additional filtering feature because the hv lead from the rectifier tube is connected to tap 18 and not tap 17 of choke coil 702–3. This is done so that the ripple current entering the choke will divide and flow from tap 18 in opposite directions through the coil, and thereby the magnetic effect of the ripple current will partly cancel itself out.

c. The filtered hv at tap 19 of choke 702–3 is connected to terminal 32 of power output receptacle 734. Capacitor 736 is an additional hash filter to prevent rf disturbances from entering the transmitter. Resistors 721–1 and 721–2 are used to drop the voltage to the plates and screens of the receiver-transmitter tubes. Choke coil 725–3, connected to pin 4 of tube 1006 is a hash suppression filter.

d. To discharge filter capacitors 714–1, 714–2,

and 715 when the vibrator power supply is turned off, resistors 722–1 and 722–2 are placed across them to ground. This allows the stored charge to leak off to ground (fig. 172). Resistor 722–1 connects to resistor 722–2 and ground only when relay 726 contacts, E and F are in the standby position.

143. Transmitter Filament Supply of Vibrator Power Supply (figs. 99 and 100)

a. The filaments of the transmitter tubes receive their power from power transformer windings with taps marked 12 and 13 connected in series. This combined voltage is then fed to taps 1 and 2 of a special constant-voltage step-down transformer, 701. This transformer acts to keep the output voltage to selenium rectifier 729 constant, regardless of battery voltage changes within certain limits (fig. 100). Input voltage to the transformer is applied to the primary, coil 1.

b. In an ordinary transformer, coil 1 would induce a voltage in coil 4, the secondary. However, there is placed between coils 1 and 4 a magnetic shunt that serves to isolate, to a large extent, coil 1 from 4. Coil 2 is tuned to resonate at the major frequency of the vibrator output current, through coil 1. Therefore it has a large current

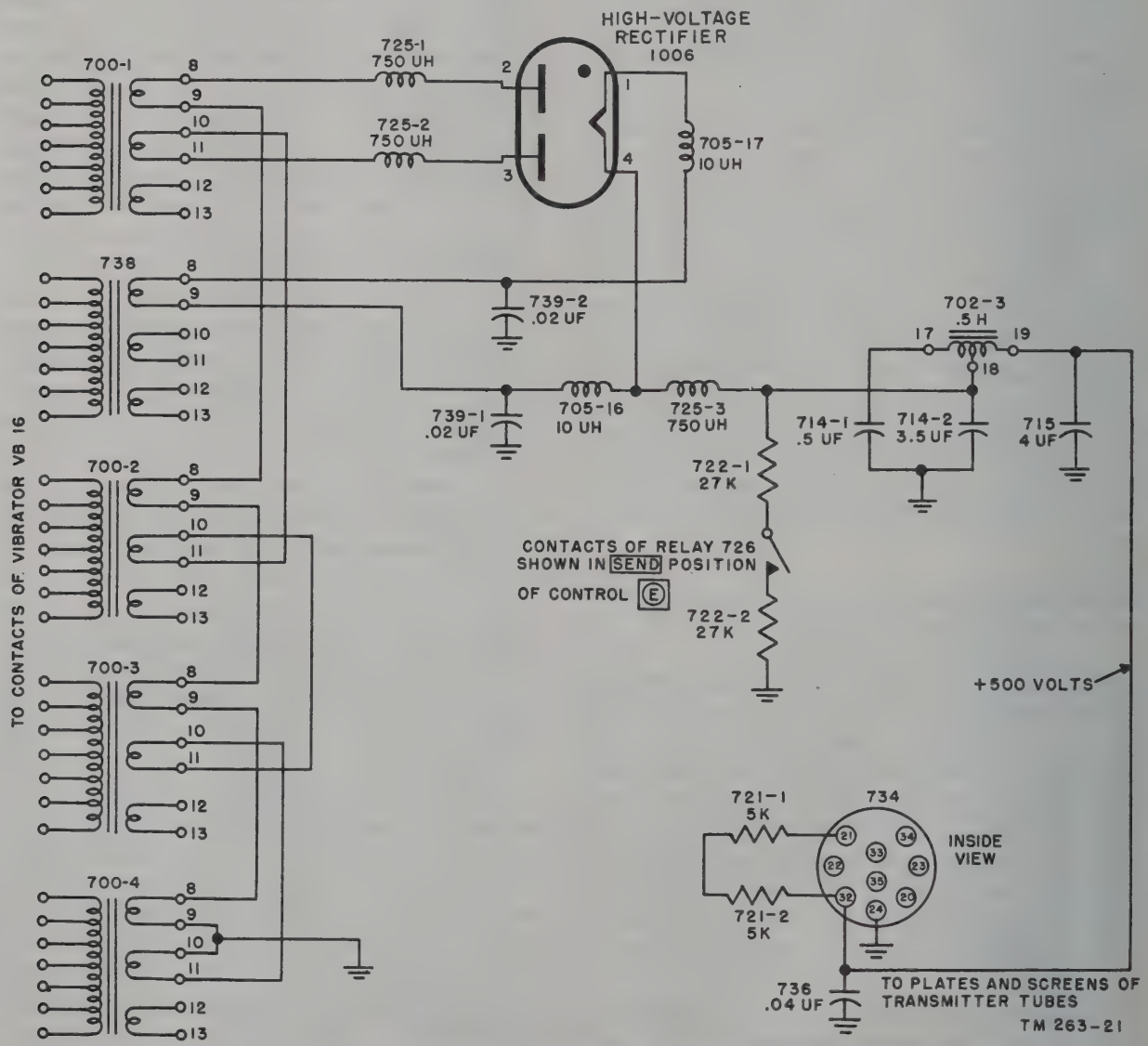

Figure 98. High-voltage rectifier and filters of heavy-duty section, simplified schematic diagram.

flowing through it, even though it too has a magnetic shunt between it and the primary, coil 1. This large current in coil 2 induces a voltage in the secondary, coil 4. Also, since there is high current in the tuned tank, the iron core between it and coil 4 is saturated. This means that variations in magnitude of current in coil 2 do not have a great effect on the voltage induced in the secondary, coil 4.

c. Coil 3, the compensating winding, is on the same side of the magnetic shunt as coil 1 and, therefore, coil 1 induces a voltage in coil 3. Coil 3 is connected in series with coil 4 in such a manner as to buck the voltage in coil 4. Assume that the transformer is operating, and suddenly, for some reason, the voltage placed across the primary is increased. The voltage induced in coil 2 does not change too much because of the magnetic shunt. Next, the voltage induced in coil 4 by the current in coil 2, changes even less because of the saturation of the core between coil 2 and 4. Also, since coil 3 is connected to oppose the voltage of coil 4, the voltage induced in coil 3 by the voltage change in the primary counteracts the change in the secondary, coil 4.

d. By these means, the output of the regulated transformer is kept constant with changes of primary input. The output of the transformers is then fed to the selenium rectifier 729 which changes the ac to pulsating dc.

e. The rectified output is then fed to the filter unit, which consists of capacitor 712–1, choke coil 702–2, and capacitor 712–2. Resistor 724 is made adjustable so that compensation can be made for

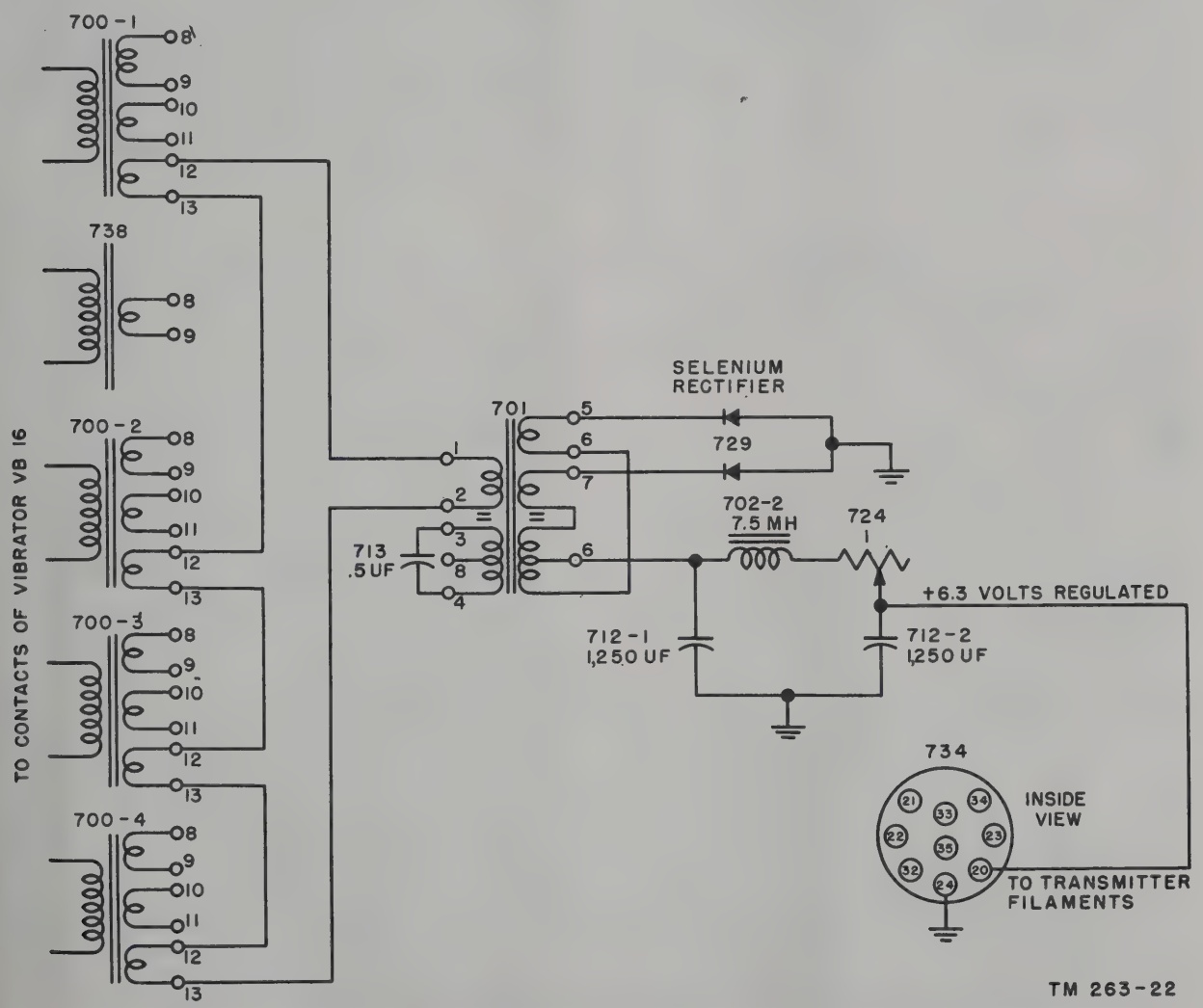

Figure 99. Vibrator power supply, filament voltage supply for transmitter, simplified schematic diagram.

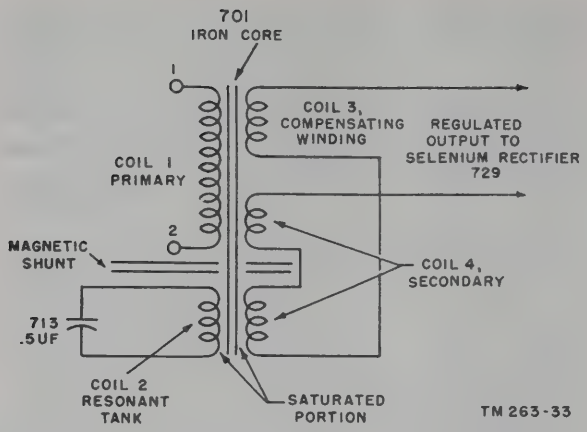

Figure 100. Constant voltage transformer 701.

any changes of characteristics in selenium rectifier 729 or any other component associated with the transmitter filament supply circuit. The 6.3-volt regulated output is connected to pin 20 of receptacle 734, from which it is connected by Cord CD–1086 to pin 54 of receptacle J102 on the transmitter (fig. 94).

144. Transmitter Keying Relay Supply Circuit of Vibrator Power Supply (fig. 101)

a. Keying relay K101 in the transmitter is fed with 6.3 volts through suitable dropping resistors, directly from the vehicle battery. The current from the battery flows through the coil of circuit breaker 728 to the movable contacts of relay 726.

b. On the SEND position of control Ⓔ in the transmitter, relay 726 is energized and the movable contacts are in the position shown in the figure. These movable contacts, B and E, then are in contact with the stationary contacts, A and D, which are connected to VOLTAGE CHANGE SWITCH 735–1B. Switch 735–1B connects to pin 34 of receptacle 734, which is connected by Cord CD–1086 to pin 45 of receptacle J102 in the transmitter. Capacitor 707–1 is placed in the circuit to filter out the vibrator ripple voltage. Switch 735–1C is used to accommodate the coil of relay 726 to a 6-, 12-, or 24-volt vehicular battery.

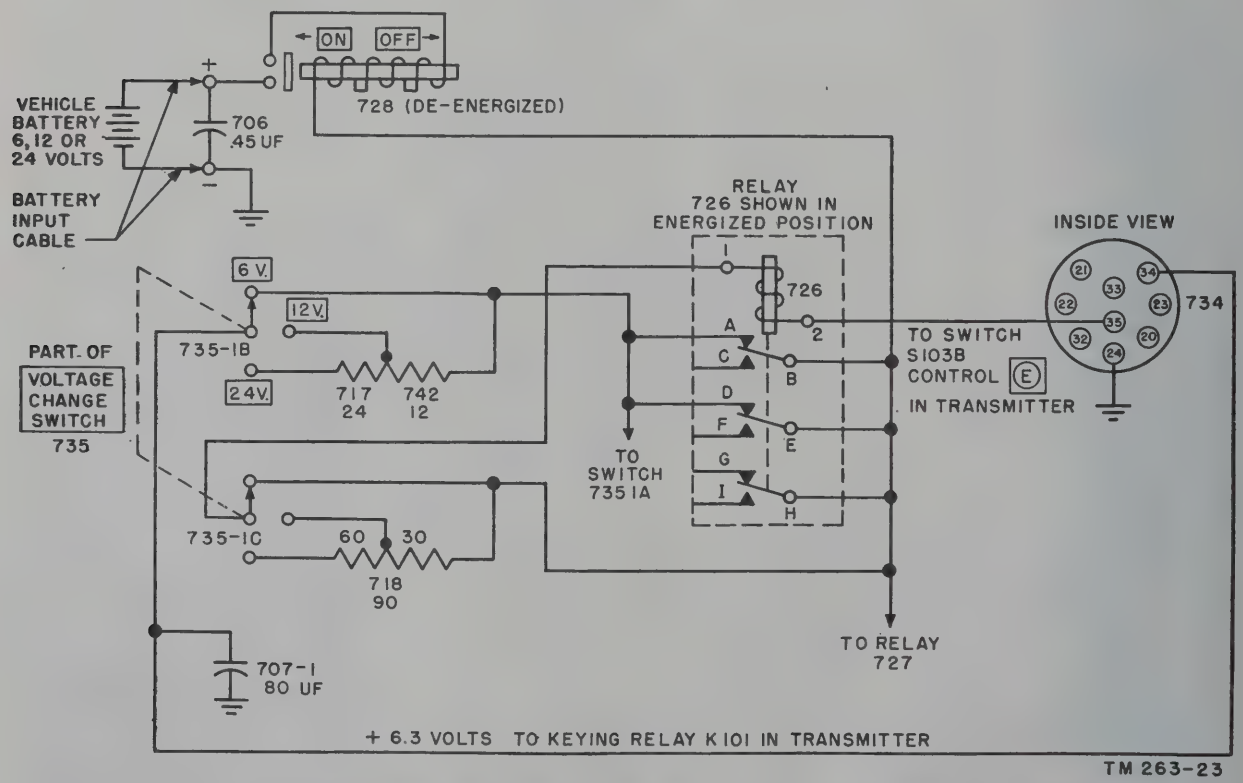

Figure 101. Vibrator power supply, keying relay supply voltage for transmitter, simplified schematic diagram.

145. Circuit Changes for Vibrator Power Supply

a. Capacitor 739–1 and 739–2 (fig. 98), which are the filament bypass capacitors for the hv rectifier tube 1006 filaments, are not suppled in early models of Vibrator Power Supply PE–237. Hv surge resistor 740 and time delay relay 743 are used only in models having serial numbers 22436 and up (figs. 97 and 172).

b. Another change is the method of operation of rectifier tube 1006. In the late models (fig. 172) of the vibrator power supply, this tube has its filament heated by voltage from transformer 738, while only four power transformers, 700–1 through 700–4, supply plate voltage to the rectifier tube (fig. 98). In the older models, the filament of the hv rectifier tube 1006 did not have any voltage applied to it, so it operated as a cold-cathode rectifier, having five power transformers supplying rectifier plate voltage (fig. 171).

c. For models with serial numbers 501 to 650, on Order No. 53906–P–45, the tube is a cold-cathode rectifier. Plate voltage power transformer 700–2 has been disconnected and no longer supplies the rectifier plates. This has been done to reduce the output voltage of the vibrator power supply because of the high battery input voltages found in field service.

d. In still later models, serial numbers 651 through 1000, Order No. 53906–P–45, power transformer 700–2 is used, but transformer 700–5 has been removed. Also, filament supply transformer 738 has been added to supply the voltage for the operation of the filament of tube 1006, thus transforming it into a hot-cathode rectifier. In this model, only four transformers supply plate voltage for rectification. The latest model, Order No. 10250–Phila–49, serial numbers 10101 to 14464, inclusive, is also a hot-cathode type with four plate voltage supply transformers for the hv rectifier.

Section V. THEORY OF DYNAMOTOR-POWER SUPPLY DY–88/GRC–9

146. General

Dynamotor-Power Supply DY–88/GRC–9 is used to convert a 6-, 12-, or 24-volt dc input from a vehicular storage battery into the necessary operating voltages for the receiver-transmitter. The dynamotor power supply consists of a multiwinding dynamotor (D201), a synchronous (self-rectifying) vibrator, and various regulatory and control elements. To control the operation of Dynamotor-Power Supply DY–88/GRC–9 from Receiver-Transmitter RT–77/GRC–9, the TRANS & RECEIVE-OFF switch on the dynamotor power supply first must be turned to TRANS & RECEIVE. The dynamotor operates when either the receiver or the transmitter is in operation and when the OFF-SEND-STANDBY switch on the transmitter (control Ⓔ) is turned to SEND. When control Ⓔ is turned to STANDBY, the dynamotor does not operate and the receiver is supplied from the lv vibrator circuits in the dynamotor power supply. Thus the battery is not drained excessively during the prolonged periods of listening.

147. Functional Diagram (fig. 102)

a. Receiver start relay K203 is energized and the receiver filaments obtain their voltage when the OFF-SEND-STANDBY switch, is turned to the STANDBY or SEND position (par. 149). A ballast resistor drops the battery voltage to the proper operating filament voltage.

b. When receiver start relay K203 is energized, contacts 3 and 7 close and the battery provides power to the vibrator circuits which step up the low-battery voltage to a higher dc voltage (par. 150). During standby periods, the voltage (+105 volts) is fed through normally closed contacts 3 and 2 of transmitter start relay K202 and dropping resistor R203 to the plate and screen circuits of the receiver.

c. Transmitter start relay K202 is energized when control Ⓔ is turned to the SEND position (par. 151). Contacts 5 and 6 and 3 and 4 close while contacts 3 and 2 open. The vibrator output now is fed through contacts 3 and 4 of K202 to the plate and screen circuits of the receiver when relay K101 is de-energized or to the transmitter tubes (except V103) when relay K101 is energized. The current drain during send periods is higher than the drain during standby periods because portions of the transmitter are powered from the 105-volt supply.

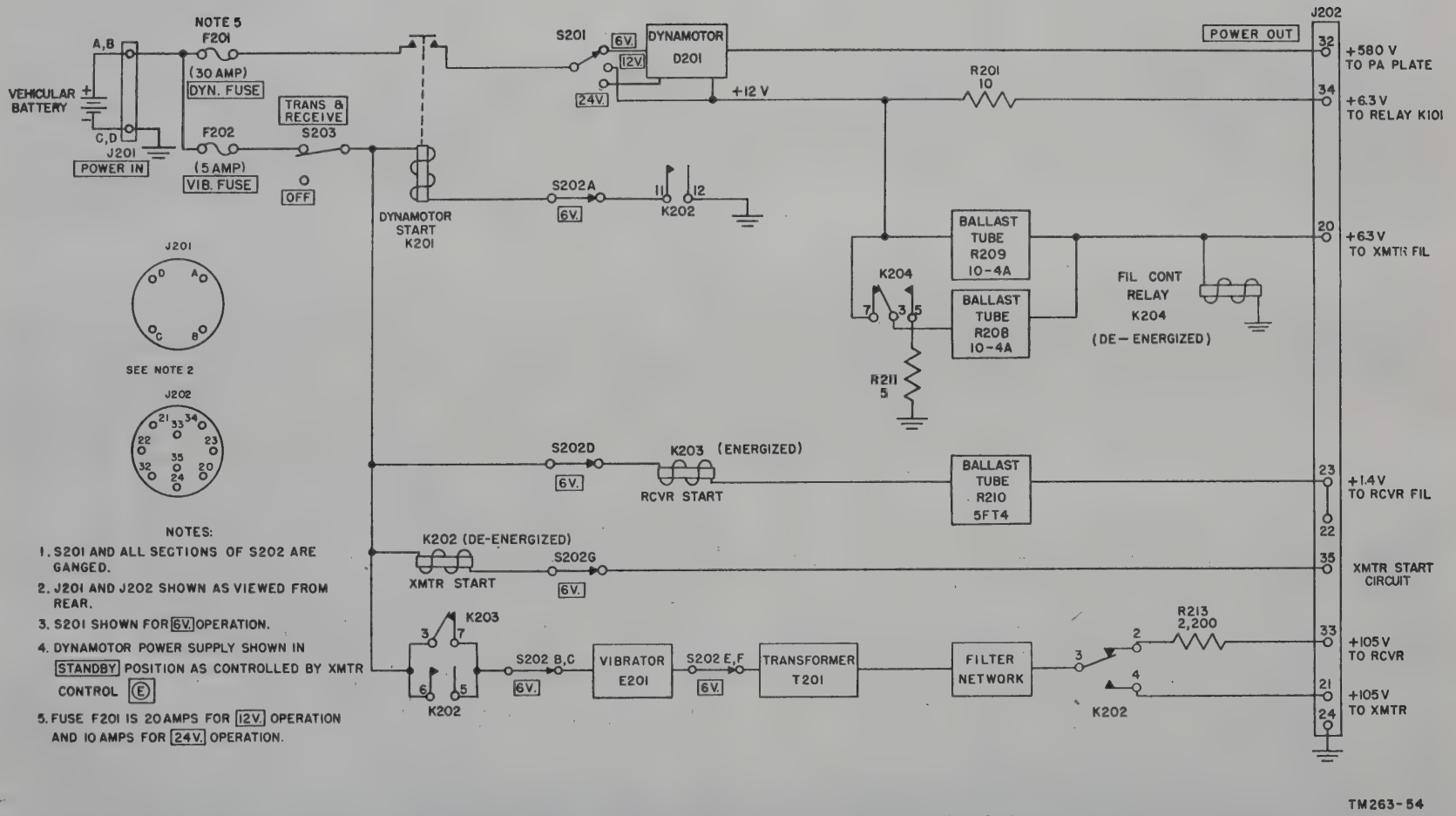

Figure 102. Dynamotor-Power Supply DY-88/GRC-9, functional diagram.

d. When K202 is energized (control Ⓔ is at SEND), contacts 11 and 12 close, energizing dynamotor start relay K201. The battery voltage is fed through the closed contacts of K201 to a lv winding in the dynamotor. The dynamotor operates as a dc transformer (par. 154), which steps up the lv dc to hv dc. The hv output from the dynamotor power supply is fed to the plate and screen of the transmitter pa tube (par. 152).

e. During send periods, the transmitter filaments and keying relay K101 receive their operating voltages from the dynamotor power supply (par. 153). If voltage selector switch S201 is in the 12-volt position, the battery voltage (12 volts) is fed through voltage-dropping resistor R201 to the keying relay circuits and through two ballast resistors in parallel to the transmitter filaments. If S201 is in the 6- or 24-volt position, the 12-volt output is taken from the dynamotor and fed through the ballast resistors and R201 to the transmitter filament and keying relay circuits.

148. Fuses and Switches of Dynamotor-Power Supply DY–88/GRC–9 (fig. 103)

a. Fuses. The vehicular battery is connected by Electrical Special Purpose Cable Assembly CX–2031/U to the + and — terminals of power in receptacle J201 on the dynamotor power supply. Rf bypass capacitor C213 prevents the input cables from radiating rf noise that would interfere with radio reception. DYN. FUSE F201 protects the dynamotor circuits (fig. 104). *This fuse must be changed each time the battery voltage is changed.* VIB. FUSE F202 protects the vibrator circuits.

b. Switches. The voltage selector switches, S201 and S202, in the dynamotor power supply are ganged to one common shaft and perform the function of connecting the correct circuit components when a 6-, 12-, or 24-volt vehicular battery is used. There are several wafer sections of S202, numbered S202A through S202F. TRANS & RECEIVE-OFF switch S203 is a single-section rotary switch.

149. Receiver Filament Supply of Dynamotor-Power Supply DY–88/GRC–9 (fig. 103)

a. When control Ⓔ (S103) is in the SEND or STANDBY position, 1.4 volts dc is supplied to the filaments of the receiver tubes (fig. 94). The battery voltage is fed through VIB. FUSE F202 and when switch S203 is placed in the TRANS & RECEIVE position. Switch S202D introduces the proper resistance to permit the circuit to operate from each of the three different battery voltages used. In the 6-volt position, no resistance is introduced; in the 12-volt position, R202 is switched into the circuit; in the 24-volt position, R202 and R203 in series are switched into the circuit.

b. The circuit then is completed through the coil of receiver start relay K203, ballast R210, S103C (fig. 94), PHONES jack J1 or J2, and the receiver filaments to ground (fig. 66). The current that flows in this circuit energizes K203. Capacitor C215 acts to eliminate ripple.

c. Ballast tube R210 is a thermal resistor in series with the receiver filament supply. It acts as a voltage regulator, maintaining a constant voltage output for the receiver filaments under conditions of varying input voltage.

d. When control Ⓔ is in the STANDBY position, the receiver filaments obtain their power through terminals 22 and 23 on J202. When control Ⓔ is in the SEND position, the receiver filaments obtain their power through terminals 22 and 23 of J202.

150. Receiver Plate and Screen Supply of Dynamotor-Power Supply DY–88/GRC–9 (fig. 103)

a. Synchronous vibrator E201 and transformer T201 are used to supply 105 volts dc at 17 ma to the receiver plate and screen circuits during standby periods, and 105 volts dc at 45 ma to the plate and screen circuits of V5 and V6 in the receiver.

b. Receiver start relay K203 is energized when control Ⓔ is at the SEND or STANDBY position (par. 149). Battery current passes through closed contacts 3 and 7 of K203, or 5 and 6 of K202, or both, to voltage selector switch S202B and to the center tap (terminal 9) of transformer T201. Switch S202B introduces the proper resistance into the circuit to permit the circuit to operate from each of the three different battery voltages used.

c. Either a series-drive or a shunt-drive vibrator may be used in the vibrator section of

the power supply. The principles of operation of the series-drive vibrator are explained in (1) and (2) below and the shunt-drive vibrator is explained in (3) below.

(1) The series-driven vibrator coil, connected from pin 4 to the stationary contact, and the movable arm, connected to pin 7, constitute an ordinary buzzer similar to the doorbell type. However, the vibrating arm or reed moves back and forth many times more rapidly than in the familiar doorbell buzzer. The current through the vibrator coil attracts the reed, breaking the circuit to ground. This deenergizes the coil and the reed swings back in the opposite direction, completing the circuit to ground again. This action continues, causing the reed to swing back and forth rapidly. The movable arm connects to ground through pin 7, and also makes contact with pins 1 and 6 in the two opposite directions of its vibration, thus connecting each pin alternately to ground. (Pins 2 and 5 are described in (2) below.) Pins 1 and 6 are connected to voltage selector switches S202E and S202F, which select the proper voltage for operation of transformer T201. Therefore, as the movable arm vibrates alternately to connect the top and the bottom of the primary of T201 to ground, the center tap (terminal 9) of the transformer connects to the positive terminal of the battery. Because of this center tap, the current in the primary flows from the center to either the top or the bottom half of the primary, depending on whether pin 1 or 6 of the vibrator is connected by the vibrating arm to ground. Therefore, the function of the portion of the vibrator considered so far is to cause an alternating current to flow through the transformer primary by making the battery current flow first in one direction and then in the opposite direction through the primary, simulating an alternating current. It is actually the pulses of dc sent through alternate halves of the primary which cause a voltage to be induced in the secondary.

(2) The vibrator contains an extra pair of contacts (pins 2 and 5) that rectify the output voltage of T201; this eliminates the need of a rectifier tube. Pins 2 and 5 are grounded alternately as explained in (1) above. The secondary output from T201 is across transformer terminals 2 and 1 or 2 and 3, depending on whether vibrator pin 5 or 2 is grounded at the time. The transformer windings are phased so that the voltage from terminal 2 to ground always is positive. Thus, terminal 2 on transformer T201 becomes a dc source.

(3) When a shunt-drive vibrator is used, current for the driving coil is supplied in series with one-half of the transformer primary in use. Thus, for 24-volt operation, current flows from ground (pin 7 on the vibrator socket) through the vibrator coil to pin 3 on the vibrator socket, switches S202C and S202F, through the transformer primary (terminals 10 and 9), to the positive battery terminal. A simiilar circuit exists for 12- and 24-volt operation, except that less turns of the power transformer primary are used, and resistor R206 (12-volt operation) or resistors R206 and R207 in series (6-volt operation), are connected to limit the driving coil current. Vibrator action depends on the fact that each time the driving coil pulls the reed to make contact with pins 1 and 2, the driving coil is effectively short-circuited through vibrator pins 3 and 1. This causes the coil to release the reed, which then swings over to make contact with pins 5 and 6. At the same time current again flows in the driving coil and pulls the reed back. The result is that the vibrator reed is caused to oscillate continuously. The action of the reed as it contacts pins 1 and 2, and then pins 5 and 6, is described in (1) and (2) above.

d. The rectified output from T201 is filtered by resistor R212 and capacitors C229A and C229B. During standby operation, the output is fed through contacts 3 and 2 of K202 to voltage-dropping resistor R213. The 105-volt dc at 17 ma then is fed through terminal 33 of output receptacle J202 to the receiver plates and screens.

e. With control Ⓔ in SEND, K202 is energized and contacts 3 and 2 open while contacts 3 and 4 close. The filtered output then is fed through contacts 3 and 4 to terminal 21 on POWER OUTPUT receptacle J202. From J202, the +105 volts is fed through CD–1086 to terminal 57 on transmitter POWER receptacle J102, through S103D (fig. 94) and to V104 (figs. 67 and 91).

f. In the explanation of the receiver plate and screen supply circuits several circuit elements were omitted. This was done to clarify the essential points of operation. The functions of these elements are explained below.

(1) Filter chokes L202 through L206 and rf filter capacitors C217 through C224 are used for elimination of hash caused by the vibrator.

(2) Capacitor C226 is the primary buffer. Its function is to minimize arcing of the vibrator contacts.

(3) Capacitors C227 and C228 and resistors R214 and R215 function as arc suppressors and also as the secondary buffers.

(4) Capacitors C230 and C231 are used to filter out rf hash in the 105-volt dc output.

151. Transmitter Start Circuit of Dynamotor-Power Supply DY–88/GRC–9
(fig. 104)

a. Transmitter Start Relay. When control Ⓔ is turned to the SEND position, transmitter start relay K202 is energized and contacts 11 and 12 close to apply power to dynamotor start relay K201. Voltage selector switch S202G (fig. 103) permits the relay to operate from a 6-, 12-, or 24-volt battery.

b. Dynamotor Start Circuit. Battery power is applied to the dynamotor through DYN. FUSE F201, the closed contacts of dynamotor start relay K201, and voltage selector switch S201. Voltage selector switches S201 and S202A permit operation from a 6-, 12-, or 24-volt battery.

152. Transmitter Plate and Screen Supply of Dynamotor-Power Supply DY–88/GRC–9
(figs. 103 and 104)

a. Closed contacts 5 and 6 of K202 apply battery power to the vibrator portion of the dynamotor power supply. The 105-volt output is applied through closed contacts 3 and 4 of K202 (contacts 2 and 3 now are open), terminal 21 of J202, and closed contacts 18 and 19 of keying relay K101 (fig. 67) to the receiver.

b. During send periods, keying relay K101 is energized, which causes contacts 18 and 19 to open and contacts 17 and 18 to close (fig. 92). This action transfers the 105 volts at 45 ma from all the receiver plate and screen circuits (except the last two audio stages) to the oscillator, doubler, and modulator stages in the transmitter.

c. Ordinarily, contacts 5 and 6 of K202 are shorted by the closed contacts 3 and 7 of receiver start relay K203 so that the 105-volt supply is operating continuously. Contacts 5 and 6 of K202 insure that 105 volts are available for the transmitter even though K203 is not energized, as would be the case if the receiver were inoperative.

d. The hv output from the dynamotor power supply is fed through terminal 32 of J202 and is applied to the pa plate when control Ⓔ is turned to the SEND position (fig. 94). No pa plate current flows until keying relay K101 is energized and contacts 9 and 10 close (fig. 92) to apply high voltage to the pa screen (fig. 91).

e. Capacitors C201 through C206 are used to eliminate rf noise. Capacitors C210, C211, and C212 reduce rf hash from the dynamotor, which might enter the battery cable and cause interference with other radio equipment. Capacitors C207, C208, and C209 and rf choke coil L201 are used to prevent radiation of rf energy and to reduce commutator ripple in the output voltage.

153. Transmitter Filament and Keying Relay Supply of Dynamotor-Power Supply DY–88/GRC–9
(fig. 104)

Depending on the voltage of the vehicle bat-

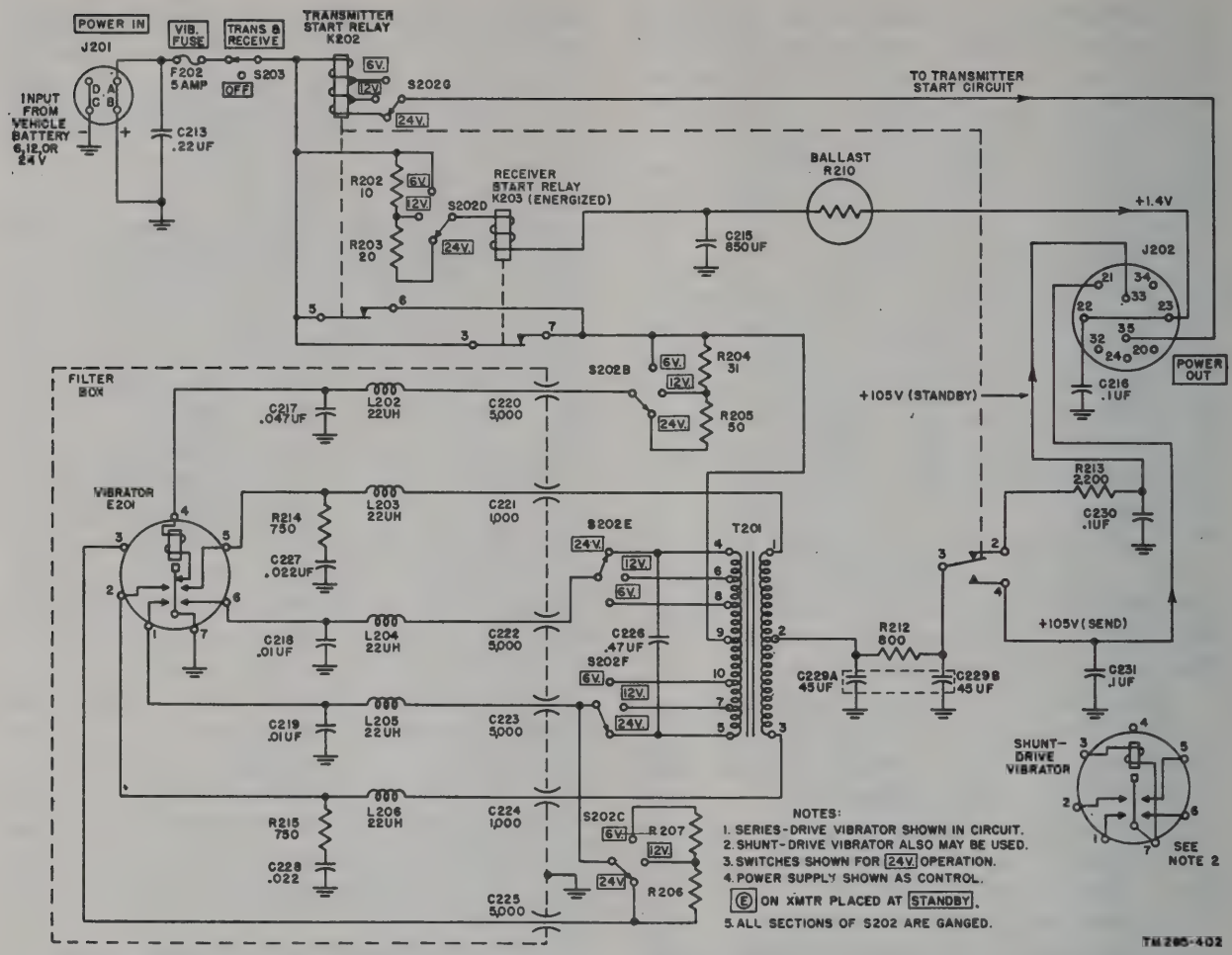

Figure 103. Dynamotor-Power Supply DY–88/GRC–9X vibrator and voltage selector switch S202, simplified schematic diagram.

tery, 12 volts are made available for the transmitter filament and keying relay circuits either directly from the battery or from the 12-volt output of dynamotor D201 (par. 154).

a. Transmitter Filament Supply. A regulated 6.3-volt dc output is fed to the transmitter filaments and overload relay K102B through terminal 20 of POWER OUT receptacle J202. Twelve volts are fed to the ballast tubes from the dynamotor or the vehicular battery. Ballasts R208 and R209 are thermal resistors used to drop and regulate the filament voltage at 6.3 volts. Ballasts R208 and R209 are normally connected in parallel through normally closed contacts 3 and 7 of relay K204. Transmitter filament control relay K204 is used as an additional precaution to prevent the application of excessive voltage to the transmitter filaments. When the radio set is placed in the PHONE-SEND position by controls Ⓓ and Ⓔ, no filament current is drawn until the push-to-talk button on the microphone or the key (figs. 88 and 89) is pressed. Under these conditions insufficient current is drawn through R208 and R209 to drop the 12 volts down to 6.3 volts as required by the transmitter filaments. The 12 volts energize K204 to open contacts 3 and 7. At the same time, contacts 3 and 5 close to connect R208, R209, and surge limiting resistor R211 in series to form a voltage divider. Reduced voltage for the transmitter filaments then is taken from the function of R208 and R209. When the push-to-talk button or the key is pressed and the transmitter filaments are energized, the voltage across the coil of relay K204 drops so that K204 is de-energized. Contacts

3 and 5 open and contacts 3 and 7 close again to connect the two ballasts in parallel.

b. Keying Relay Supply. The keying relay is supplied from terminal 34 of J202, Cord CD–1086, and terminal 45 on J102 (fig. 94). Twelve volts are fed to voltage-dropping resistor R201 from the dynamotor or the vehicle battery. Resistor R201 provides the necessary voltage drop so that 6.3 volts are supplied to keying relay K101 when it is energized.

154. Dynamotor D201 (fig. 104)

a. Dynamotor D201 furnishes hv dc power to the plate and screen circuits of tubes V102 and V103 in the transmitter and lv dc power to the transmitter filaments, overloading relay and keying relay. A switching arrangement in the power supply permits operation from a 6-, 12-, or 24-volt storage battery while still maintaining the same output voltages.

b. The dynamotor is essentially a motor and a generator that operates from a common magnetic field. It has one armature which includes four windings and four commutators. Three lv windings are connected in series to form the motor section of the dynamotor armature. Two of the windings are 6-volt windings; the third is a 12-volt winding. For 6-volt operation, one 6-volt winding is used as the motor portion of the dynamotor; for 12-volt operation, the two 6-volt windings are connected in series; for 24-volt operation, all three windings are connected in series. The fourth winding is the hv section of the armature and furnishes 580 volts for the transmitter plate and screen circuits of V102 and V103. The armature and its four windings revolve on a common shaft in a common magnetic field. The shaft is mounted on ball bearings to provide free rotation. The voltage across each of the armatures is proportional to the voltage for which each armature is designed to operate. This is true because a motor, when driven by another motor, will act as a generator, when its field is excited.

c. All armatures have a common field, so that any non-excited armature acts as a generator. Thus, when S201 is in the 6-volt position, the first 6-volt armature acts as a motor and the second 6-volt armature acts as a generator and will produce approximately 6 volts that will add to the battery voltage to make approximately 12 volts dc. Likewise, when switch S201 is in the 24-volt position, the voltage across the two 6-volt armatures in series will be approximately 12 volts because of the voltage dividing action of motors connected in series. Therefore, with S201 in any position (6, 12, or 24 volts), the voltage across the two 6-volt windings of the dynamotor always will be approximately 12 volts. This characteristic provides a convenient source of voltage that can be reduced by means of ballast tubes R208 and R209 in parallel to 6.3 volts for the transmitter filaments (par. 153) even though the battery of the vehicle may be above or below this voltage. Therefore, because of the regulating action of the dynamotor on 6 volts and on 24 volts and because of the regulating action of the ballast tubes, the transmitter filaments are assured of the well-regulated voltage that their filaments require. On 12-volt operation, the filament circuit is connected directly to the battery.

d. When dc voltage is applied to the dynamotor, current flows through the field coils and the lv armature windings. This current sets up magnetic fields in both the field and armature windings that are opposite in polarity, causing the armature to rotate. Because the hv winding is wound on the same armature, it cuts the lines of the common magnetic field, generating an alternating voltage which is converted to the 580- volt dc voltage by the commutator. This voltage then is picked up from the commutator by a set of brushes. From the brushes, the high voltage passes through a filter circuit composed of capacitors C207, C209, and C208 and choke L201. The brushes and commutators on the lv windings are used to transfer the dc voltages from the battery to the windings. The field is compound wound; that is, part of the field winding is in series and part in shunt with the armature windings. This type of winding provides high starting torque and quick acceleration besides giving fairly constant output and speed for various loads.

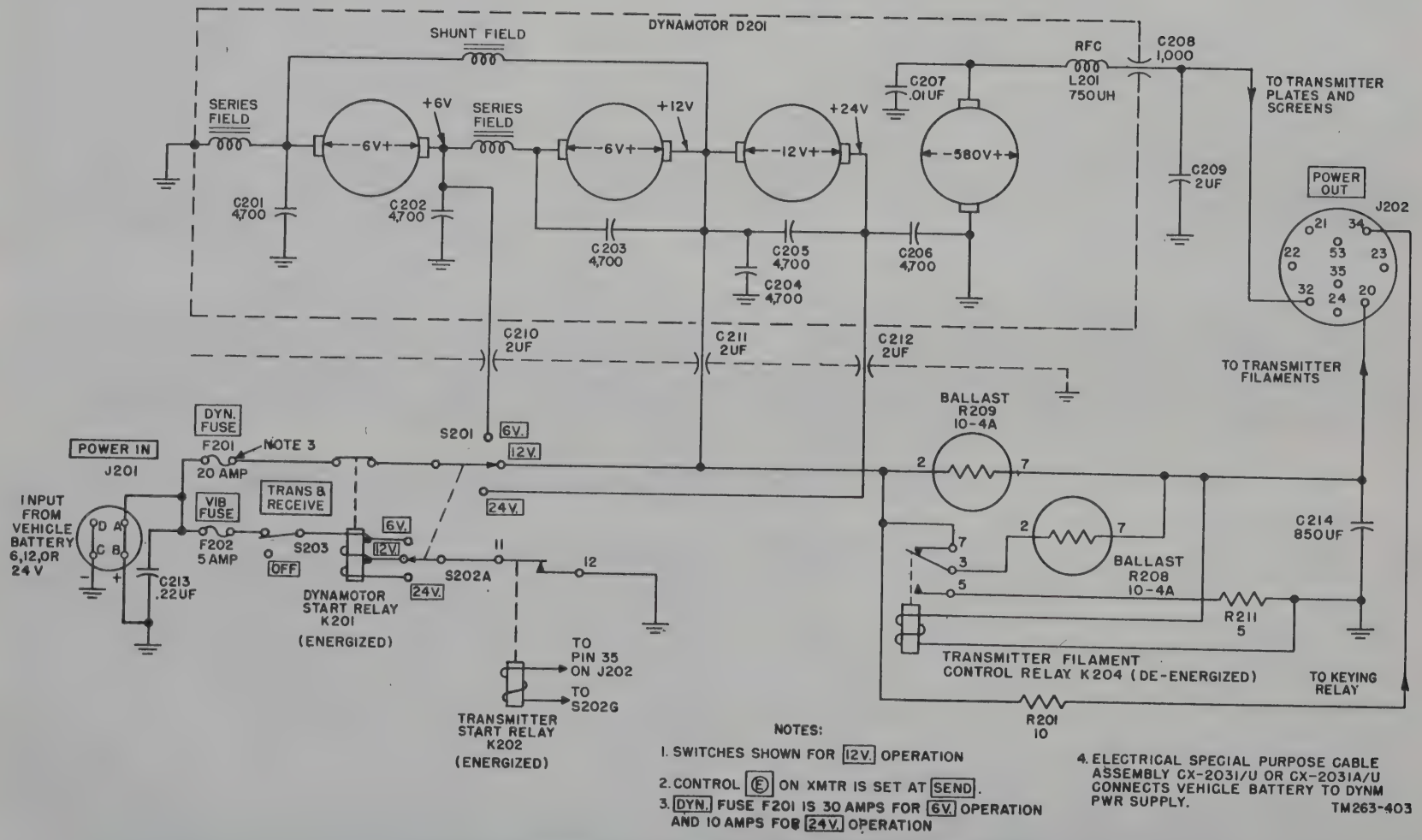

Figure 104. Dynamotor-Power Supply DY–88/GRC–9 dynamotor circuit.

155. General

Dynamotor-Power Supply DY–105/GRC–9X is designed to convert a 24-volt dc input from a vehicular storage battery into the necessary operating voltages for the receiver-transmitter. The dynamotor power supply consists of a dynamotor, a synchronous (self-rectifying) vibrator, and various regulatory and control elements. To control the operation of Dynamotor-Power Supply DY–105/GRC–9X from Receiver-Transmitter RT–77(*)/GRC–9, the TRANS RECEIVE-OFF switch on the dynamotor power supply first must be turned to TRANS RECEIVE. The dynamotor (D1) operates when either the receiver and the transmitter is in operation, and when the OFF-SEND-STANDBY switch control Ⓔ, on the receiver-transmitter is turned to SEND. When control Ⓔ is turned to STANDBY, the dynamotor does not operate and the receiver is supplied from the lv vibrator circuits in the dynamotor power supply. Thus, the battery is not drained excessively during prolonged periods of listening.

156. Block Diagram of Dynamotor-Power Supply DY–105/GRC–9X (fig. 105)

a. Receiver Start Circuit. With control Ⓔ at either SEND or STANDBY and switch S1 in the TRANS RECEIVE position, receiver start relay K1 is energized and the receiver filaments obtain their voltage from the dynamotor power supply. Ballast resistor RT3 drops the battery voltage to the proper filament operating voltage. When relay K1 is energized, contacts 3 and 2 close to provide power to the vibrator circuits, which step up the low battery voltage to a higher dc voltage (par. 158). The output of transformer T1 is fed through a filter network to the plate and screen circuits of the receiver-transmitter (except V103).

b. Transmitter Start Circuit. Dynamotor start relay K2 is energized when control Ⓔ, is turned to the SEND position. When K2 is energized, contacts 4 and 5 close, applying the battery voltage to the lv winding in the dynamotor. In effect, the dynamotor operates as a dc transformer, which steps up the low battery voltage to the high voltage necessary for operation of the transmitter. The hv output from the dynamotor is fed (through a filter) to the plates and screens of the transmitter tubes V102 and V103. During send periods, the transmitter filaments and keying relay K101 receive their operating voltages from the dynamotor power supply (par. 161). The battery voltage (24 volts) is fed through voltage-dropping resistor R9 to the keying relay circuits and is also fed through two ballast resistors in parallel to the transmitter filaments.

c. Overvoltage Protect Circuit. The 6.3-volt transmitter filament circuit includes a voltage limiting circuit which prevents the output voltage from rising to an abnormally high value when the transmitter filaments are not drawing current. When the output voltage rises to a higher than normal value (6.3 volts), filament control relay K3 is energized and its contacts connect the two ballast tubes and resistor R7 in series to form a voltage divider. The output voltage then is taken from a tap on the divider, thus protecting the transmitter from excessive filament voltage (par. 161).

157. Receiver Filament Supply of Dynamotor-Power Supply DY–105/GRC–9X (fig. 106)

a. When control Ⓔ is set in the SEND or STANDBY position, 1.4-volts dc is supplied to the filaments of the receiver tubes. Capacitor C1 acts as an rf bypass which prevents any rf hash generated in the power supply from entering other equipment through the power input cable.

b. The battery voltage is fed through VIB. FUSE F2, switch S1 in the TRANS RECEIVE position, dropping resistors R1 and R2, and fed to receiver start relay K1. The circuit is completed through the coil of relay K1, ballast RT3, receptacles J1 and J2 of the receiver-transmitter, switch S103C (fig. 94), and the receiver filaments to ground. The current that flows in this circuit energizes K1. Capacitors C14 and C17 act to eliminate any ripple voltage.

c. Ballast tube RT3 is a thermal resistor in series with the receiver filament supply. It acts as a voltage regulator, maintaining a constant

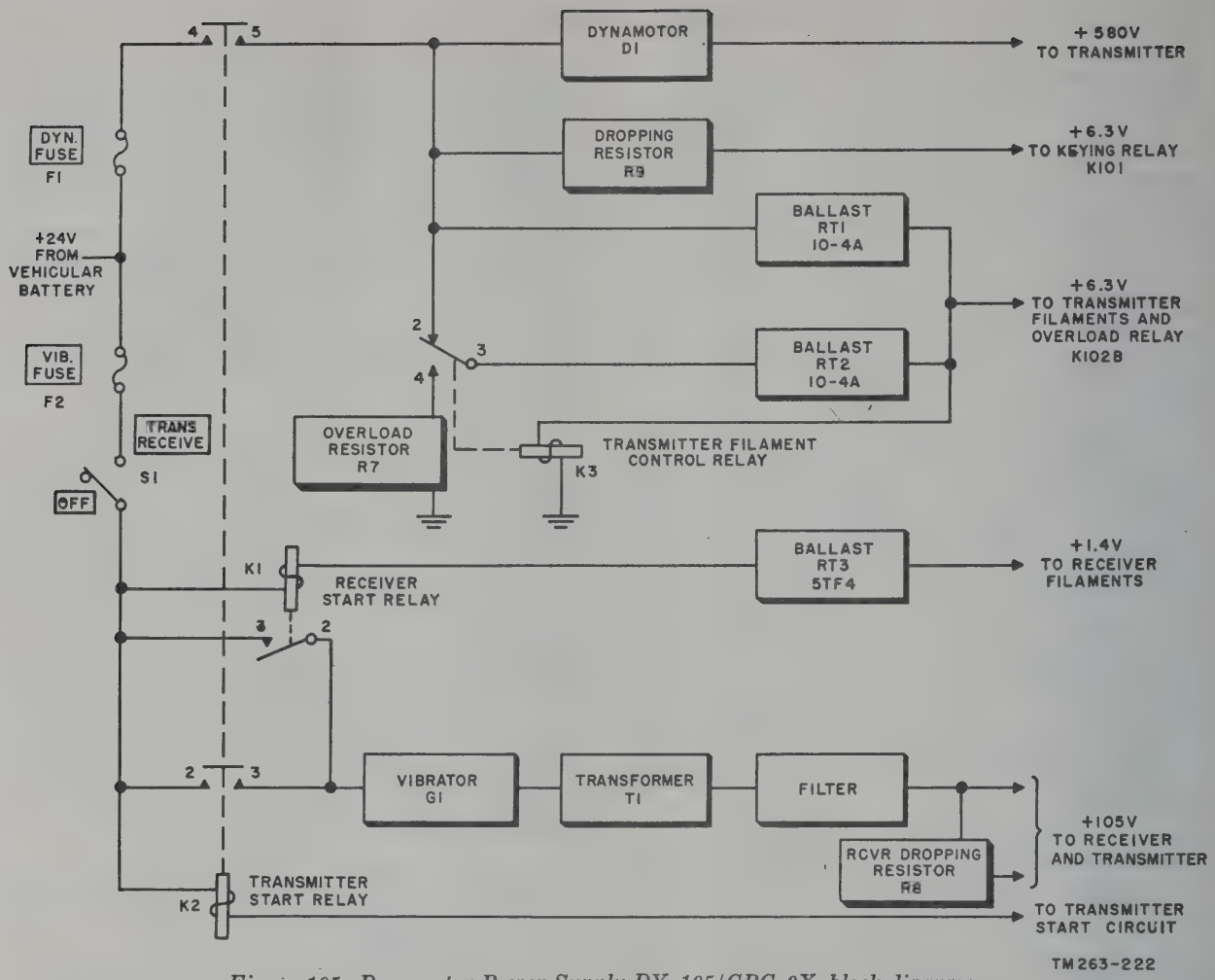

Figure 105. Dynamotor-Power Supply DY–105/GRC–9X, block diagram.

voltage output for the receiver filaments under conditions of varying input voltage.

d. Referring to figure 94, when control Ⓔ is in the STANDBY position, the receiver filaments obtain their power through terminals 22 or 23 of J2. When control Ⓔ is in the SEND position, the receiver filaments also obtain their power through terminal 22 and 23 of J2.

158. Receiver Plate and Screen Supply of Dynamotor-Power Supply DY–105/GRC–9X (fig. 106)

a. Synchronous vibrator G1 and transformer T1 are used to supply 105 volts dc at 17 ma to the receiver plate and screen circuits during standby periods, and 105 volts dc at 45 ma to the plate and screen circuits of V5 and V6 in the receiver (fig. 67) and to the transmitter oscillator, doubler, and modulator plates and screens during send periods (fig. 91).

b. Receiver start relay K1 is energized when control Ⓔ is at the SEND or STANDBY position (par. 157). Battery current passes through closed contacts 3 and 2 of K1, or 2 and 3 of K2, or both, to the center tap (terminal 2) of transformer T1 and to the vibrator coil.

c. Vibrator G1 is a shunt-drive type vibrator, The principles of operation are identical to that given in paragraph 150*c*(3). The circuit differences are as follows:

(1) Transformer T1 is referred to in place of T201.
(2) Primary terminals 1, 2, and 3 on T1 correspond to terminals 5, 9, and 4 on T201, respectively.
(3) Coils L2 and L4 are referred to coils L202 and L206, respectively.

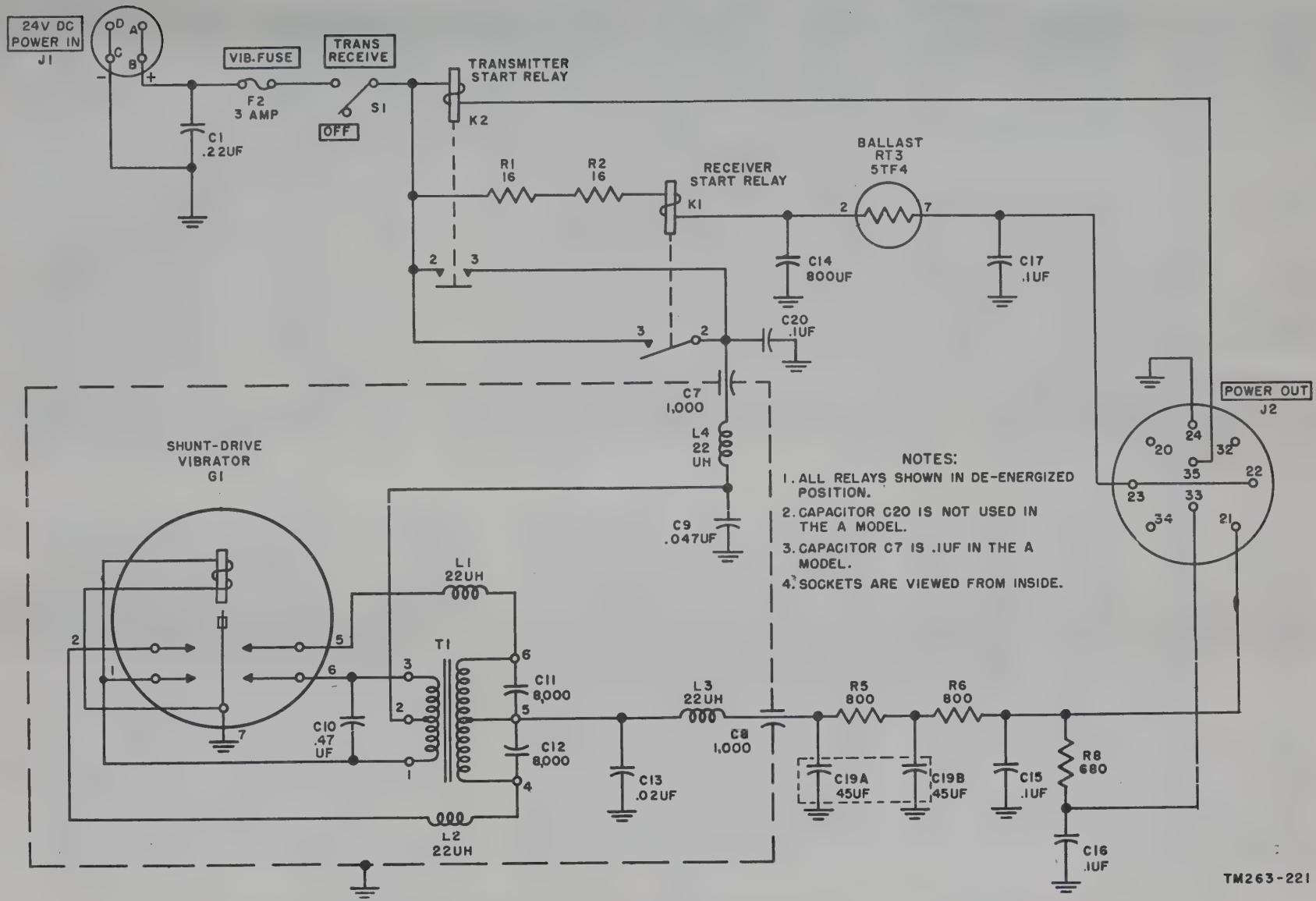

Figure 106. Dynamotor-Power Supply DY–105/GRC–9X, vibrator, transmitter start, and receiver filament circuit.

(4) The voltage select switch is not required on the 24-volt dynamotor power supply; coil L4 connects directly to relay K1.

(5) Receiver start relay K1 is referred to K203 and transmitter start relay K2 is referred to K202.

(6) Contacts 2 and 3 on K1 correspond to contacts 7 and 3 of K203 and contacts 3 and 2 on K2 correspond to contacts 6 and 5 on K202.

d. The rectifier circuit is also identical to that of the 6-, 12-, 12-volt dynamotor as described in paragraph 150*c*(2) except for the terminal numbers on the transformers. Terminals 4, 5, and 6 on T1 correspond to terminals 3, 2, and 1 on T201.

e. The rectified output from T1 is filtered by resistors R5 and R6 and capacitors C19A and C19B. During standby operation, the output is fed through voltage-dropping resistor R8. The 105 volts dc at 17 ma is then fed through terminal 33 on POWER OUTPUT receptacle J2, through Cord CD–1086 to terminal 57 on receiver-transmitter POWER receptacle J102 (fig. 94). With control Ⓔ set at SEND, the filtered output is fed through terminal 21 on J2 to terminal 58 on J102 (figs. 67 and 91). Dropping resistor R8 is not used during send operation as more current is drawn from the 105-volt supply than in standby operation. Thus, the required output voltage is maintained.

f. In the explanation of the receiver plate and screen supply circuits, several circuit elements were omitted. This was done to clarify essential points of operation. The functions of these elements are explained below.

(1) Filter chokes L1 through L4 and rf filter capacitors C7, C20, and C8 are used for elimination of hash interference caused by the vibrator contacts.

(2) Capacitor C10 is the primary buffer. Its function is to minimize arcing of the vibrator contacts and also to produce the correct wave form for efficient operation of T1.

(3) Capacitors C11 and C12 function as arc suppressors and also as the secondary buffers.

(4) Capacitors C15 and C16 are used to filter out rf hash in the 105-volt dc output.

159. Transmitter Start Circuit of Dynamotor-Power Supply DY–105/GRC–9X (fig. 107)

a. When control Ⓔ is turned to SEND and S1 is set at TRANS RECEIVE, transmitter start relay K2 is energized and contacts 4 and 5 close. Battery power is applied to the dynamotor D1 through DYN. FUSE F1 and the closed contacts of transmitter start relay K2.

b. The transmitter start circuit is completed to ground from K2, terminal 35 on J2, through Cord CD–1086, terminal 55 on J102, and by S103B (fig. 94).

160. Transmitter Plate and Screen Supply of Dynamotor-Power Supply DY–105/GRC–9X

a. Closed contacts 2 and 3 of K2 apply battery power to the vibrator section of the dynamotor power supply (fig. 106). The 105-volt output is applied to the transmitter through terminal 21 of J2, terminal 57 on J102 (fig. 94), and closed contacts of keying relay K101.

b. During send periods, relay K101 is energized, which causes contacts 18 and 19 to open and contacts 17 and 18 to close. This action transfers the 105 volts at 45 ma from the receiver section to the oscillator, doubler, and modulator stages in the transmitter section (par. 117).

c. Ordinarily, contacts 2 and 3 of K2 are shorted by closed contacts 3 and 2 of receiver start relay K1 so that the 105-volt supply is operating continuously. Contacts 2 and 3 of K2 insure that 105 volts are available for the transmitter even though K1 is not energized, as would be the case if the receiver were inoperative.

d. The hv output from the dynamotor power supply is fed through terminal 32 of J2 (fig. 107) to terminal 47 of J102 and is applied to the pa plate when control Ⓔ is turned to the SEND position (fig. 94). No pa plate current flows until keying relay K101 and screen cutout relay K102A are energized to close contacts 4 and 5 (on K102A) and 9 and 10 (on K101) to

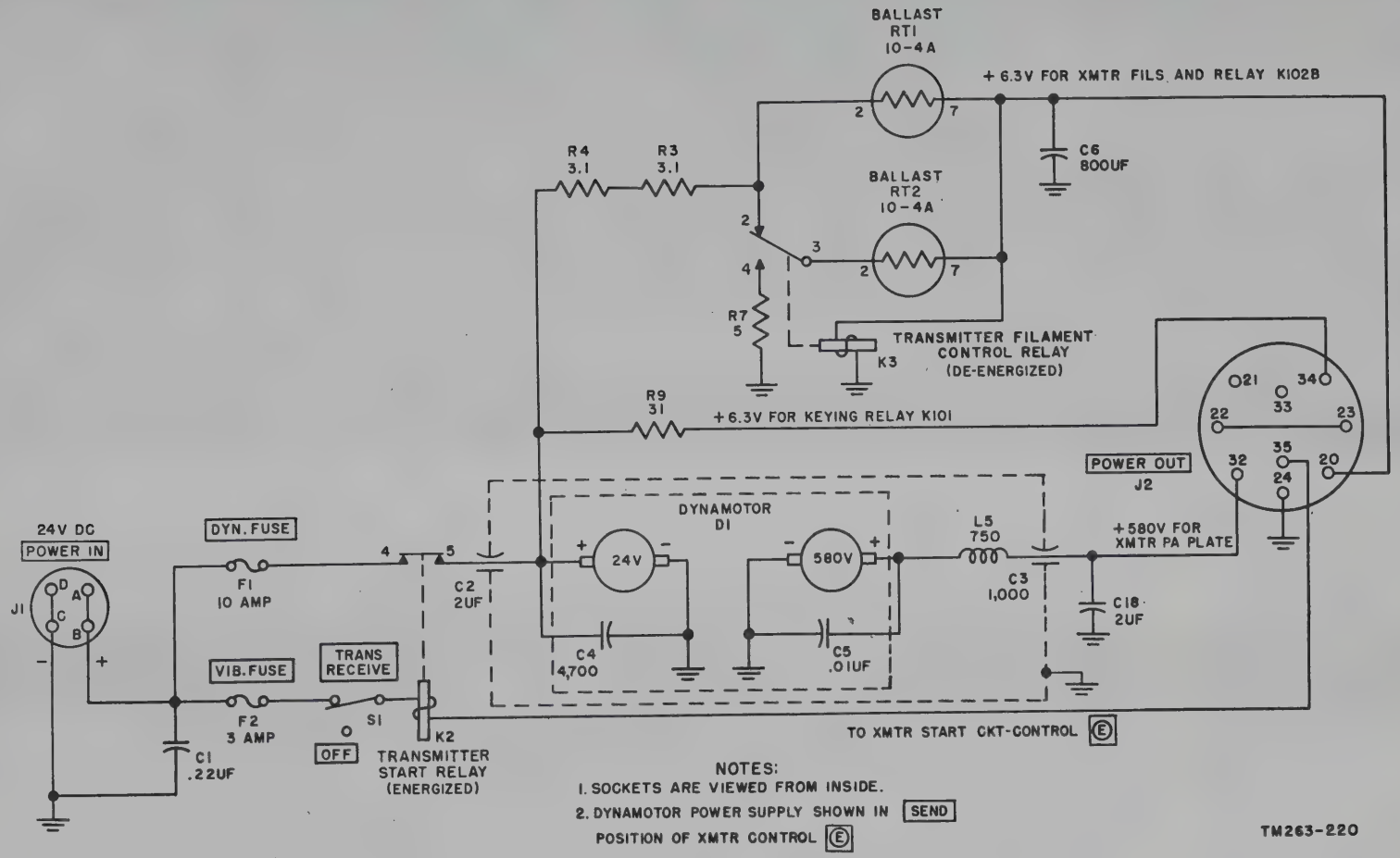

Figure 107. Dynamotor-Power Supply DY–105/GRC–9X, dynamotor circuit.

apply voltage to the screen grid of pa tube V103 (fig. 91).

e. Capacitors C4 and C5 are used to eliminate rf noise (fig. 107). Capacitor C2 reduces rf hash from the dynamotor, which might enter the battery cable and cause interference with other radio equipment. Capacitors C3 and C18 and rf choke coil L5 prevent radiation of rf energy and reduce commutator ripple in the output voltage.

161. Transmitter Filament Supply and Keying Relay Supplies of Dynamotor-Power SUPPLY DY–105/GRC–9X (fig. 107)

a. Transmitter Filament Supply. A regulated 6.3-volt dc output is fed to the transmitter filaments and overload relay K102B through terminal 20 of output receptacle J2, Cord CD–1086, terminal 54 on J102, and S103A (fig. 94). The 24-volt battery potential is fed through dropping resistors R4 and R3 and to the ballast tubes. Ballasts RT1 and RT2 are thermal resistors used to regulate the filament voltage at 6.3 volts, and are normally connected in parallel through normally closed contacts 2 and 3 of relay K3. Transmitter filament control relay K3 is used as an additional precaution to prevent the application of excessive voltage to the transmitter filaments. When control Ⓔ is set in the SEND position and control Ⓓ is set at PHONE, no transmitter filament current is drawn until the push-to-talk button on the microphone or the key is pressed. Under these conditions, insufficient current is drawn through ballasts RT2 and RT1 to drop the voltage down to 6.3 volts as required by the transmitter filaments. If the voltage becomes excessive, K3 is energized and contacts 2 and 3 open. At the same time, contacts 3 and 4 close to connect RT1, RT2, and surge limiting resistor R7 in series to form a voltage divider. Reduced voltage for the transmitter filaments then is taken from the junction of RT1 and RT2. When push-to-talk button or key is pressed and the transmitter filaments are energized, the voltage across the coil of relay K3 drops so that K3 is de-energized. Contacts 3 and 4 open and contacts 2 and 3 close again to connect the two ballasts in parallel.

b. Keying Relay Supply of Dynamotor-Power Supply DY–105/GRC–9X. The keying relay is supplied from terminal 34 of J2, through Cord CD–1086, and pin 45 on J102 (fig. 94). The 24-volt battery potential is fed to voltage-dropping resistor R9. Resistor R9 provides the necessary voltage drop so that 6.3 volts are supplied to keying relay K101 when it is energized.

162. Dynamotor D1 (fig. 107)

a. Dynamotor D1 furnishes high-voltage dc power to the plate and screen circuits of the transmitter.

b. The dynamotor consists of a motor and generator, operating from a common magnetic field. The armature contains two windings and two commutators, mounted on a common shaft. The shaft is mounted on ball bearings to provide free rotation. The low voltage windings form the motor section of the dynamotor armature. The high-voltage winding furnishes 580 volts for the transmitter plate and screen circuits.

c. When dc voltage is applied to the dynamotor, current flows through the field coils and lv armature windings. This current sets up magnetic fields in both the field and armature windings that are opposite in polarity, causing the armature to rotate. Since the hv winding is wound on the same armature it cuts the lines of the common magnetic field and generates an ac voltage, which is converted by the commutator to 580 volts dc. This voltage then is picked up from the commutator by a set of brushes and is passed through a filter circuit composed of capacitors C5 and C3 and choke L5. The brushes and commutator on the lv winding are used to transfer the dc voltage from the battery to the winding.

CHAPTER 6
FIELD MAINTENANCE

Note. This chapter contains information for field maintenance. The amount of repair that can be performed by units having field maintenance responsibility is limited only by the tools and equipment available, and by the skill of the repairman.

Section I. TROUBLESHOOTING AT FIELD MAINTENANCE LEVEL

Warning: When servicing Radio Set AN/GRC–9(*), be careful of the high voltages exposed. Always disconnect the source of power to the unit before disassembling or testing. For the receiver-transmitter, always pull out the plugs of Cords CD–1086 and CD–1119. If the voltage to be measured is greater than 300 volts (such as the plate cap of tube type 2E22), temporarily ground the terminal to drain off any accumulated charge, then remove the ground from the terminal, connect the positive and negative test leads, step away from the voltmeter, turn on the power, and note the reading on the voltmeter. Do not touch any part of the voltmeter, particularly when it is necessary to measure the voltage between two points above ground.

163. Troubleshooting Procedures

The first step in servicing a defective radio set is to sectionalize the fault. Sectionalization means tracing the fault to the *major component or circuit* responsible for the abnormal operation of the set. The second step is to localize the fault. Localization means tracing the fault to the defective *part* responsible for the abnormal condition. Some faults such as burned-out resistors, rf arcing, and shorted transformers often can be located by sight, smell, and sound. The majority of faults, however, must be localized by *checking voltage and resistance.*

a. System Sectionalization. System sectionalization is described in paragraph 80.

b. Component Sectionalization and Localization. The tests listed below aid in isolating the source of trouble. Follow the procedures in the order given below. The servicing procedure should cause no further damage to the radio set. First, trouble should be localized to a single stage or circuit; then the trouble may be isolated within that stage or circuit by appropriate voltage, resistance, and continuity measurements. The service procedure is summarized as follows:

(1) *Visual inspection.* The purpose of visual inspection (par. 79) is to locate any visible trouble. Through this inspection alone, the repairman may frequently discover the trouble or determine the stage in which the trouble exists. This inspection is valuable in avoiding additional damage to the radio set that might occur through improper servicing methods and in forestalling future failures.

(2) *Input resistance measurements.* These measurements (par. 174) prevent further damage to the radio set from possible short circuits. Because this test gives an indication of the condition of the filter circuits, its function is more than preventive.

(3) *Operational test.* The operational test (par. 168) is important because it frequently indicates the general location of trouble. In many instances the information gained will determine the exact nature of the fault. To utilize this information fully, all symptoms must be interpreted in relation to one another.

(4) *Troubleshooting chart.* The trouble symptoms listed in this chart (par.

169) will aid greatly in localizing trouble.

(5) *Signal substitution.* The principal advantage of the signal substitution method (par. 175) is that it usually enables the repairman to localize a trouble accurately and quickly to a given stage when the general location of the trouble is not immediately evident from the above tests.

(6) *Intermittents.* In all these tests, the possibility of intermittents should not be overlooked. If present, this type often may be made to appear by tapping or jarring the set. It is possible that the trouble is not in the radio set, but in the installation (mounting, cabling system, or vehicle), or the trouble may be caused by external conditions. In this event, test the installation if possible.

164. Troubleshooting Data

The material supplied in this manual will help in the rapid location of faults. Consult the following troubleshooting data:

a. Receiver Section.

Fig.	Par.	Description
54		Internal wiring diagrams of cords.
56		Antenna switching circuit of receiver.
59		Band changing circuit, simplified schematic diagram.
65		Operation switch S3, simplified schematic diagram.
66		Receiver filament circuit.
67		Receiver plate and screen B+ circuit.
108		Receiver power receptacle J3 and IMPEDENCE switch S4 resistances to ground.
109		Transmitter power socket resistances to ground.
110		Receiver top, parts location.
111		Receiver transformer and electrolytic capacitor terminal designations.
112		Receiver bottom, parts location.
113		Receiver bottom, parts location.
114		Receiver bottom, parts location.
115		Receiver tube socket, voltage and resistance diagram.
116		Location of wafer sections of switch S3.
175		Receiver section, schematic diagram.
	174	Resistances of receiver transformers and coils.

b. Transmitter Section.

Fig.	Par.	Description
71		Mo (self-excited), switch sections S-101A, S101B, and S101G, simplified schematic diagram.
72		Mo (self-excited), switch sections S-101C, S101D, S101E, and S101F, simplified schematic diagram.
73		Mo (crystal-controlled), switch sections S101D and S101E.
75		Doubler switch sections S101H, S101I, and S101J, simplified schematic diagram.
77		Pa switch sections S101K, S101L, and S101M, simplified schematic diagram.
78		LO power position of switch S105–1, simplified schematic diagram.
79		HI power position of switch S105–2, simplified schematic diagram.
80		Screen grid protective circuit, simplified schematic diagram.
81		Antenna switching and tuning circuit.
82		Switch S102, positions 1 through 4.
83		Switch S102, positions 5 through 8.
84		Switch S102, positions 9 through 11.
87		Sidetone switching circuit, simplified schematic diagram.
88		Modulation positions of S105, simplified schematic diagram.
89		Microphone and key connections.
91		Transmitter plate and screen circuits.
92		Relay K101 contacts.
93		Meter socket X110 connections.
94		OFF-SEND-STANDBY switch, control Ⓔ.
117		Transmitter capacitor and dial retaining screws.
118		Location of screws A and B.
119		Back panel of transmitter shown swung up to expose tuning capacitor.
120		Transmitter parts location (top).
121		Transmitter parts location (bottom).
122		Transmitter parts location (bottom).
123		Transformer pin designation on transmitter.
124		Transmitter tube socket voltage and resistance diagram.
125		Transmitter wafer switch sections.
167		Microphone T–17, schematic diagram.
176		Transmitter section, schematic diagram.
	182	Resistance of transmitter coils and transformers.

c. Generator GN–58–(*).

Fig.	Par.	Description
126		Generator GN–58–(*), top cover removed.

Fig.	Par.	Description
127		Generator GN–58–A, bottom half of housing removed.
128		Generator GN–58–A, parts location (front).
129		Generator GN–58–A, parts location (rear).
168		Generator GN–58, schematic diagram.
169		Generator GN–58–A (early models), schematic diagram.
170		Generator GN–58–A (late models), schematic diagram.
	186	Resistances of generator choke coils.

d. Vibrator Power Supply PE–237.

Fig.	Description
130	Vibrator Power Supply PE–237, terminal board and battery cable connections.
133	Vibrator Power Supply PE–237 (later models), top view for parts identification purposes.
134	Vibrator Power Supply PE–237 (early models), top view for parts identification purposes.
135	Vibrator Power Supply PE–237 (later models), bottom view for parts identification purposes.
136	Vibrator Power Supply PE–237 (early models), bottom view for parts identification purposes.
137	Shielded compartment for standby vibrator socket and filter unit, viewed from bottom of chassis.
138	Shielded compartment for hv vibrator socket and filter unit, viewed from bottom of chassis.
139	Inside view of door cover for hv filter compartment.
140	Vibrator Power Supply PE–237, transformer and choke coil terminal designations.
171	Vibrator Power Supply PE–237 (early models), schematic diagram.
172	Vibrator Power Supply PE–237 (late models), schematic diagram.

e. Dynamotor-Power Supply DY–88/GRC–9.

Fig.	Par.	Description
102		Dynamotor-Power Supply DY–88/GRC–9, functional diagram.
103		Dynamotor-Power Supply DY–88/GRC–9X vibrator and voltage selector switch S203, simplified schematic diagram.
104		Dynamotor-Power Supply DY–88/GRC–9, dynamotor circuit.
141		Dynamotor-Power Supply DY–88/GRC–9, top view of chassis.
142		Dynamotor-Power Supply DY–88/GRC–9, bottom view of chassis with filter box cover removed.
143		Dynamotor-Power Supply DY–88/GRC–9, rear view of chassis showing location of relays.
144		Dynamotor D201, covers removed, bottom view.
150		Dynamotor D201, brush replacement.
151		Dynamotor D201, brush replacement.
156		Typical dynamotor D201, exploded view.
173		Dynamotor-Power Supply DY–88/GRC–9, schematic diagram.
	192	Resistances of power transformer and relay coils for Dynamotor-Power Supply DY–88/GRC–9.

f. Dynamotor-Power Supply DY–105/GRC–9X.

Fig.	Par.	Description
105		Dynamotor-Power Supply DY–105/GRC–9X, block diagram.
106		Dynamotor-Power Supply DY–105/GRC–9X vibrator, transmitter start, and receiver filament circuit.
107		Dynamotor-Power Supply DY–105/GRC–9X, dynamotor circuit.
145		Dynamotor-Power Supply DY–105/GRC–9X, top view of chassis.
146		Dynamotor-Power Supply DY–105/GRC–9X, bottom view of chassis with filter box cover removed.
147		Dynamotor D1, with end covers removed.
174		Dynamotor-Power Supply DY–105/GRC–9X, schematic diagram.
	195	Resistances of power transformer and relay coils for Dynamotor-Power Supply DY–105/GRC–9X.

165. Test Equipment Required for Troubleshooting

The test equipment required for troubleshooting the radio set is listed below. The technical manuals and the common names for the test equipment are also given.

Test equipment	Technical manual	Common name
Electron Tube Test Set TV–7/U.	TM 11–5083	Tube tester.
Multimeter TS–352/U.	TM 11–5527	Multimeter.
Electronic Multimeter TS–505/U.	TM 11–5511	Vtvm.

166. General Precautions

When servicing the receiver-transmitter, observe the following precautions carefully:

a. Be careful when the cover is removed; dangerous voltages are exposed.

b. Careless replacement of parts often makes new faults inevitable. Note the following points:

(1) Before a part is unsoldered, note the position of the leads. If the part, such as a transformer, has a number of connections, tag each of the leads to it.

(2) Do not allow drops of solder to fall into the set; this may cause short circuits.

(3) When a part is replaced in rf or if. circuits, it must be placed exactly as the original one was. A part that has the same electrical value but different physical size may cause trouble in hf circuits. Give particular attention to proper grounding when replacing a part. Use the same ground as in the original wiring. Failure to observe these precautions may result in decreased gain or possible in oscillation of the circuit.

(4) Do not disturb the adjustment of calibration control C102.

(5) Avoid displacing any leads when getting at a particular component. If it is unavoidable, move the lead, but replace it in its original position after the faulty component has been replaced.

Warning: The failure of selenium rectifiers can result in the liberation of poisonous fumes and the deposit of poisonous selenium compounds. If a rectifier burns out or arcs over, the odor is strong. Provide adequate ventilation immediately. *Avoid inhaling the fumes and do not handle the damaged rectifier until it has cooled.*

167. Checking Filament and B Circuits for Shorts in the Receiver-transmitter

Trouble within the receiver-transmitter often may be detected by checking the resistance of the filament and hv circuits before applying power to the equipment. This will prevent damage to the power supply. Make the following checks before attempting to put the receiver-tranmitter into operation.

a. Receiver Filament and Place Circuits (figs. 66 and 67). Remove the receiver-transmitter interconnecting cable from the socket in back of the receiver chassis. The resistance to be obtained between ground and terminals 3, 4, and 6 are shown in figure 108. The reading between ground and terminal 6 will be obtained only if a headset is plugged in J1 or J2. If the headset is not plugged in, the reading from ground to terminal 6 will be infinite. If these readings are not obtained, *do not* apply power to the radio set, but trace the circuits to see where the shorts or opens are located. If this is not done, the power supply may be damaged.

b. Transmitter Power Supply Circuits (figs. 90 and 91). Disconnect power cables, Cords CD–1086 and CD–119, from the transmitter and remove the key and microphone from their jacks. Check the resistances to ground of the contacts of the transmitter POWER socket (fig. 109). If the readings shown are not obtained, *do not* apply power to the radio set; trace the circuits to see where the trouble is located. Otherwise, damage may be done to the power

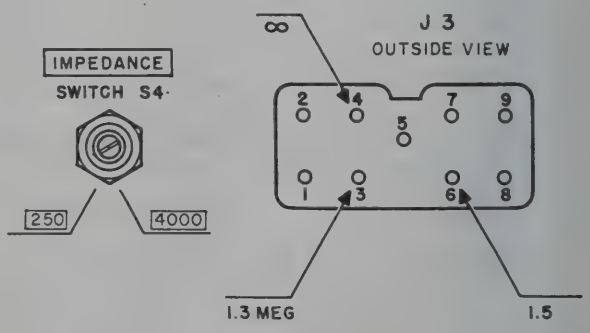

Figure 108. Receiver power receptacle J3 and IMPEDANCE switch S4 resistances to ground.

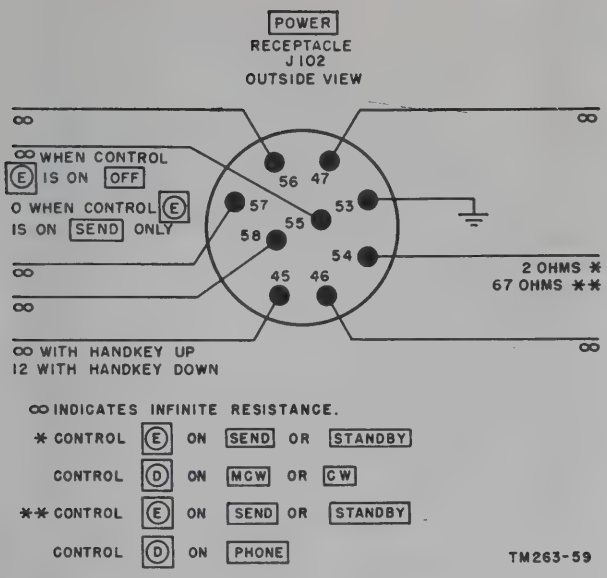

Figure 109. Transmitter POWER socket resistances to ground.

supply. Correct all conditions leading to abnormal readings before applying power to the radio set.

168. Operational Test

If the tests in paragraph 167 have not shown any abnormal readings, connect the power supply to the radio set and set up the unit for normal operation. Refer to the equipment performance checklist in paragraph 83 and operate the set as described in the checklist. This procedure is important because it frequently indicates the general location of trouble. Also listen for crackling or buzzing noises that indicate hv arcing.

169. Troubleshooting Charts

The troubleshooting charts indicated in *a* through *k* below are supplied as an aid in locating trouble in the equipment.

a. The chart in paragraph 170 covers sectionalizing trouble in Radio Set AN/GRC–9(*); it lists the various symptoms that may be easily recognized and gives the probable location of the existing trouble as well as the recommended correction. The chart also tells the repairman if the trouble is in the transmitter section, receiver section, power supply, or antenna. By proper use of the charts, the repairman can readily recognize troubles that may occur in the components of the equipment.

b. The chart in paragraph 171 covers sectionalizing trouble in the receiver section of the receiver-transmitter. This chart will aid in determining which stage in the receiver section is at fault.

c. The chart in paragraph 172 is to be used to localize trouble in the receiver section to an individual *part* within the faulty stage.

d. The chart in paragraph 179 is similar to paragraph 171, except that it deals with sectionalizing trouble in the transmitter section of the radio set.

e. The chart in paragraph 180 localizes the trouble in the transmitter section to an individual part *within* the faulty stage.

f. The chart in paragraph 183 sectionalizes trouble in the generator power supply.

g. The chart in paragraph 185 localizes trouble in the generator power supply.

h. The chart in paragraph 187 sectionalizes trouble in the vibrator power supply.

i. The chart in paragraph 189 localizes trouble in the vibrator power supply.

j. The chart in paragraph 191 is used to trouble shoot Dynamotor-Power Supply DY–88/GRC–9.

k. The chart in paragraph 194 is used to trouble shoot Dynamotor-Power Supply DY–105/GRC–9X.

170. Sectionalizing Trouble in Radio Set AN/GRC–9(*)

Symptom	Probable trouble	Correction
1. All controls are in correct position for operation of receiver and transmitter, but neither operates. Dial lights do not light.	*a.* Cord CD–1086 is defective. *b.* Power supply is defective. *c.* If only transmitter panel light works, and Generator GN–58–(*) is being used without Battery BA–48, control Ⓔ may not be on SEND.	*a.* Replace Cord CD–1086. *b.* See charts for power supplies. *c.* Turn control Ⓔ to SEND.

Symptom	Probable trouble	Correction
2. Transmitter is normal. Receiver does not operate.	*a.* Headset plug is not fully inserted in PHONES jack.	*a.* Push in headset plug.
	b. Open circuit in headset.	*b.* Replace headset; repair defective unit.
	c. Open or shorted interconnecting cable between transmitter and receiver.	*c.* Remove receiver-transmitter from the case and check the cable.
	d. If a hum, but no signal, is heard in the headset, touch the antenna lead-in to lug 8 of the RECEIVER POWER SOCKET in back of the receiver chassis. If still no signal is heard, the receiver requires major repairs. If the signal is heard, the components associated with the receiver that are located in the transmitter require inspection.	
3. Transmitter is normal, receiver is weak.	*a.* If Battery BA–48 is used, it may be weak.	*a.* Replace Battery BA–48.
	b. Poor antenna installation or location.	*b.* Increase antenna height. Change location.
	c. Check for correct position of IMPEDANCE switch S4 for headset in use.	*c.* Place switch S4 on correct position for headset being used.
	d. Receiver switch S3 is on NET.	*d.* Change switch S3 to PHONE or C.W. position.
	e. Defective receiver tubes.	*e.* Replace receiver tubes.
	f. Check voltage output of power supply.	*f.* See power supply charts.
	g. Major trouble is in receiver.	*g.* See receiver charts.
4. Receiver is normal, transmitter is dead.	*a.* Switch S103 is not on SEND.	*a.* Turn S103 to SEND.
	b. Check voltage output of power supply.	*b.* See power supply charts.
	c. Turn switch S105 to PHONE and press key. Listen for relay K101 clicking. With key closed, press DIAL LIGHT switch S2. If it does not light, then relay K101 is probably at fault.	*c.* See transmitter charts.
	d. Check metering socket voltages according to chart in back of transmitter.	*d.* See transmitter charts.
5. Receiver is normal, transmitter is weak.	*a.* Check metering socket voltages.	*a.* See transmitter charts.
	b. Defective transmitter tubes.	*b.* Replace tubes.
	c. If transmitter is normal on either MO or XTAL operation, but not both, transmitter is at fault.	*c.* See transmitter charts.

171. Sectionalizing Trouble in Receiver Section

Symptom	Probable trouble	Correction
1. Receiver is dead. Tubes and dial light do not light.	*a.* PHONES jacks are dirty or broken.	*a.* Repair, clean, or replace PHONES jacks.
	b. Shorted selenium voltage regulator CR1.	*b.* Replace selenium voltage regulator CR1.
	c. Shorted capacitor C24.	*c.* Replace capacitor C24.
	d. Shorted capacitor C34A.	*d.* Replace capacitor C34A.
	e. Shorted DIAL LIGHT switch S2.	*e.* Replace switch S2.
	f. One of the tube filaments is shorted.	*f.* Check tubes.

Symptom	Probable trouble	Correction
2. Signals are very weak, with volume controls on full maximum position.	*a.* Alinement of one or several stages is off.	*a.* Use signal substitution check (par. 177 and 178).
	b. Tube plate and screen grid voltages are low.	*b.* Use signal substitution check (par. 177) to find which weak stages are not supplied with full voltage.
	c. Faulty tubes.	*c.* Check tubes.
	d. If signals are normal, with loud volume, on C.W. position of control Ⓛ, resistor R16 or capacitor C33 may be open.	*d.* Replace resistor R16 or capacitor C33.
3. Reception is badly distorted.	*a.* Defective tubes.	*a.* Check tubes for gas.
	b. Defective headset.	*b.* Replace the headset.
	c. Incorrect bias voltage on the audio stages. Leaky bias resistor, bypass capacitors, and coupling capacitors. Shorted or open bias resistors.	*c.* Use headset with .05-μf capacitor in series with one lead to localize the faulty stage, then refer to paragraph 172 to find the defective component.
	d. Defective bias cell BT1 in signal grid circuit of tube V6. Check the cell, *only with a vacuum-tube volt-meter.* It should produce 4 to 6 volts.	*d.* Replace bias cell BT1.
	e. Incorrect plate and screen grid voltages on the tubes.	*e.* Check plate and screen grid dc voltages (par. 173).
4. Constant, objectionable hum, buzzing, or sizzling in receiver output on all bands.	*a.* Power supply filter units defective. Vibrator Power Supply PE–237 and vibrator VB16 or VB1 defective. Generator GN–58–(*) regulator not functioning properly.	*a.* Change power supplies or operate radio receiver on Battery BA–48 alone. If symptoms clear up, see chart for appropriate power supply.
	b. One of the plate or screen grid resistors may be defective. Look for burned, charred, discolored, or blistered resistors.	*b.* Replace the faulty resistor.
	c. Dirty contacts in the A. F. GAIN or R. F. GAIN control. Look for dirt on the shafts.	*c.* Replace the control.
	d. Leaky coupling capacitors in audio circuits.	*d.* Test and replace faulty capacitor.
	e. Filter capacitors in dynamotor power supplies or vibrator E201 in Dynamotor-Power Supply DY–88/GRC–9 defective.	*e.* Replace defective filter capacitor or vibrator.
5. Oscillation, whistling, squeals, and motorboating.	*a.* Antenna may be too short because the correct numbers of jumpers are not closed.	*a.* Close the jumpers in accordance with the antenna chart.
	b. Open plate supply and screen grid bypass capacitors. Momentarily, short these capacitors with others of equal capacity, known to be good: C34B, C40, C43, C55, C50, C46, C35, C30, and C9. Check choke coil L16, in filament circuit of tube V2, for internal short.	*b.* Replace those capacitors found to be open. Replace choke coil L16.
	c. When a previous repair job has been completed, some of the wiring in rf and if. circuits may have been displaced. Placing plate leads close to grid leads causes oscillation.	*c.* Place all leads differing in hf potential as far apart as possible. Leads differing in dc potential do not matter, as long as they are adequately bypassed to ground.

Symptom	Probable trouble	Correction
	d. Check tubes for gas.	*d.* Replace the defective tube.
	e. Incorrect plate and screen grid voltages.	*e.* Replace defective components.
	f. Incorrect tracking of hf oscillator with rf tuning stages.	*f.* Refer to alinement (par. 221).
6. Intermittent operation. Abrupt cutting in and out.	*a.* Defective tube. Resistor or capacitor opens intermittently. Loose wiring.	*a.* With an insulated prod, tap all tubes, resistors, capacitors, soldered connections, and transformer shield cans.
	b. One of the stages is not working.	*b.* Use signal substitution method in paragraph 175.
7. Periodic fading when radio set is not on a moving vehicle.	*a.* Defective tube.	*a.* Do not check the tubes, as a tube may check very well in a tube tester but may not be suitable in the receiver. Replace all tubes with those known to be in good condition.
	b. Open grid leak resistors.	*b.* Check the resistance of the following resistors: R1, R6, R16, R18, and R19B.
	c. Antenna may be swaying in the wind.	*c.* Secure guy wires.
	d. Avc is inoperative.	*d.* Refer to receiver trouble localization chart (tube V5).
	e. Atmospheric disturbances.	*e.* Use long-wire antenna and orientate it in the direction of the station desired.
8. Fading signals or intermittent operations on C. W. and CAL. positions only.	*a.* Open capacitor C51.	*a.* Momentarily, parallel capacitor C51 with a capacitor of equal capacity.
	b. Bfo is intermittent.	*b.* Refer to paragraph 172 item 31.
9. No beat note is heard on CAL., but rest of receiver is normal.	*a.* Capacitor C36 is open.	*a.* Momentarily, place a capacitor of the same capacity in parallel with capacitor C36.
	b. 200-kc crystal I 1 is defective.	*b.* Replace crystal I1.
	c. Crystal-oscillator circuit is defective.	*c.* Refer to receiver trouble localization chart (tube V4).

172. Localizing Trouble in Receiver Section

Symptom	Probable trouble	Correction
RF AMPLIFIER V1 (IL4):		
1. No signal passes through. Voltages are normal.	*a.* Capacitor C8 is open.	*a.* Momentarily, parallel capacitor C8 with one of equal capacity.
	b. Capacitor C7A is shorted.	*b.* Check variable air capacitor plates for dirt, dust, burs, and direct shorts.
	c. Capacitor C36 is shorted.	*c.* Momentarily, unsolder capacitor C36 from pin 6 of the rf amplifier (V1).
	d. Resistor R1 is open.	*d.* Check resistor R1.
	e. Check trimmers and the secondaries of transformer T2 for shorts.	*e.* Clean out any dust and dirt. Remove shorts.
	f. Tube V1 is shorted internally.	*f.* Replace tube V1.
2. Incorrect dc voltage on pin 2 for all three bands.	*a.* Capacitor C10 is shorted.	*a.* Replace capacitor C10.
	b. Resistor R2 is open or shorted.	*b.* Replace resistor R2.
	c. Open switch S1C.	*c.* Repair or replace switch S1C.
	d. Primary coil for that band is open.	*d.* Repair or replace transformer T2.

Symptom	Probable trouble	Correction
3. Incorrect dc voltage on pin 3.	*a.* Capacitor C9 is shorted.	*a.* Replace capacitor C9.
	b. Resistor R11 is open.	*b.* Replace resistor R11.
4. Incorrect dc voltage on pin 7.	*a.* If filament voltage on all tubes but V1 is present, then the connection to pin 7 is broken.	*a.* Repair broken lead.
	b. No tubes have filament voltage.	*b.* Refer to paragraph 171.
CONVERTER TUBE V2 (1R5):		
5. No signal passes through. Voltages are normal. Noise heard in headset.	*a.* Switch S1D (rear) is dirty or open.	*a.* Repair or replace switch S1D.
	b. Capacitor C28 is open.	*b.* Momentarily, parallel capacitor C28 with a capacitor of equal capacity.
	c. Resistor R6 is open.	*c.* Momentarily, parallel resistor R6 with one of equal resistance.
	d. Capacitor C31 is shorted.	*d.* Replace transformer T4.
6. Incorrect dc voltage on pin 4.	*a.* Oscillator section of the converter tube V2 is not oscillating.	*a.* If the oscillator section is operating correctly, there will be minus 4.5 volts or more with respect to ground on pin 4 of tube V2. Check this negative voltage with a vtvm only.
	b. Components in oscillator grid circuit from pin 4 of converter tube V2 to ground may be faulty.	*b.* Check the resistances from pin 4 to ground of the converter tube V2 on each of the three bands.
		Position of switch S1 / Resistance from pin 4 to ground: BAND 1 — 103,000 ohms; BAND 2 — 276,000 ohms; BAND 3 — 276,000 ohms. If these values are not obtained, check resistors R7, R3, R4, and R5. Replace transformer T3.
	c. Defective converter tube V2 (1R5).	*c.* Do not check the tube, but replace it with two or three different ones. If the oscillator section still does not work, reinsert the original tube.
	d. Oscillator coils may not be tracking correctly.	*d.* See alinement section or receiver (par. 217 through 224).
7. Incorrect dc voltage on pin 2.	Open primary of if. transformer T4.	Check the resistance of primary of transformer T4 (lugs 3 and 2) (par. 174).
8. Incorrect dc voltage on pin 3.	*a.* Resistor R8 opens.	*a.* Check resistor R8.
	b. Capacitor C30 is shorted.	*b.* Remove capacitor C30 and replace with one of equal value.
9. Incorrect dc voltage on pin 7.	Open or shorted choke L16.	Remove capacitor tube V2, and check coil L16 for open or short.
FIRST IF AMPLIFIER V3 (1L4):		
10. No signal passes through. Voltages are normal.	*a.* Open in secondary of transformer T4 or shorted primary of transformer T5.	*a.* Check transformer resistances (par. 174).
	b. If signal comes through with normal volume on C.W. position of switch S3 but not on PHONE, check signal grid return resistor R16 for open (return resistor).	*b.* Turn switch S3 to PHONE and check resistor R16.

Symptom	Probable trouble	Correction
	c. Capacitor C35 is open.	*c.* Momentarily, shunt capacitor C35 with one of equal capacity.
	d. Transformer T4 or T5 is misalined.	*d.* Refer to paragraph 219.
11. Incorrect dc voltage on pin 2.	*a.* Open or shorted primary of transformer T5.	*a.* Check transformer T5 primary resistance.
	b. Capacitor C37 is shorted.	*b.* Replace transformer T5.
12. Incorrect dc voltage on pin 3.	*a.* Open resistor R12 and shorted capacitor C35.	*a.* Replace defective component.
	b. Open switch S3–2.	*b.* Check the voltage from pin 3 of the rf amplifier tube V1 to ground. If it is normal, then switch S3–2 is probably defective.
	c. Open or shorted R. F. GAIN control R9.	*c.* Check R9.
SECOND IF AMPLIFIER AND CRYSTAL OSCILLATOR V4 (1R5):		
13. No signal passes through. Voltages normal. Switch S3 on PHONE or C.W. position.	*a.* Open or shorted secondary of transformer T5. Shorted primary of transformer T6. Shorted capacitor C38, C44, or C43.	*a.* Check and replace faulty components.
	b. Faulty ground connection to lug 4 of transformer T5.	*b.* Check, clean, and tighten the ground connection to lug 4.
	c. Capacitor C46 is open.	*c.* Shunt capacitor C46 with one of equal capacity.
	d. Transformer T5 or T6 is misalined.	*d.* Refer to paragraph 219.
14. Signal passes, but reduced in volume.	Transformer T5 or T6 is misalined.	Refer to paragraph 219.
15. Switch S3 is on CAL. No beat note is heard in headset. Set is normal when on C.W. or PHONE.	Crystal oscillator section is not functioning. With a vtvm, check for a negative voltage to ground on pin 4 of tube V4. If no negative voltage or a positive voltage is obtained, the circuit is not operating.	
	a. Crystal unit is defective.	*a.* Replace crystal unit.
	b. Tube V4 is defective.	*b.* Try two or three replacements; if the oscillator still does not work, reinsert the original tube.
	c. Faulty resistor R13.	*c.* Turn switch S3 to CAL. and check resistance of resistor R13.
	d. Capacitors C39 and C42 are open or shorted.	*d.* Check capacitors C39 and C42.
	e. Coil T7 is open.	*e.* Check continuity of coil T7.
16. Incorrect dc voltage on pin 2.	*a.* Primary of transformer T6 is open.	*a.* Check primary resistance.
	b. Resistor R15 is open.	*b.* Check resistance of resistor R15.
	c. Capacitor C43 is shorted.	*c.* Replace capacitor C43.
17. Incorrect dc voltage on pin 3 in CAL. position of control Ⓛ.	*a.* Resistor R14 is open.	*a.* Check for resistance from terminals 2 to 4 on transformer T7.
	b. Capacitor C41 is shorted.	*b.* Replace capacitor C41.
18. No dc voltage on pin 7. All other tubes are normal.	Filament is open or shorted.	Replace tube V4.
DETECTOR SECTION OF TUBE V5 (1S5):		
19. No signal passes through. Voltages on tube are normal.	*a.* Open circuit in secondary of transformer T6.	*a.* Check resistance of secondary.

Symptom	Probable trouble	Correction
	b. Capacitors C49 and C48 are open or shorted.	*b.* Check these components and replace if necessary.
	c. Resistor R17, R18, or A. F. GAIN control R19A may be open.	*c.* Check each resistor individually.
20. Signal is badly distorted. Voltages on tube are normal.	*a.* One of resistors R17, R18, or R19A has changed in value.	*a.* Check each resistor individually.
	b. Capacitor C49, C47, C33, or C48 is shorted or open.	*b.* Check component.
	c. Secondary of transformer T6 is misalined.	*c.* Refer to paragraph 219.
AF AMPLIFIER SECTION OF TUBE V5 (1S5):		
21. No signal passes through. Tube voltages are normal.	*a.* A.F. GAIN control R19 may be open or shorted to ground.	*a.* Check resistance of R19A.
	b. Defective tube.	*b.* Replace tube.
	c. Capacitor C52 is leaking.	*c.* Replace capacitor C52.
	d. Capacitor C53 is open.	*d.* Momentarily, short capacitor C53 with one of equal capacity.
22. Oscillations, motorboating and squeals.	*a.* Plate and signal grid leads may be too close together.	*a.* Gently separate these leads as far apart as is possible.
	b. Capacitor C52 is open.	*b.* Momentarily, shunt capacitor C52 with one of equal capacity.
	c. Capacitor C34B is open.	*c.* Momentarily, shunt capacitor C34B with one of equal capacity.
	d. Capacitor C57 (plate bypass for tube V6, 3Q4) may be open.	*d.* Momentarily, shunt capacitor C57 with one of equal capacity.
	e. Capacitor C48 may be shorted.	*e.* Replace capacitor C48.
23. Incorrect dc voltage on pin 4. Other tubes are normal.	*a.* Resistor R20 is open.	*a.* Check resistor R20.
	b. Capacitor C50 is shorted.	*b.* Remove capacitor C50.
24. Incorrect dc voltage on pin 5.	*a.* Resistor R21 is defective.	*a.* Replace resistor R21.
	b. Capacitor C52 is shorted.	*b.* Replace capacitor C52.
	c. Resistor R29 is open.	*c.* Check resistor R29.
	d. Capacitor C34B is shorted.	*d.* Replace C34B.
	e. Primary coil of transformer T9 may be shorted to ground.	*e.* Take a resistance check from terminal 5 on transformer T9 to ground. There should be infinite (∞) impedance. Be sure, however, that capacitor C34B is not shorted or transformer may be wrongly suspected.
25. No voltage on pin 7.	Defective tube.	Check tube.
SECOND AUDIO AMPLIFIER V6 (3Q4):		
26. No signal passes through. Tube voltages are normal.	*a.* A. F. GAIN control R19B is open or shorted.	*a.* Check potentiometer R19B.
	b. Bias cell BT1 is defective. Check with vtvm only.	*b.* Replace bias cell BT1.
	c. Tube is defective.	*c.* Replace tube.
	d. Capacitor C57 is shorted or leaky.	*d.* Replace capacitor C57.
	e. Primary of output transformer T9 is shorted.	*e.* Check resistance between terminals 2–5 on transformer T9.
27. Signals are badly distorted. Voltages are normal.	*a.* Capacitor C54 is open or shorted.	*a.* Replace capacitor C54.
	b. Capacitor C53 is leaking.	*b.* Replace capacitor C53.
	c. Capacitor C57 is defective.	*c.* Replace capacitor C57.
	d. Tube is gassy.	*d.* Replace tube.

Symptom	Probable trouble	Correction
	e. DIAL LIGHT-PUSH switch S2 is defective.	*e.* When DIAL LIGHT-PUSH switch S2 is not pressed, be sure that both sides of tube 3Q4 are supplied filament voltage.
28. Signal output is very low. Volume controls are in maximum position. Voltages are normal. Headset is normal.	*a.* Output IMPEDANCE switch S4 is in incorrect position.	*a.* For the following equipment, turn IMPEDANCE switch to:

Equipment	Switch position
Loudspeaker LS–7, or LS–7–A, or Permanent Magnet Loudspeaker LS–203/U.	4000
Headset HS–30–(*)_____	250

	b. Capacitor C55 is open.	*b.* Momentarily, shunt capacitor C55 with one of equal capacity.
	c. Tube V6 (3Q4) is defective.	*c.* Replace tube V6 (3Q4).
	d. Capacitor C56 is leaky.	*d.* Replace capacitor C56.
	e. Capacitor C34B is open.	*e.* Replace capacitor C34B.
	f. If the sidetone signal also is low, the trouble is probably in the output impedance-matching transformer T9.	*f.* Check the coil resistances of the transformer.
	g. Capacitor C61 is shorted.	*g.* Replace capacitor C61.
	h. PHONES jacks J1 and J2 are defective.	*h.* Inspect and clean PHONES jacks J1 and J2.
29. Incorrect dc voltage on pins 2 and 6. All other tubes are normal.	*a.* Primary of transformer T9 is open or shorted to ground.	*a.* Check primary resistance, and resistance between terminals 5 and 4 which should be infinite (∞).
	b. Capacitor C57 is shorted or leaking.	*b.* Replace capacitor C57.
	c. Capacitor C56 is shorted or leaking.	*c.* Replace capacitor C56.
30. Incorrect dc voltage on pin 4. All other tubes are normal.	*a.* Resistor R23 is shorted or open.	*a.* Replace resistor R23.
	b. Capacitor C55 is shorted.	*b.* Replace capacitor C55.
31. Incorrect dc voltage on pin 7.	*a.* DIAL LIGHT-PUSH switch S2 is open or shorted.	*a.* Check switch S2.
	b. Tube V6 (3Q4) is defective.	*b.* Replace tube V6 (3Q4).
BFO TUBE V7 (1R5):		
32. Bfo is inoperative. No tone is heard on C.W. or CAL. position. Phone operation is normal. All dc voltages are normal.	Capacitor C51 is open.	Replace C51.
33. Incorrect dc voltage on pin 4.	*a.* Bfo circuit is not oscillating.	*a.* Turn switch Ⓛ to C.W. With a vtvm, take voltage reading from pin 4 to ground of tube V7 (1R5). Pin 4 should be 10 volts *below* ground potential. If reading obtained shows pin 4 to be much less than —10 volts or even positive, then bfo circuit is not oscillating.
	b. Tube V7 (1R5) is defective.	*b.* Replace tube V7 (1R5). Checking is not necessary.
	c. Resistor R25 may be open.	*c.* Shunt resistor R25 with one of equal value.

Symptom	Probable trouble	Correction
	d. Coil T8 may be open or shorted.	*d.* Make resistance checks on the terminals of coil T8. Replace coil T8 if another unit is available.
	e. Capacitor C60 may be open.	*e.* Shunt capacitor C60 with one of equal value.
	f. Coil T8 is not alined.	*f.* Refer to paragraph 220.
34. Incorrect dc voltage on pin 2. All other tubes are normal.	Resistor R22 is open or shorted.	Replace resistor R22.
35. Incorrect dc voltage on pin 3. All other tubes normal. Switch S3 on C.W. or CAL.	*a.* Part of coil T8 is open.	*a.* Check the resistance between terminals 2 and 4 of coil T8.
	b. Capacitor C60 is shorted.	*b.* Replace capacitor C60.
	c. Resistor R27 is defective.	*c.* Replace resistor R27.
	d. Tube V7 (1R5) is internally shorted.	*d.* Replace tube V7 (1R5).
36. No dc voltage on pin 7. All other tubes normal.	*a.* Short or open in the supply line to tube V7.	*a.* Remove tube V7 and check for zero resistance between pin 7, of socket V7 and pin 7 of tube V4 (1R5).
	b. Tube V7 (1R5) is defective.	*b.* Replace tube V7 (1R5).

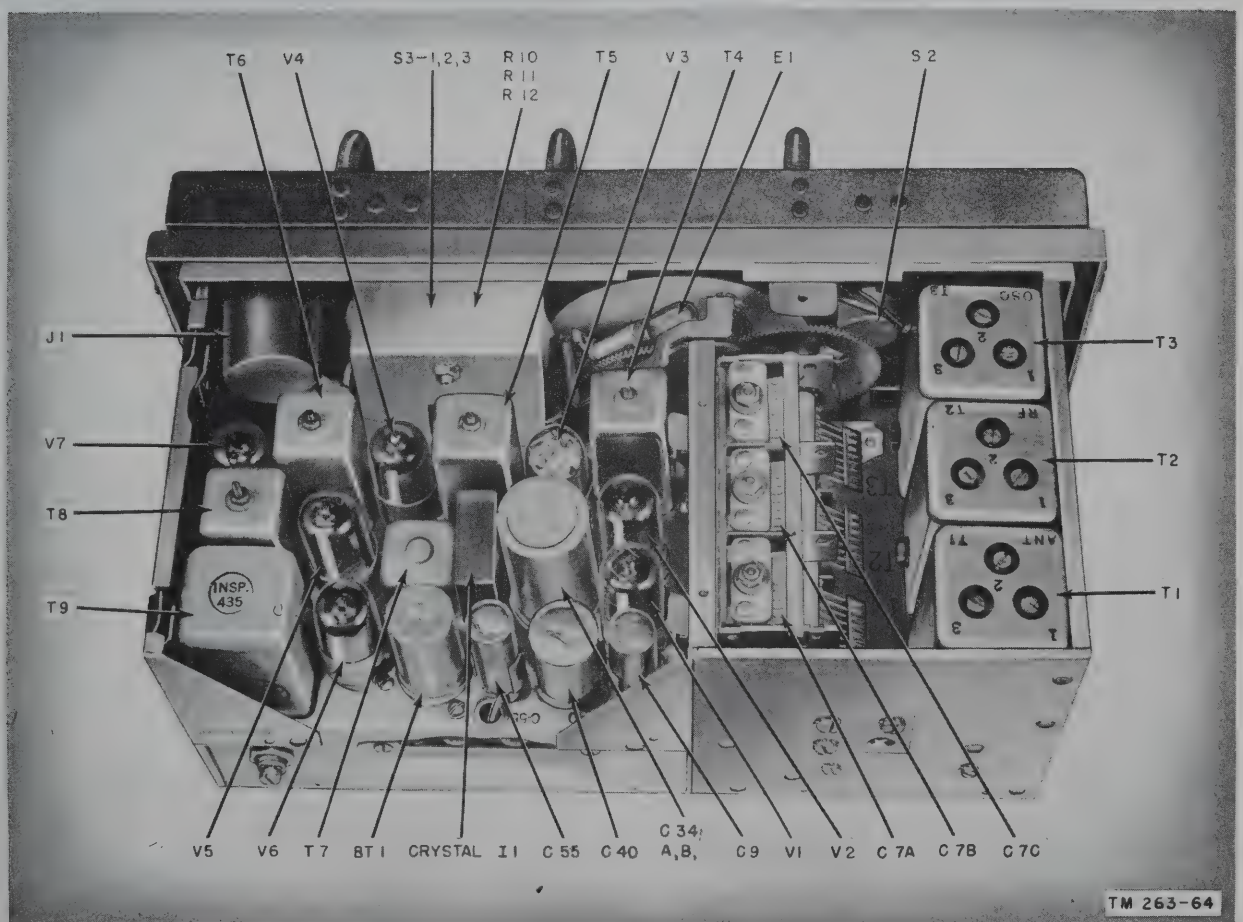

Figure 110. Receiver top, parts location.

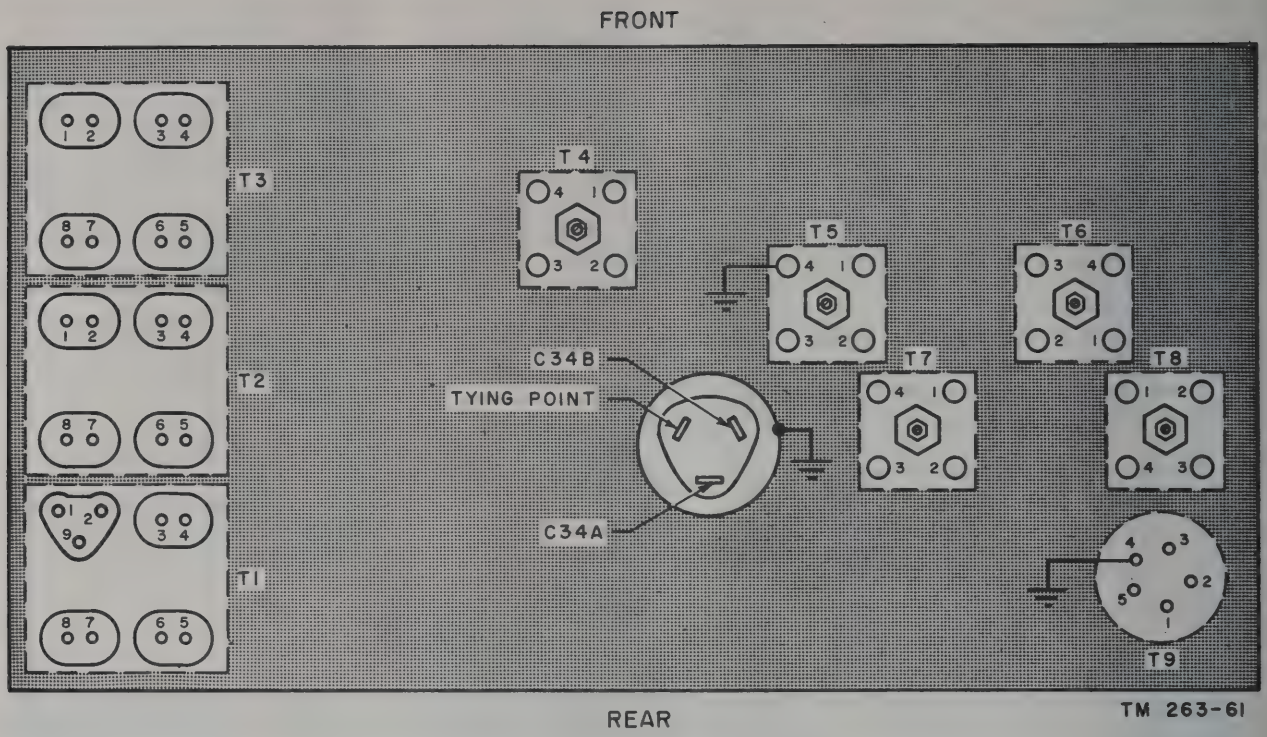

Figure 111. Receiver transformer and electrolytic capacitor terminal designations.

173. Receiver Tube Socket, Voltage and Resistance Diagram

a. The dc voltages given in figure 115 are made with the vtvm (20,000-ohm per volt range) under the following conditions, except as noted on the diagram. Those voltage readings marked with an asterisk (*) were made with the vtvm (par. 165).

(1) Switch S103 (on transmitter section) is at SEND.
(2) Switch S101 (on transmitter section) is at BAND 2–MO.
(3) Switch S105 (on transmitter section) is at CW–HI.
(4) TUNING control C7 is tuned to 5,100 kc.
(5) Switch S3 is at C.W.
(6) Switch S1 is at BAND 2.
(7) A.F. GAIN control R19 and R.F. GAIN control R9 are at full on, except as noted.
(8) All voltages are measured to chassis, except as noted.

b. The resistance values were measured with the vtvm using same receiver-transmitter switch positions mentioned above and under the following conditions:

(1) All resistances are measured with tubes in sockets and are measured from tube pin to chassis.
(2) The receiver is disconnected from the transmitter.
(3) The phone plug is disconnected from PHONES jack.

174. Resistance of Receiver Transformers and Coils

The resistances of the transformers and coils in the receiver are listed below:

Transformer or coil	Terminals	Ohms[a]	
T1	Place test prods into 8–9 on power socket J3 to test all three primary coils of transformer T1.	BAND 1	.5[b]
		BAND 2	.5[b]
		BAND 3	.5[b]
	4–GND	BAND 3	.5[b]
	3–GND	BAND 2	.5[b]
	2–GND	BAND 1	.5[b]

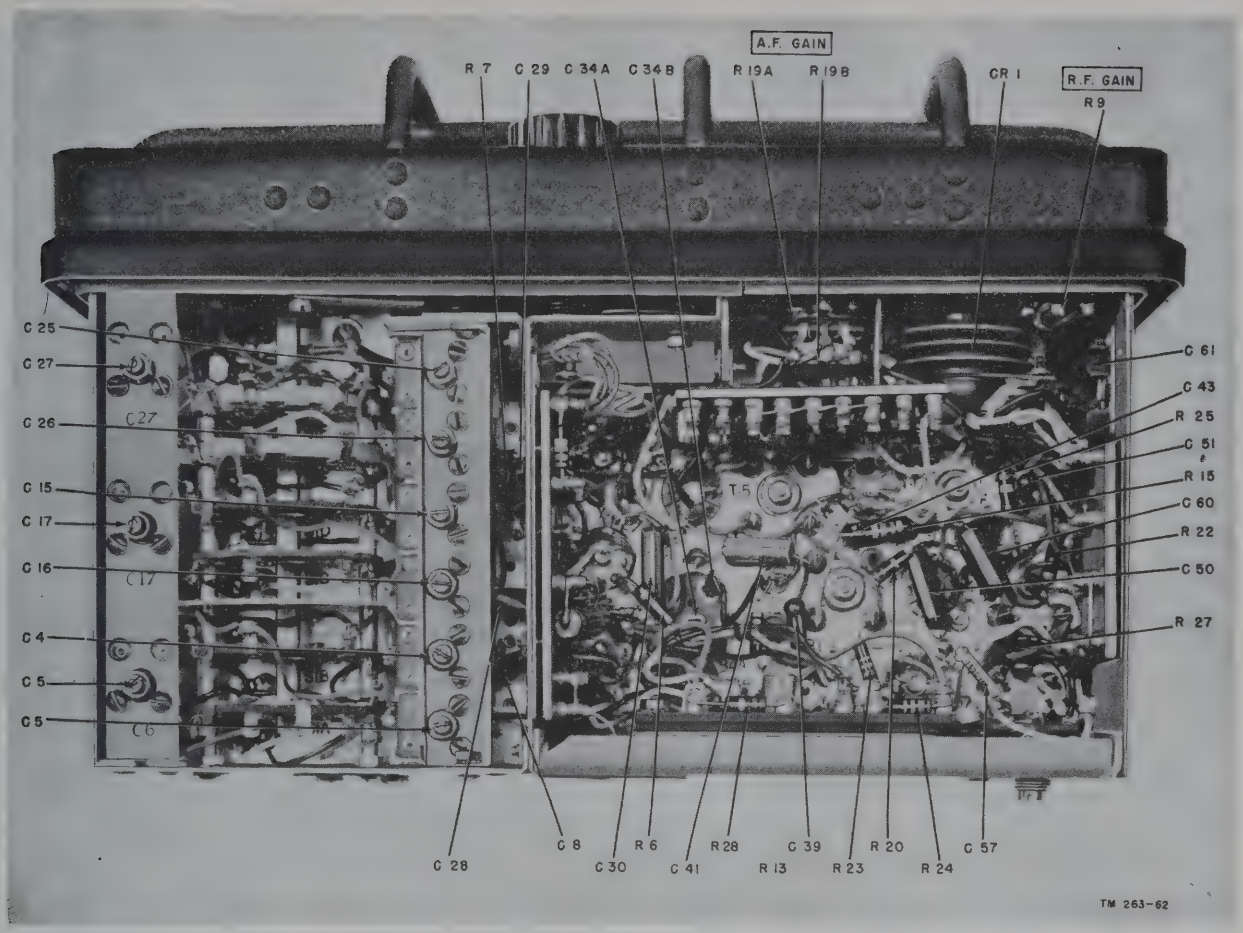

Figure 112. Receiver bottom, parts location.

Transformer or coil	Terminals	Ohms[a]
T2	5–1	BAND 3 21
	6–1	BAND 2 10
	7–1	BAND 1 .1
	4–GND	BAND 3 .5[b]
	3–GND	BAND 2 .5[b]
	2–GND	BAND 1 .5[b]
T3	4–GND	BAND 3 220,000
	3–GND	BAND 2 220,000
	2–GND	BAND 1 47,000
	5–GND	BAND 3 .5[b] Remove tube V2.
	6–GND	BAND 2 .5[b] Remove tube V2.
	7–GND	BAND 1 .5[b] Remove tube V2.
T4	3–2	5
T5	1–4	5
T6		
T7	3–4	26
	4–2	30,000
T8	1–4	Cannot be checked because capacitor C58 is in series with coil.
T9	2–5	1,200
	1–3	350
	3–4	22
L16		With converter .5[b] tube V2 removed.

[a] Turn switch S1 to the band indicated for the terminals to be checked.

[b] Resistance negligible, .5 ohm or less.

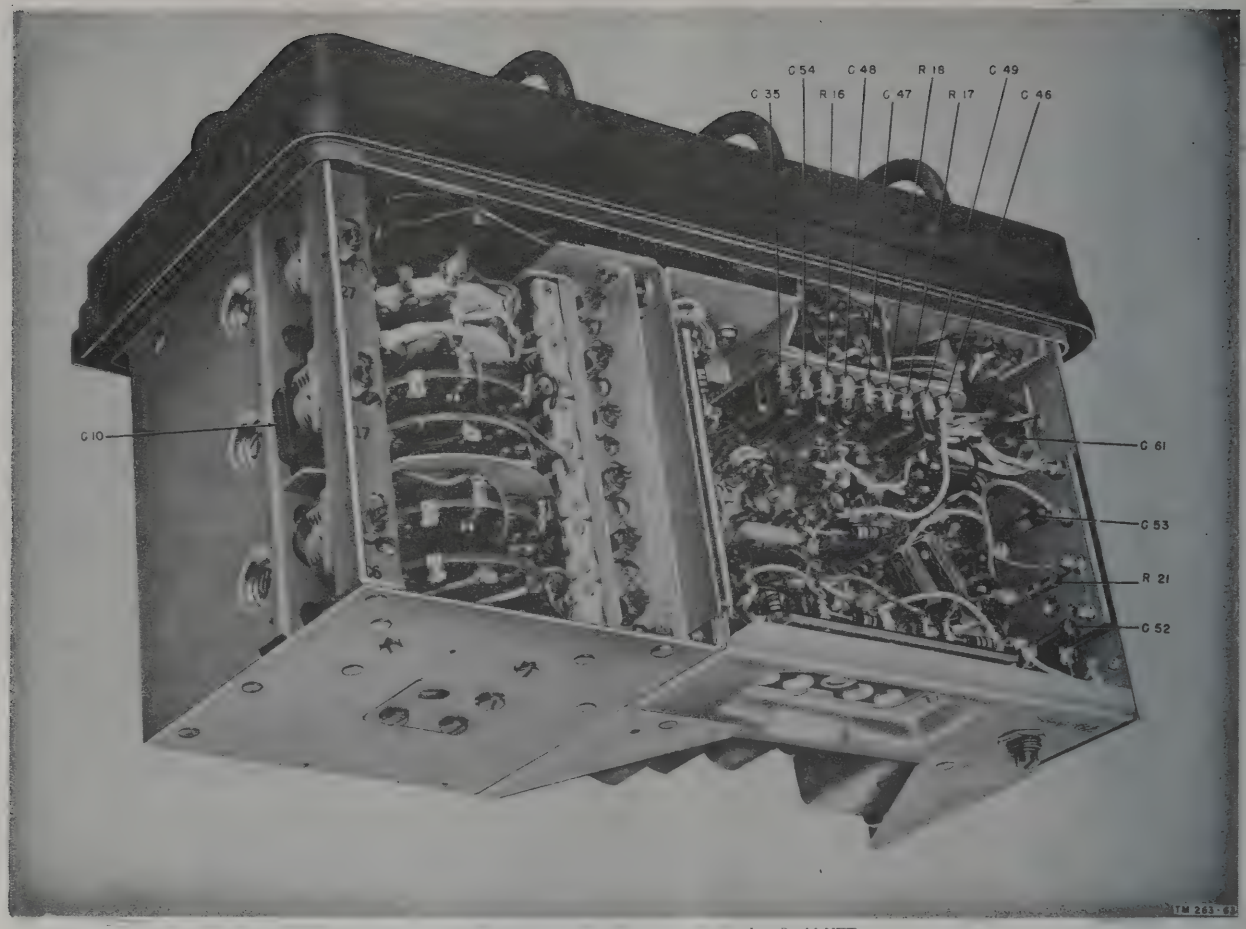

Figure 113. Receiver bottom, parts location.

175. Signal Substitution Notes

When the troubleshooting charts do not disclose the source of trouble, the signal substitution or signal tracing method must be used.

a. Signal substitution requires a source of audio, if. and rf signals. R. F. Signal Generator Set AN/URM–25 (signal generator) is suitable for the if and rf signals, and Audio Oscillator TS–328A/U (af oscillator) is suitable for the af signals.

b. In addition, a headset or permanent magnet loudspeaker is necessary. In the tests indicated, ground the negative lead of the signal generator or the af oscillator to the receiver chassis. For rf signals, connect the other lead of the signal generator through a 120-μf 500-volt capacitor. For if and af signals, use .05-μf 600-volt capacitor.

c. Note the volume, and listen for serious distortion from the loudspeaker or headset at the various points in the signal substitution procedure. When working back from the output to the input stages, decrease the output of the af oscillator and the signal generator as much as possible. If possible, compare the defective receiver with a receiver known to be in good condition.

d. Check the wiring and soldering in each stage during the procedure.

Caution: Do not remove shield cans from transformers unless the trouble has been traced to a specific unit. Do not damage the wiring by pushing it back and forth during inspection. Be careful not to damage the receiver in any other way.

e. Misalinement of one or more stages of the receiver will cause reduced output. Misalinement of the hf oscillator may prevent any output.

f. When trouble is localized in a given stage,

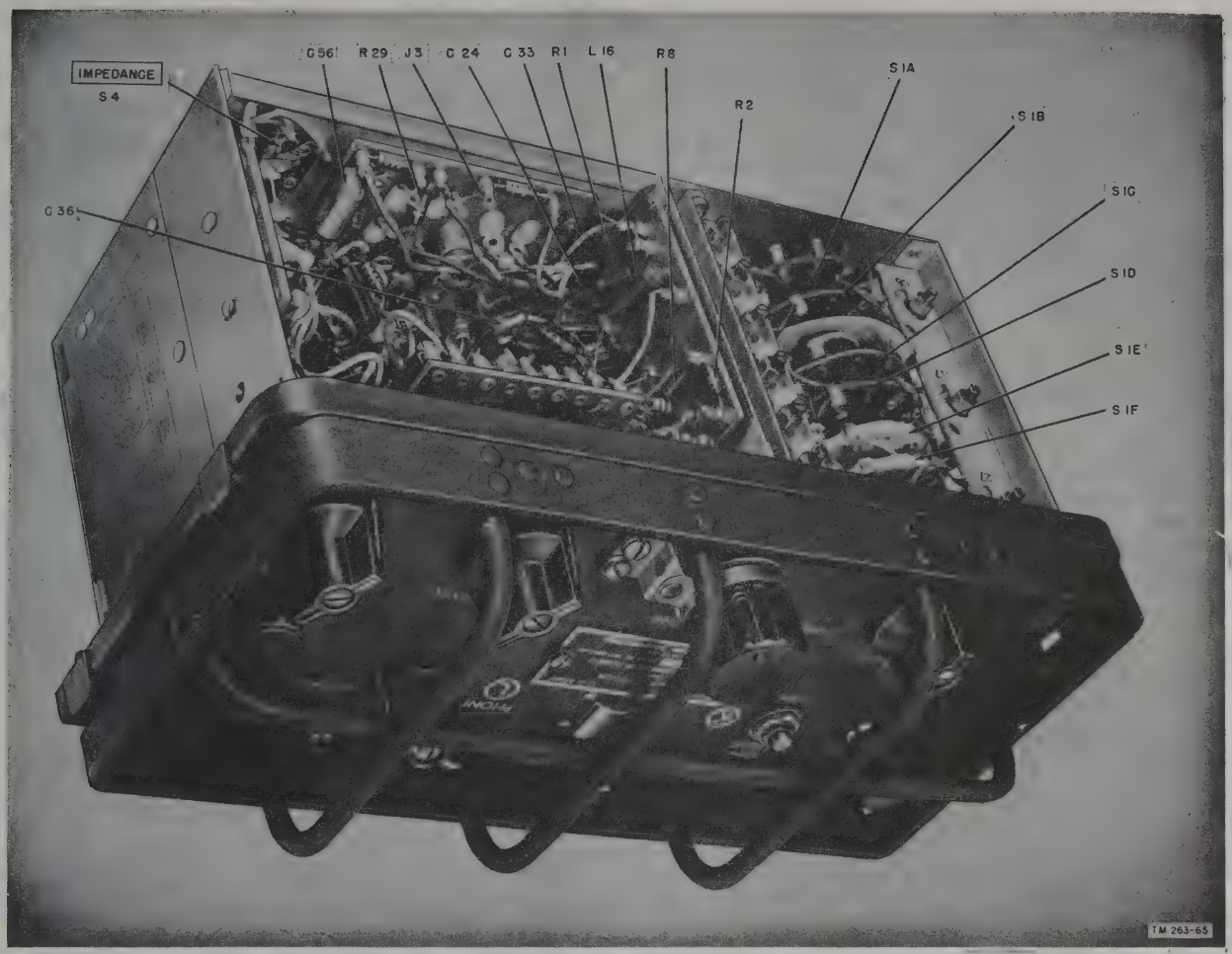

Figure 114. Receiver bottom, parts location.

first test the tube; then measure the voltage; and finally measure the resistance at the tube socket of that stage.

g. Trouble in a circuit or stage may not cause changes in voltage and resistance measurements at the tube socket. The instructions included in this paragraph are merely used as a guide and should suggest other procedures, such as voltage and resistance measurements on individual parts.

h. Remove only *one* tube at a time when testing. Check the number of the tube, and, if it is not defective, return it to its proper socket before another tube is removed.

i. At each step, it is assumed that all previous steps were completed satisfactorily. Isolate and clear any trouble located before proceeding with the succeeding steps.

176. Af Tests

Place switch S3 on PHONE position. For the signal substitution method, use the following procedure:

a. Transformer T9. Set the af oscillator to an audio-frequency note such as 1,000 cycles, and connect the hot lead through the .05-μf capacitor to terminal 2 of transformer T9. A weak undistorted signal should be heard in the headset. If not, the trouble is isolated to the components making up the output section.

b. Audio Amplifier V6. Clip the hot lead through the .05-μf capacitor to pin 3 of tube V6. The signal should be heard with slightly greater intensity in the headset. If no signal or a decidedly weaker signal is heard, then either tube V6 or its associated circuit is defective. Refer to paragraph 172.

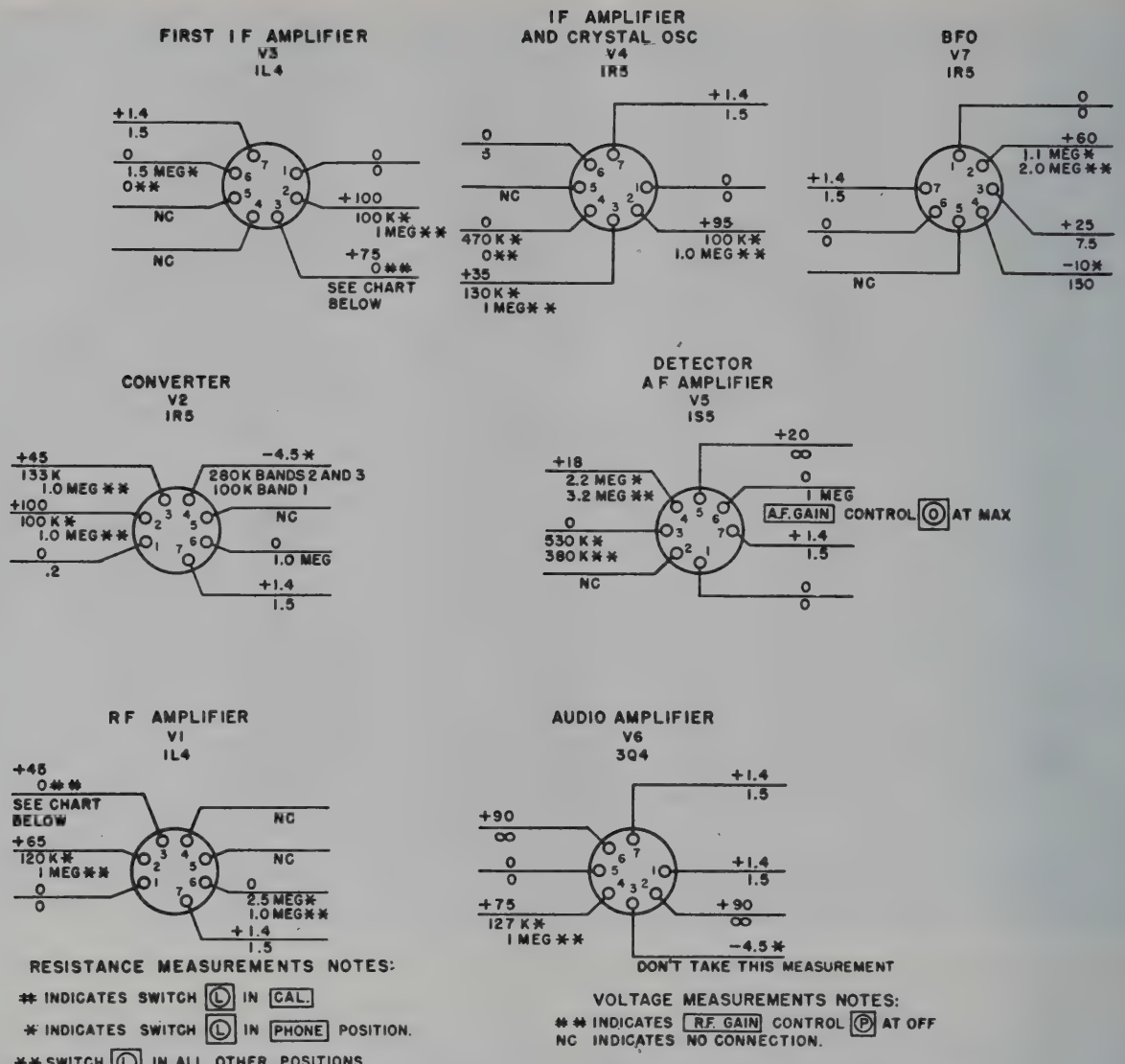

RESISTANCE MEASUREMENTS NOTES:

\# INDICATES SWITCH (L) IN CAL.

* INDICATES SWITCH (L) IN PHONE POSITION.

** SWITCH (L) IN ALL OTHER POSITIONS.

VOLTAGE MEASUREMENTS NOTES:

** INDICATES R.F. GAIN CONTROL (P) AT OFF

NC INDICATES NO CONNECTION.

V1 PIN 3 (SCREEN) RESISTANCE TO CHASSIS			V3 PIN 3 (SCREEN) RESISTANCE TO CHASSIS		
SWITCH (L) POSITION	R.F. GAIN CONTROL		SWITCH (L) POSITION	R.F. GAIN CONTROL	
	MAXIMUM	MINIMUM		MAXIMUM	MINIMUM
PHONE	190 K	100 K	PHONE	120 K	27 K
C.W.	1.1 MEG	100 K	C.W.	1.1 MEG ***	27 K
NET	1.1 MEG	100 K	NET	5.7 MEG	5.7 MEG
CAL.	1.1 MEG	100 K	CAL.	500K	27 K

NOTE:

*** 500K IN EARLIER MODELS

TM263-58A

Figure 115. Receiver tube socket, voltage and resistance diagram.

c. First Audio Amplifier V5.

(1) Place the hot lead through the .05-μf capacitor on pin 5 of tube V5. If tube V6 is found normal, the signal heard should be slightly lower than on pin 3 of tube V6. If the signal is not heard at all, the trouble thus has been traced to the circuit comprised of resistors R21 and R19B, capacitors C52, C53, and C54, and bias cell BT1. Also, the plate of tube V5 may be shorted to another element in the tube envelope.

(2) Next, clip the hot lead through the

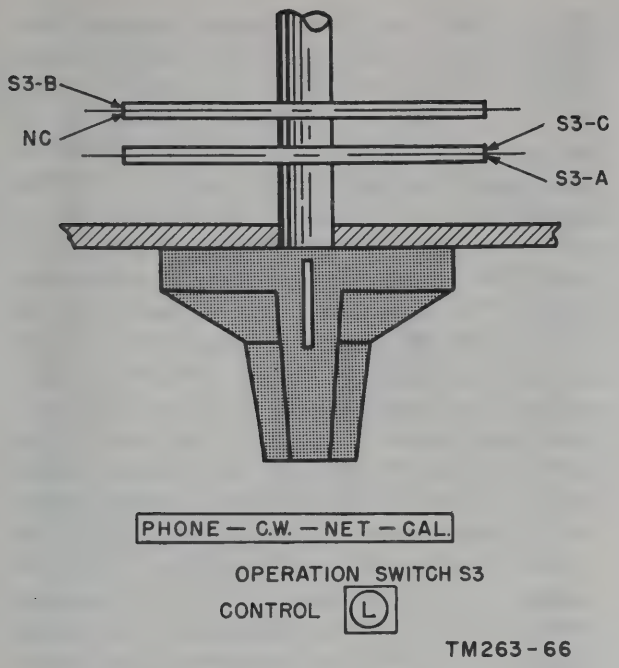

Figure 116. Location of water sections of switch S3.

.05-μf capacitor to pin 6 of tube V5. A louder signal should be heard in the headset. If not, refer to paragraph 172 for tube V5.

d. Detector Section of Tube V5. For the next series of tests, the signal generator should be set to 456 kc with 30 per cent modulation at 400 cycles. Connect the hot side of the signal generator through the .05-μf capacitor to the diode plate (pin 3) of tube V5. The signal heard (af tone) should be of approximately the same magnitude as for pin 6 of the same tube (*c*(2) above). If the signal is not heard at all, the trouble therefore has been isolated to the detector circuits. Refer to paragraph 172.

e. Bfo V7. For checking the bfo only, all modulation should be removed from the signal generator, and switch S3 on the receiver should be set to C.W. position. Clip the hot lead to the diode plate (pin 3) of tube V5. Change the signal generator output $\pm$1KC and increase the output volume until a beat note is heard. If no sound is heard in the phones, the bfo is not operating. Refer to paragraph 172.

177. If Tests

a. Second If Amplifier V4. Place switch S3 on PHONE. Change the frequency back to 456 KC and restore the modulation to the signal generator. Place the hot lead through the .05-μf capacitor on pin 2 of tube V4. If no signal is heard, transformer T6 is probably defective or out of alinement. Clip the hot lead through the .05-capacitor to the signal grid (pin 6). The signal heard should be loud enough so that the output volume of the signal generator will have to be reduced. If a weak signal or no signal is heard, refer to paragraph 172 items 12 through 19.

b. First If Amplifier V3. Repeat the same procedure as for the second if amplifier (*a* above). The signal heard should be very loud.

c. Converter Tube V2.

(1) Connect the hot lead through the .05-μf capacitor to the plate (pin 2) of tube V2. If no signal is heard, transformer T4 may be defective or misalined.

(2) To determine if the oscillator part of the converter stage is at fault, measure the dc voltage from pin 4 to ground with the vtvm. A reading of about —4 volts indicates that the oscillator section is working.

178. Rf Tests

a. Converter Tube V2.

(1) Set the signal generator to a frequency of 12 mc, modulated 30 per cent at 400 cycles. Turn control (M) to BAND 1. Tune TUNING control (N) to 12 mc. Connect the hot lead through the 120-$\mu\mu$f capacitor to the signal grid (pin 6) of converter tube V2. A loud, clear signal should be heard in the headset. If not, the oscillator section is defective or the hv supply to the tube has failed. Refer to paragraph 172.

(2) Repeat the above procedure for the highest and lowest frequencies in each waveband.

b. Rf Amplifier.

(1) Clip the hot lead of the signal generator through the 120-$\mu\mu$f capacitor to the plate of the rf amplifier (pin 2). The signal should come through to the headset with high volume for

each of the lowest and highest frequencies in the three bands. If not, transformer T2 probably needs realinement.

(2) Clip the hot lead through the 120-$\mu\mu$f capacitor to the signal grid (pin 6) of tube V1. If the signal does not come through louder than for any of the other stages, the tube is defective or the supply voltages to the tube are incorrect. Refer to paragraph 172.

c. Antenna Circuits.

(1) Connect the hot lead through the 120-$\mu\mu$f capacitor to terminal 8 of receiver receptacle J3. Disconnect the ground lead of the signal generator from the chassis, and reconnect it to terminal 9 of receptacle J3. The signal should come through loudly and clearly for the high and low frequencies of all three bands. If not, transformer T1 is either defective or misalined.

(2) The possibility that the antenna circuit may be defective within the transmitter must not be overlooked. To check this, remove the hot lead from terminal 8 of receptacle J3, and reconnect it to the ANT. binding post on the transmitter. Turn control Ⓓ on the transmitter to PHONE. If the signal does not come through with loud volume, transformer T114, switch S102F, or relay K101 may be defective.

179. Sectionalizing Trouble in Transmitter Section

a. General. The transmitter section is constructed as a compact unit that does not lend itself readily to the usual methods used in sectionalizing trouble. Sectionalization can be done best with the voltohmmeter, because there are no visual indications other than resonance INDICATOR Ⓑ to determine whether or not the transmitter is functioning properly. A simple test is to set the controls for calibrating the transmitter against the receiver, as when operating as a net station. If the beat note is not heard, and the receiver is known to be good, the transmitter is probably defective. Remove the transmitter by unfastening the four catches and the connecting cable and pulling the unit straight out of the case. Check all the tubes, preferably by replacing them with new tubes (par. 81). If the tubes are satisfactory, check the voltages at the metering socket with a voltmeter to determine whether they are in conformance with the metering socket voltage chart on the back of the transmitter chassis. A reproduction of the chart is shown below. If any of the voltages are abnormal, refer to the sectionalization and localization charts.

Caution: Be very careful not to touch the plate cap of power amplifier tube V103 (2E22). It caries a potential of 500 volts to ground *at all times.*

METERING		SOCKET VOLTAGES–P. A.–HIGH POWER	
Term.	Term.	Voltage	MEASUREMENT
2+	8—	.10	PLATE CURRENT-NO LOAD–PHONE*.
3+	7—	250	SCREEN GRID–PHONE
4—	7+	40	SUPPRESSOR GRID BIAS-PHONE.
5—	7+	60	GRID BIAS
6+	7—	105	MO.–MOD.–REC. PLATE VOLTAGE.
8+	7—	500	PLATE VOLTAGE
1+	7—	6.3	FIL. VOLTAGE

* METER LEADS DANGEROUS WHEN POWER IS ON. CURRENT IN M.A. = VOLTAGE × 50.

b. Sectionalizing Trouble in Transmitter Section.

Symptom	Probable trouble	Correction
1. Transmitter inoperative. No voltage between 1 and 7 at metering socket. Control Ⓓ on CW key down. All other metering socket voltages are normal.	Capacitor C132 is shorted.	See figure 90. Replace capacitor C132.
	Capacitor C115 is shorted.	Replace capacitor C115.

Symptom	Probable trouble	Correction
2. No voltage between 6 and 7 of metering socket.	Switch S103D is defective or dirty.	See figure 91. Repair and clean switch S103D.
	Tube V104 is defective.	Replace tube V104.
	Capacitor C134 is shorted.	Replace capacitor C134.
	Capacitor C138 is shorted.	Replace capacitor C138.
3. No voltage between 8 and 7 of metering socket.	Keying realy K101 contacts 7 and 8 are shorted together.	Remove short and clean contacts.
	If there is no voltage for only one or two bands, any of capacitors C118, C119, or C120 may be shorted. If there is no voltage on all bands, either capacitor C101C or capacitor C121 is shorted.	Inspect capacitors and remove short, Replace capacitor C121.
	Lug 3 of T109 shorted to chassis when back shield is closed.	Bend lug 3 from edge of chassis.
4. Beat note not heard when receiver-transmitter is set up for net operation. Metering socket voltages are normal.	MO or DOUBLER stage not operating.	Refer to paragraph 180.
5. Beat not heard when receiver-transmitter is set up for net operation.	Check metering socket voltage between 2 and 8. If an incorrect reading is obtained, the POWER AMPLIFIER stage is faulty.	Refer to paragraph 180.
6. Signal is radiated, but without modulation on PHONE and MCW positions of control Ⓓ.	Modulator tube V105 defective.	Replace tube.
	Incorrect voltages on modulator tube elements.	See paragraph 180 (modulator).
	Suppressor grid of power amplifier V103 incorrectly biased.	See paragraph 180 (symptom 13).
	MODULATOR stage circuit defective.	See paragraph 180 (modulator).

180. Localizing Trouble in Transmitter Section

Because of the compactness of the transmitter, it may be difficult to localize trouble without first removing the main tuning capacitor C101. This tuning capacitor is a complete plug-in unit and can be removed as follows:

a. Mesh C101 (0 setting on dial). Remove the dial-lock screws and dial knob (fig. 117) from the main tuning capacitor shaft on the front panel of the transmitter. On some transmitter models, the dial knob is held to the shaft by a small setscrew which can be loosened with the larger Bristo wrench No. 6 contained in Box BX–53.

b. Remove all screws marked "B" on the bottom of the transmitter assembly (fig. 118) and remove the cover plate held on by these screws. On earlier models, screws marked "A" also must be removed.

c. Swing up the hinged back panel of the transmitter to expose the main tuning capacitor as in figure 119.

d. Remove the spade lug on the side of the tuning capacitor shown in figure 119.

e. Following this step, remove the three capacitor retaining screws on the front panel of the transmitter seen in figure 117.

f. Again, from the rear of the transmitter, gently rock the entire capacitor assembly toward and away from the back of the front panel, lifting it outward at the same time.

Caution: Any variation in the plates that might occur from the removal will seriously affect the calibration of the transmitter.

Symptom	Probable trouble	Correction
MASTER OSC 3A4 (V101):		
1. Master oscillator does not oscillate on either MO or XTAL position of band 1.	Faulty tube V101.	Replace tube V101.
	Grid coil between terminals 4 and 5 of transformer T101 is open.	Check resistance between 4 and 5. Replace transformer T101.
	One of capacitors C146, C101A, C102, C129, and C106B may be shorted.	Check resistance between terminals 1 and 3 of tranformer T101.
	Grid resistor R102 is open.	Replace resistor R102.
	Capacitor C105 may be open.	Momentarily, shunt capacitor C105 with one of equal capacity.
	Capacitor C103 may be open.	Momentarily, shunt capacitor C103 with one of equal capacity.
	Capacitor C104 may be open.	Mometarily, shunt capacitor C104 with one of equal capacity.
2. Oscillator does not oscillate on XTAL position only.	If oscillator does not oscillate for only one or two crystals, they are probably defective or switches S101D and S101E are dirty or open.	Replace the crystals. Clean or replace the switch sections.
	Oscillator plate coil in transformer T101 mistuned.	Refer to paragraphs 217 through 224 on alinement.
3. Incorrect dc voltage on pin 3.	Resistor R101 open.	Check resistor; replace if defective.
	Capacitor C103 or C104 may be shorted.	Replace defective capacitor.
4. Incorrect dc voltage on pin 2 or 6.	Open plate coil for one or two bands.	Replace faulty transformer.
	Switch S101A open or dirty.	Clean or replace switch S101A.
	Partially short on one of capacitors C146, C101A, C129, and C106.	Replace shorted capacitor.
5. No voltage on pin 7.	Resistor R110 open.	Replace resistor R110.
	Shorted regulator CR101.	Replace regulator CR101.
DOUBLER 3A4 (V102):		
6. DOUBLER stage does not pass oscillator signal to control grid of V103.	Capacitor C109 or C110 open.	Momentarily, shunt capacitor C109 or C110 with one of equal capacity.
	Doubler coil T104A, T104B, or T104C, misalined.	See section III on alinement.
	Resistor R104 open.	Replace resistor R104.
	Switch S101G or S101I open or dirty.	Clean or replace switches.
7. No dc voltage on pin 2 or 6.	Choke coil L101 open.	Replace choke L101.
	Resistor R105 open.	Replace resistor R105.
	Relay K101 contacts 9 and 10 defective.	Check and clean contacts.
8. No dc voltage on pin 3.	Resistor R120 open.	Replace resistor R120.
	Capacitor C142 shorted.	Replace capacitor C142.
	Resistor R121 open.	Replace resistor R121.
9. No voltage on pin 7.	Resistor R110 open.	Replace resistor R110.
POWER AMPLIFIER 2E22, V103:		
10. Power amplifier does not pass signal.	Switch S101J or S101L open.	Check switches and clean contacts.
	Open circuit in one of pa coils T104A, B, and C.	Check continuity of the three pa coils.
	Pa coils T107, T108, and T109 may be misalined.	Refer to paragraphs 217 through 224 on alinement.
	Plate cap connection may be fautly.	Repair plate cap connection.
11. Excessive plate current as indicated by abnormal voltage at terminals 2 and 8 on metering socket.	Antenna circuits or coils T107, T108, and T109 are misalined.	Refer to section III on alinement.
	Insufficient dc grid bias. Check terminals 5 and 7 of metering socket. If voltage is too low, resistor R107 is open.	Replace resistor R107.

Symptom	Probable trouble	Correction
12. Excessive signal grid current, as evidenced by abnormally high voltage from 5 to 7 on the metering socket.	Screen grid supply voltage too low. Check voltage between 3 and 7 of metering socket on PHONE position of control Ⓓ. If an abnormal reading is obtained, check resistors R124, R117, and R118. Capacitor C116 may be shorted.	Replace defective components.
	Plate supply voltage may be too low. Check variable tuning capacitor C101C for leakage. Capacitor C121 may be leaking.	Clean capacitor C101C. Replace capacitor C121.
	Overload relay K102 contacts open.	Refer to symptom 28 of this chart.
13. Improper suppressor grid bias, as evidenced by voltage reading from pins 7 to 4 on metering socket, on PHONE and MCW.	Incorrect signal grid current. The suppressor grid receives its dc bias from across relay coil K102A and resistor R107.	See symptom 12 above.
	Capacitor C117 may be shorted.	Replace capacitor C117.
14. Incorrect voltage from plate cap of tube to ground. ***Caution:*** There are 500 volts to ground on the plate cap of tube V103 (2E22).	Resistor R108 open.	Replace resistor R108.
	Capacitor C121 shorted.	Replace capacitor C121.
	One of coils T107, T108, and T109 may be open.	Check resistance of the coils.
15. Incorrect dc supply voltage on pin 1 of tube.	If the condition is only at PHONE, contacts 14 and 15 of relay K101 are defective.	Clean contacts of relay K101.
	Switch S105–3 is open or dirty.	Repair switch S105–3.
	Capacitor C115 is shorted.	Replace capacitor C115.
MODULATOR 3A4 (V105):		
16. No modulator voice output. No sidetone signal.	Resistor R111 or R112 open.	Check resistor R111 or R112.
	Open circuit in primary or secondary of transformer T112 or T113.	Check for continuity of transformer T112 or T113.
	Defective tube V105.	Replace tube V105.
	Jack J104 defective.	Repair and clean the jack.
17. Modulator inoperative on MCW position only of control Ⓓ. Tube dc supply voltages are normal.	Capacitor C143 defective.	Replace capacitor C136.
	Defective tube V105.	Replace tube V105.
18. No sidetone signal sent to receiver. Otherwise, modulator operates normally.	Potentiometer R115 (control Ⓖ) open or dirty.	Replace potentiometer R115.
19. Incorrect dc supply voltage on pin 3.	Resistor R113 open.	Replace resistor R113.
	Capacitor C137 shorted.	Replace capacitor C137.
	Switch S3–3 in *receiver* is defective.	Inspect and repair switch S3–3.
20. Incorrect dc supply voltage on pins 2 and 6.	Transformer T113 open between terminals 3 and 4. Choke coil L103 open.	Check for continuity.
	Capacitor C138 shorted. Capacitor C143 shorted.	Replace defective components.
	Relay K101 contacts 17 and 18 are defective.	Repair and clean the contacts.
21. Incorrect dc supply voltage on pin 7.	Resistor R110 open.	Check resistor R110.

Symptom	Probable trouble	Correction
KEYING RELAY K101:		
22. Relay does not operate when key is pressed.	Relay coil is open.	Disconnect one end of resistor R125 and test for continuity through coil of relay K101.
	Switch S101N defective.	Inspect and clean switch S101N.
	Capacitor C133 shorted.	Replace capacitor C133.
	Defective relay.	Replace defective relay.
23. Relay, contacts chatter.	Contacts do not close in the proper sequence.	Refer to paragraphs 244 through 253.
	Contacts defective.	Replace defective relay.
ANTENNA SWITCHING AND TUNING CIRCUITS:		
24. No signal fed to antenna.	All continuity checks for each position of control Ⓐ can be made with the aid of figures 81 through 84.	Replace or repair defective component.
25. INDICATOR neon bulb will not light. Signal is known to be radiated.	Resistor R122 or R123 open.	Check resistance and replace faulty unit.
	Coil L104 open.	Check continuity of coil L104.
	Defective neon indicator I101.	Replace neon indicator.
OVERLOAD RELAY K102:		
26. Overload relay fails to open.	Contacts jammed or bent.	Replace relay K102.
27. Overload relay fails to close.	Coil K102A open.	Disconnect the lead from pin 1, and check resistance between terminals 1 and 2.
28. Relay chatters.	Contacts 15 and 16 of keying relay K101 are defective.	Clean and repair the contacts.
	Overload relay coil K102B is open.	Turn control Ⓔ to OFF. Turn control Ⓓ to PHONE. Check resistance between pin 3 and ground. It should be 67 ohms; if not, coil K102B is open.

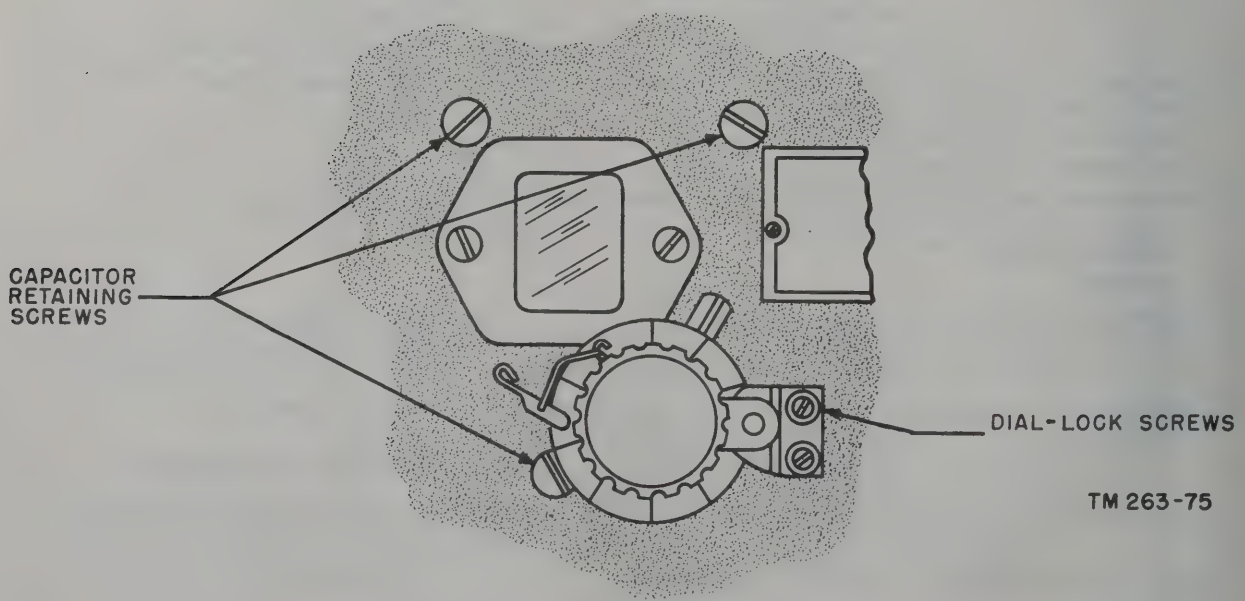

Figure 117. Transmitter capacitor and dial retaining screws.

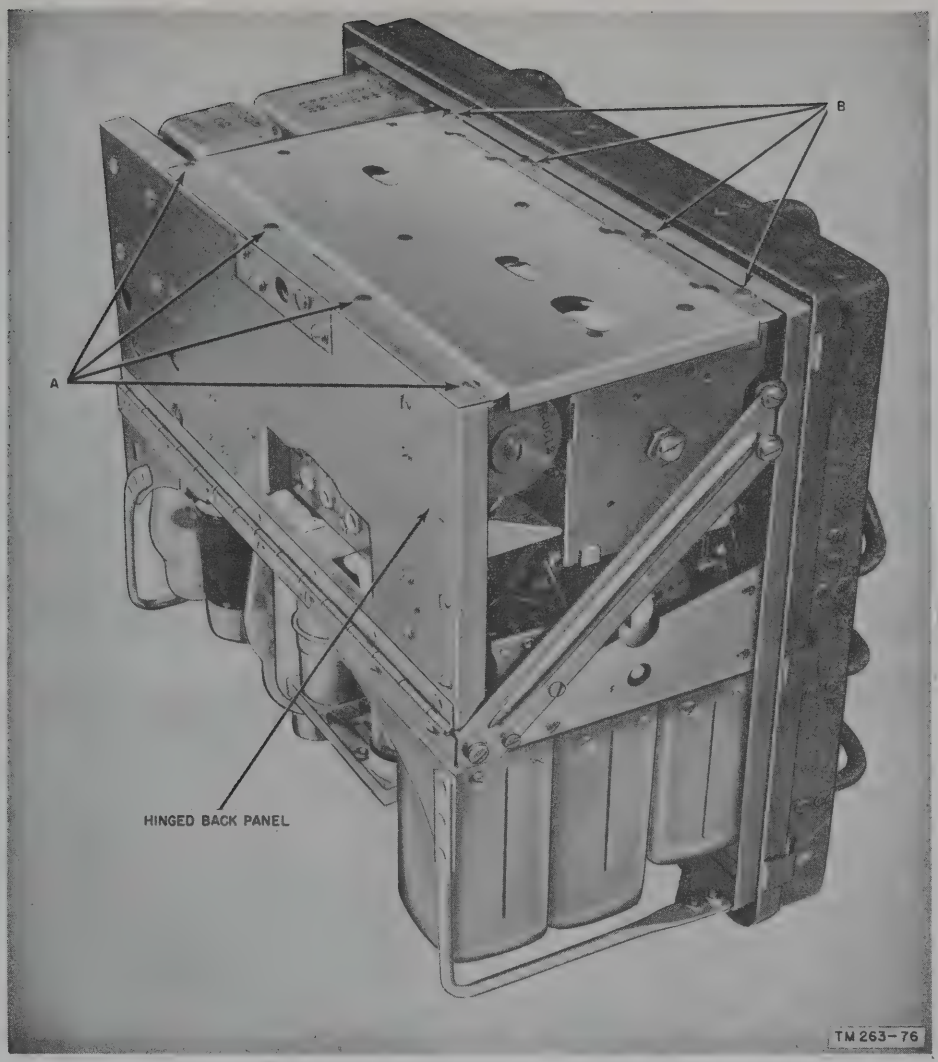

Figure 118. Location of screws A and B.

181. Transmitter Tube Socket, Voltage, and Resistance Diagram (fig. 124)

The dc voltage values given in the following diagram were made with the 20,000-ohm per volt range of the multimeter (par. 165), except those readings marked with an asterisk (*) which are measured with a vtvm. The following control settings were used:

a. Control Ⓕ at BAND 2–MO.

b. Control Ⓓ at CW–HI.

c. Control Ⓔ at SEND.

d. Supply voltage 500 and 105 volts to the plates and screen grids, and 6.3 volts to the filaments.

e. Control Ⓐ, at WHIP position, is tuned to the antenna being used. The resistance values given in the diagram were measured under the same switch conditions as the voltage charts except that the transmitter was disconnected from the receiver and *power supply,* and the mike and key were disconnected. Variations in switch positions are given in the chart at the bottom of the figure.

182. Resistance of Transmitter Coils and Transformers

To measure the resistance between several of the contacts listed, first it will be necessary to perform the steps given in the *condition* column. If these steps are not performed before the reading is taken, the value found will be in error.

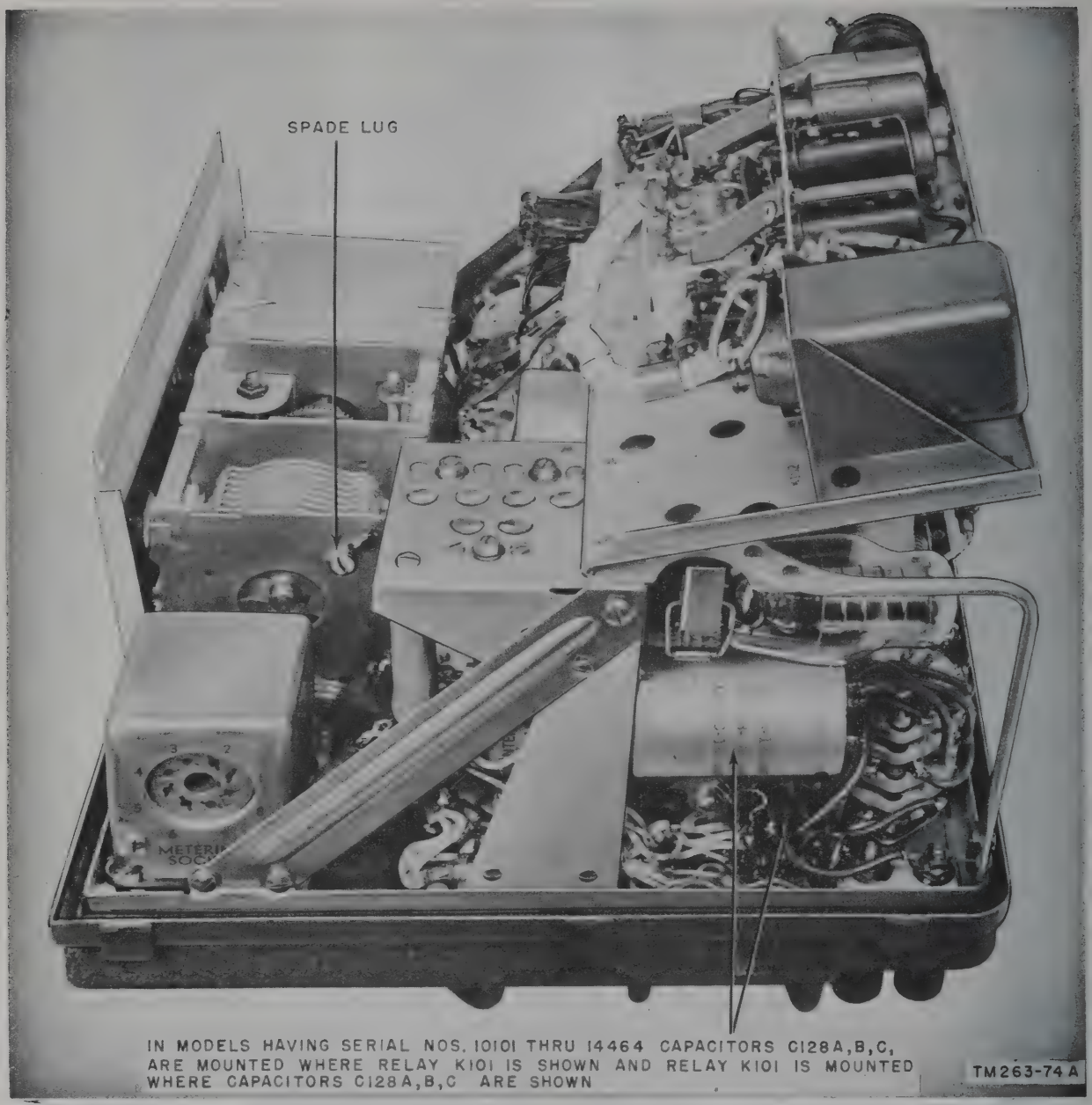
SPADE LUG
IN MODELS HAVING SERIAL NOS. 10101 THRU 14464 CAPACITORS C128A,B,C, ARE MOUNTED WHERE RELAY K101 IS SHOWN AND RELAY K101 IS MOUNTED WHERE CAPACITORS C128A,B,C ARE SHOWN
TM263-74A

Figure 119. Back panel of transmitter shown swung up to expose tuning capacitor.

Transformer or coil	Terminals	Ohms	Condition
T101	1–3	.5 or less	Control Ⓕ in BAND 1 position.
	4–5	.5 or less	
T102	1–3	.5 or less	Control Ⓕ in BAND 2 position.
	4–5	.5 or less	
T103	1–3	.5 or less	Control Ⓕ in BAND 3 position.
	4–5	.5 or less	
T104A BAND 1	1–3	.5 or less	Control Ⓕ in BAND 1 position.
T104B BAND 2	1–3	.5 or less	Control Ⓕ in BAND 2 position.
T104C BAND 3	1–3	.5 or less	Control Ⓕ in BAND 3 position.

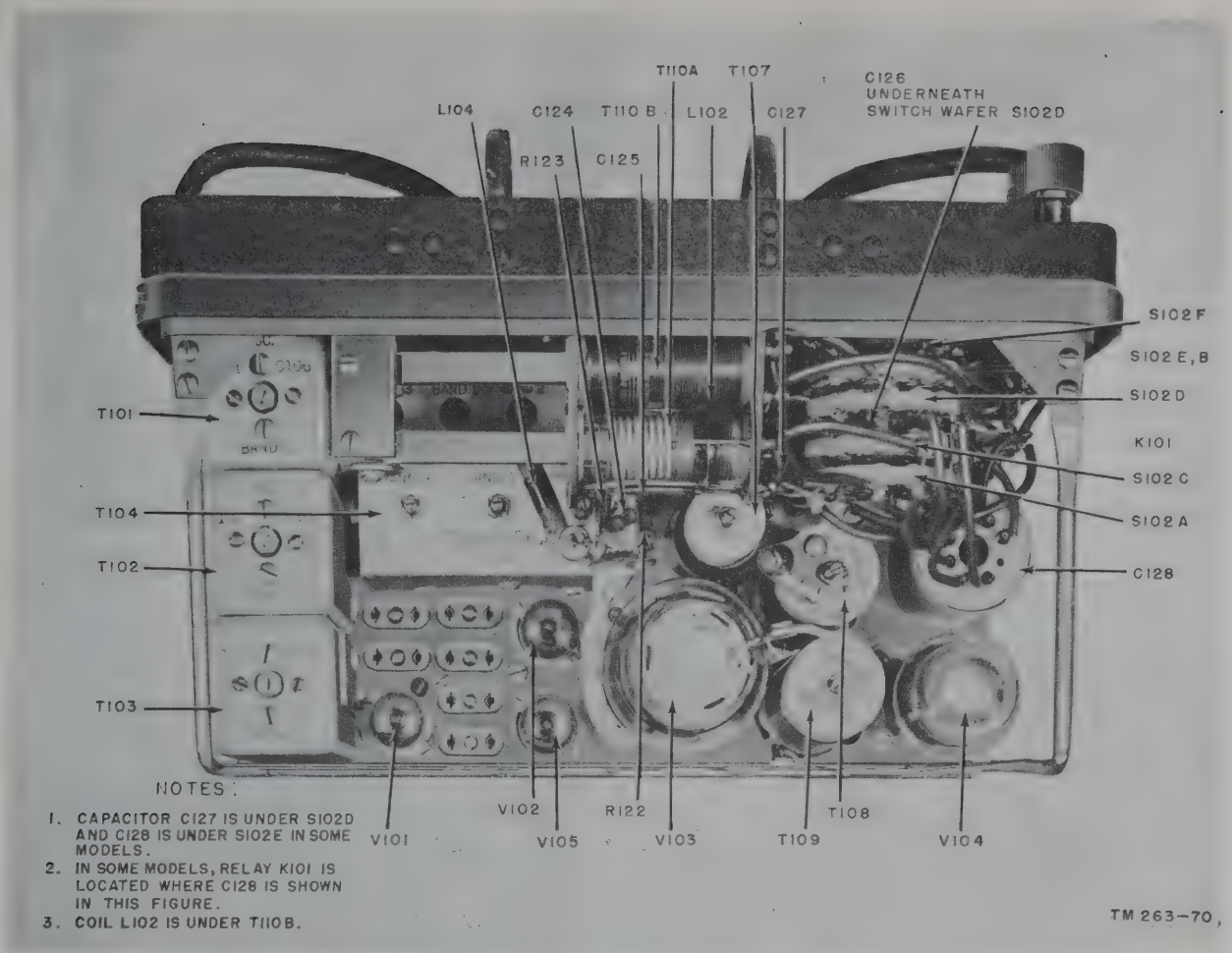

Figure 120. Transmitter parts location (top).

Transformer or coil	Terminals	Ohms	Condition
T107	1–3	.5 or less	Control Ⓕ in BAND 1 position.
T108	1–2	.5 or less	Control Ⓕ in BAND 2 position.
	3–4	.5 or less	Control Ⓕ in BAND 2 position.
T109	1–2	.5 or less	Control Ⓕ in BAND 3 position.
	3–2	.5 or less	Control Ⓕ in BAND 3 position.
T110A	1–2	.5 or less	
	3–4	.5 or less	
	1–3	.5 or less	
	5–6	.5 or less	
	6–7	.5 or less	
	5–8	.5 or less	
T112	1–2	30	Remove microphone plug from MIKE jack.
	3–4	1,100	
T113	1–2	725	Unsolder all leads to terminal 1.
	3–4	425	
T114	1–5	.5 or less	Control Ⓐ turned to position 11.
	3–4	2.0	
L101		10	
L102	1–2	.5 or less	

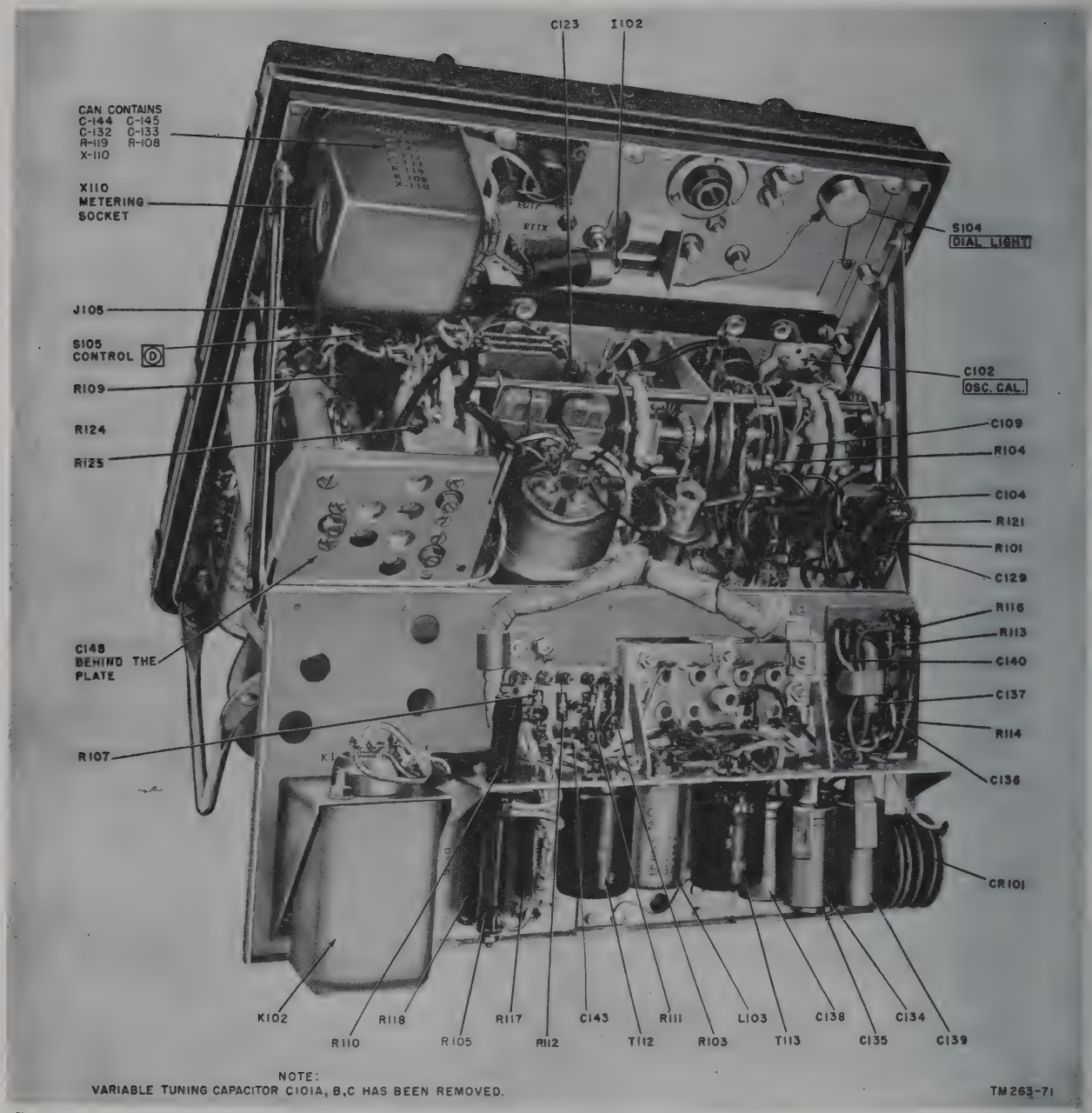

Figure 121. Transmitter parts location (bottom).

Transformer or coil	Terminals	Ohms	Condition
L103	1–2	600	
L104		1.0	
K101		11	Disconnect the lead to one of the K101 coil terminals.
K102A	1–2	5,400	Disconnect the lead to terminal 1 of relay K102.
K102B	3-chassis	67	Control Ⓔ at OFF position. Control Ⓓ at PHONE postion.

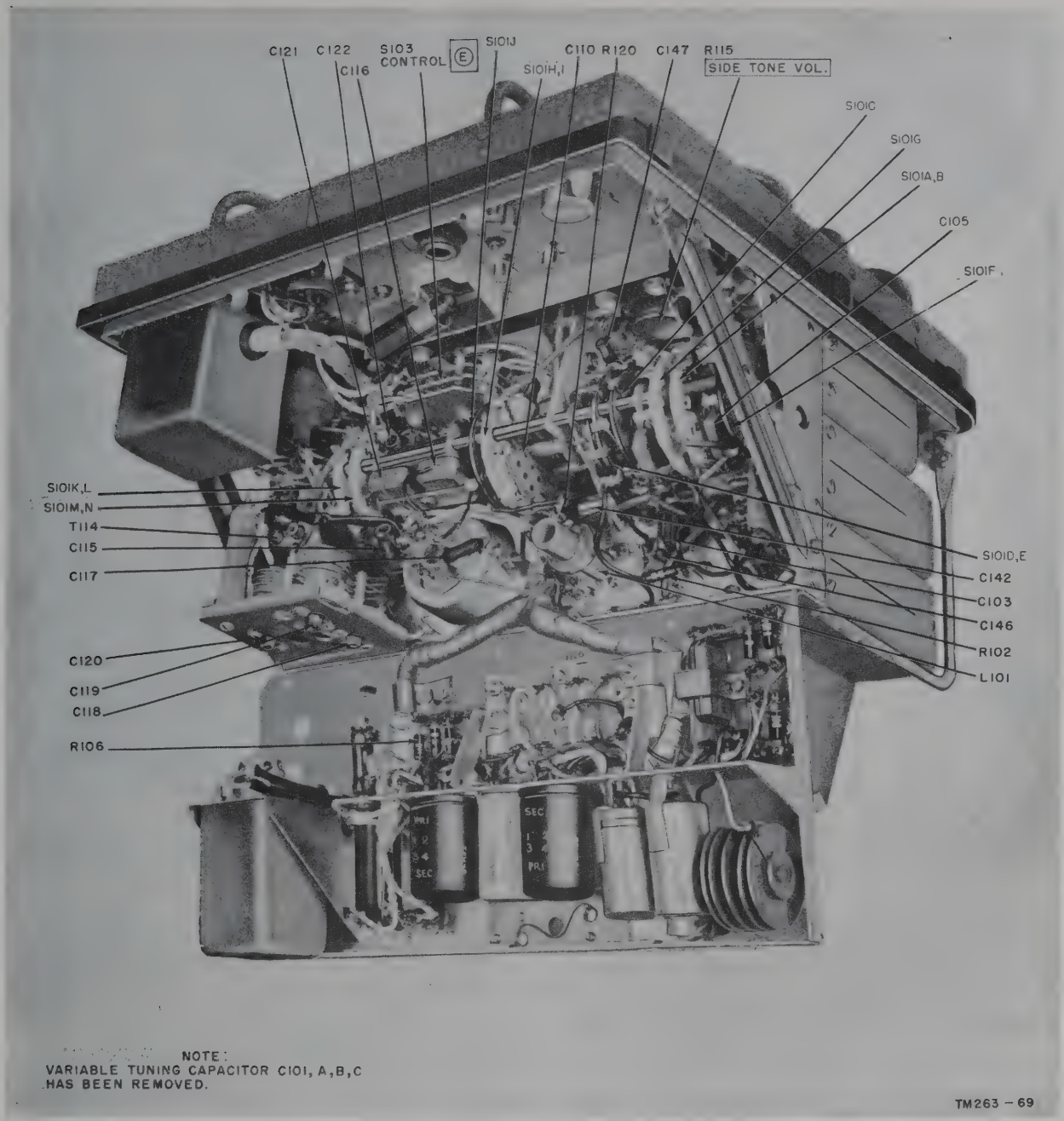

Figure 122. Transmitter parts location (bottom).

183. Sectionalizing Trouble in Generator GN–58–(*)

To test the generator under load conditions, it will be necessary to remove the top part of the housing. To accomplish this, remove the cover clamp lockscrews which fasten the cover clamps to the side of the housing. After opening the cover clamps, the top of the housing should come off easily when lifted straight up. Figure 126 shows Generator GN–58–A with the top cover removed. Next, loosen the screw which holds the terminal strip insulating cover in front of panel board 239 (fig. 128). This will expose the terminal board, and all voltage measurements can be made at full or no load,

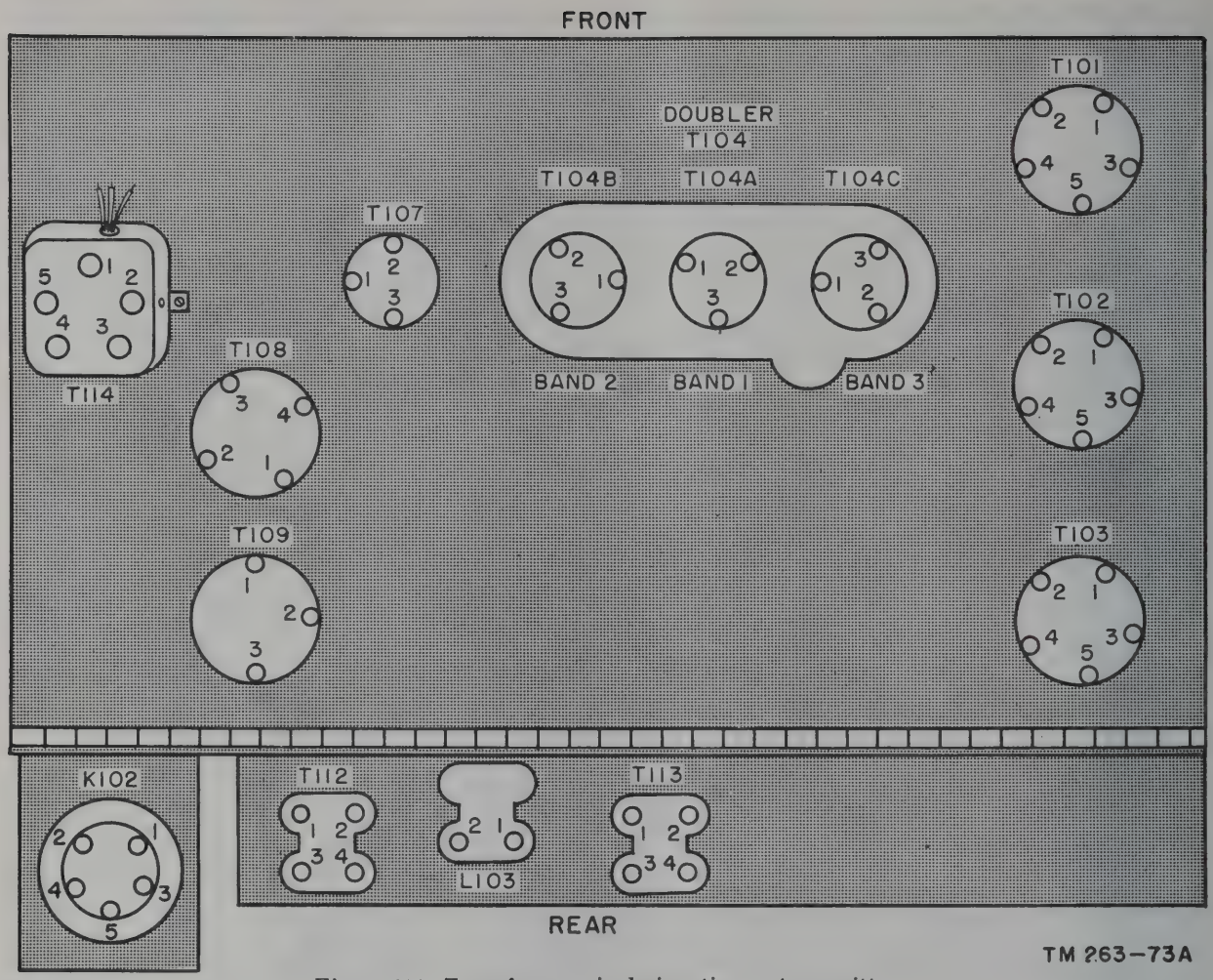

Figure 123. Transformer pin designation on transmitter.

using the contacts on the board. The measurements (fig. 168) are from each terminal to ground.

Warning: Some of the voltages in the generator are up to 425 volts. Do not touch any of the exposed terminals or other connections with both hands. Keep one hand completely away from the generator.

Symptom	Probable trouble	Correction
1. Incorrect voltages from terminals 32 and 21 to terminal 24. All other voltages are normal.	Brushes on hv armature are worn, and springs have lost their tension.	Check brushes and springs. Replace defective components. Be sure to fit new brushes (par. 184).
Warning: There are 425 volts across terminals 32 and 24.	Choke coil 228–1 is open.	Remove the brush to which coil 228–1 is connected and check the resistance of the coil.
	Capacitor 233–1 or 233–2 is shorted.	Further disassembly of generator is necessary. See paragraph 184.
	Choke coil 228–2 is open.	Further disassembly is necessary. See paragraph 184.
2. Incorrect voltage from terminals 21 to 24. Other voltages are normal.	Resistor 229 is open.	Check resistance of resistor 229.

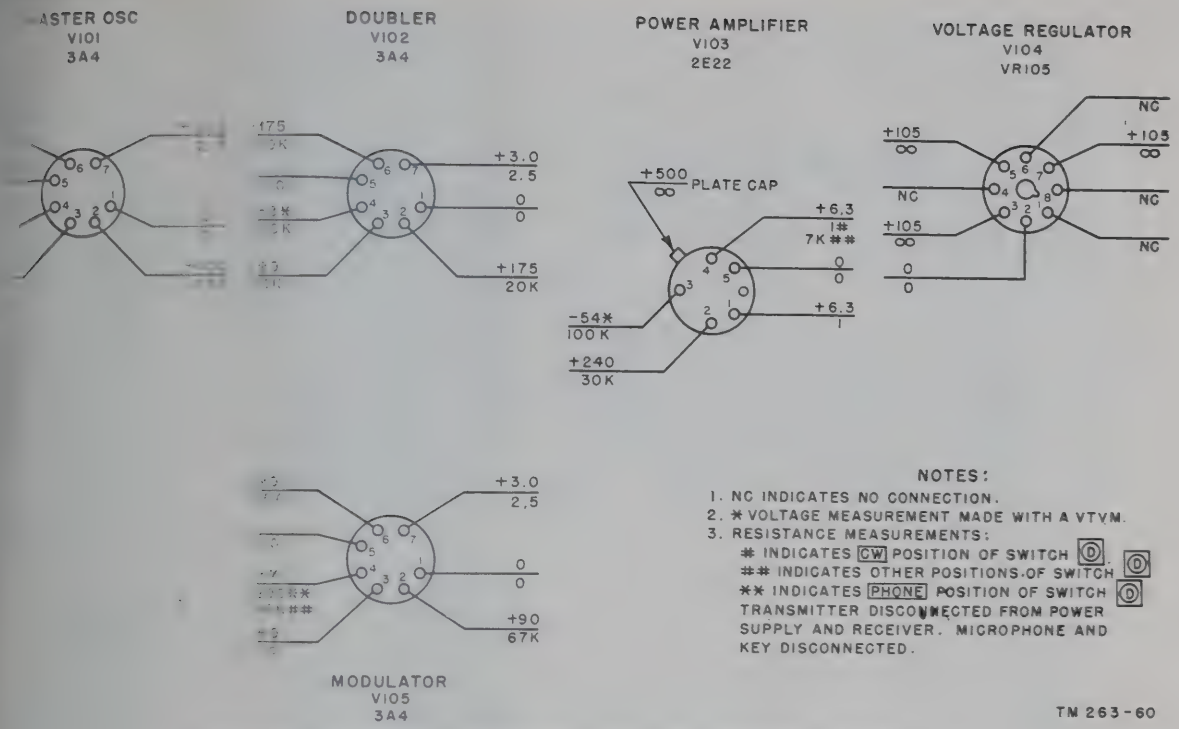

Figure 24. Transmitter tube socket voltage and resistance diagram.

Symptom	Probable trouble	Correction
Incorrect voltage between terminals 20 and 24.	Check the hv circuits (symptoms 1 and 2 above). If they check normal, then the lv circuit is defective, and further disassembly is necessary.	Refer to paragraph 184.
4. Incorrect voltage between terminals 23 and 24. All other voltages are normal.	Choke coil 225 open.	Refer to paragraph 184 and check continuity of choke 225.
5. No voltage output from any of the terminals.	Field coil 237–2 or 237–1 open.	Remove voltage regulator then check for continuity of field coils. Further disassembly is necessary.
	Voltage regulator is defective.	See paragraph 184.
	Resistor 245 open.	Check resistance of resistor 245.
	Resistor plaques 1 and 2 may be open.	See paragraph 184.
6. Voltage output varies within wide limits.	Voltage regulator defective.	See paragraph 184.

184. Disassembly of Generator Power Supply

To determine which component in the generator power supply is at fault, it may be necessary to remove the generator and chassis from the bottom half of the housing. The procedure is as follows:

a. Remove the crank handles and take the generator off its leg supports.

b. Remove the screws located around the flange of the right crankshaft coupling housing.

c. Insert the tip of a screwdriver between the generator housing and the coupling housing flange. Pry the assembly away from the housing as shown in figure 154.

d. Pull the crankshaft coupling (fig. 127) through the hole in the housing.

e. Remove the screws around the flange of the left crankshaft coupling housing.

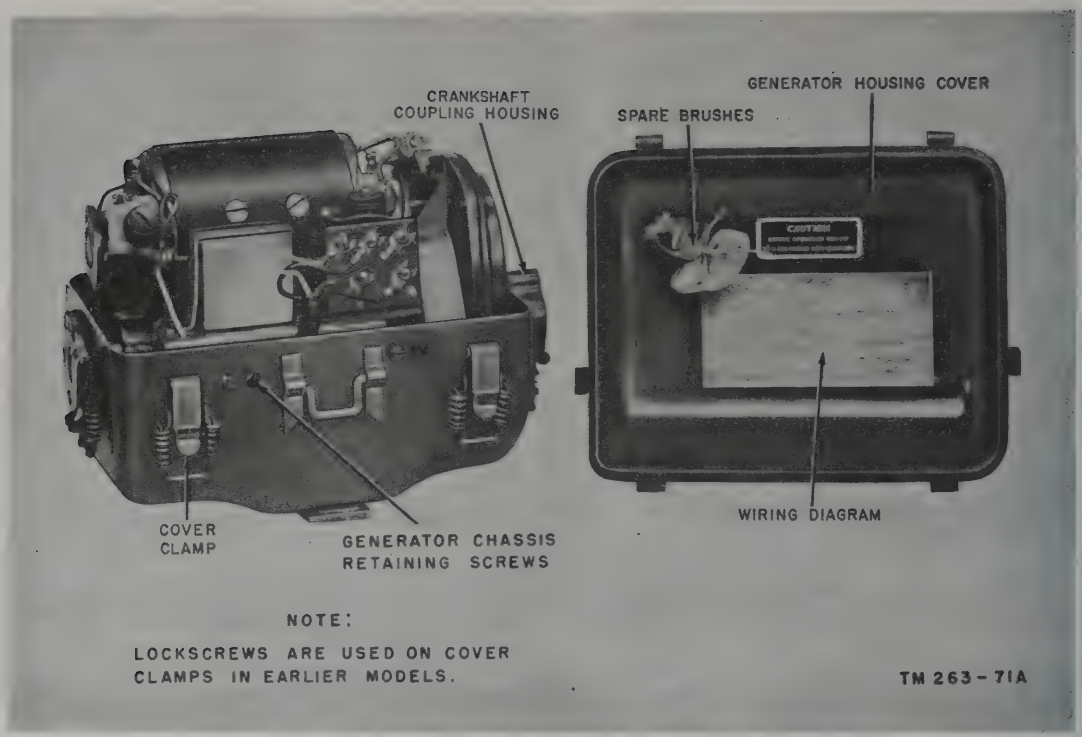

Figure 126. Generator GN–58–(*), top cover removed.

185. Localizing Trouble in Generator GN–58–(*)

Symptom	Probable trouble	Correction
1. Hv circuit defective.	Choke coil 228–1 or 228–2 is open.	Remove the positive hv brush. Check resistance of these coils.
	Capacitor 223–1 or 233–2 is shorted.	Replace capacitor.
2. Lv circuit defective.	Choke coil 225, 226, or 227 is opened.	Remove the positive lv brush. Check resistance of these coils.
	Capacitor 230 or 231 is shorted.	Replace capacitor.
3. Excessive sparking under brushes.	Worn, dirty, or cracked brushes.	Replace defective brushes. Be sure to fit new brushes to commutator. See figure 149.
4. Both high and low output voltages vary within wide limits.	Resistor 245 (fig. 169 and 170) defective.	Replace resistor 245.
	Voltage regulator defective.	Replace voltage regulator.

186. Resistances of Generator GN–58–(*) Choke Coils

Note. Remove Cord CD–1086 from power output receptacle 240 before taking resistance readings.

Coil	Ohms
225	10.5
226	.03
227	.12
228–1	7.
228–2	7.

187. Sectionalizing Trouble in Vibrator Power Supply PE–237

a. To check the voltage outputs of the power supply under load, remove the top cover and make measurements on the terminal board to which power output receptacle 734 is connected.

b. Set VOLTAGE CHANGE SWITCH 735 to the proper setting corresponding to the voltage of the battery to be used.

c. Remove the terminal board cover plate

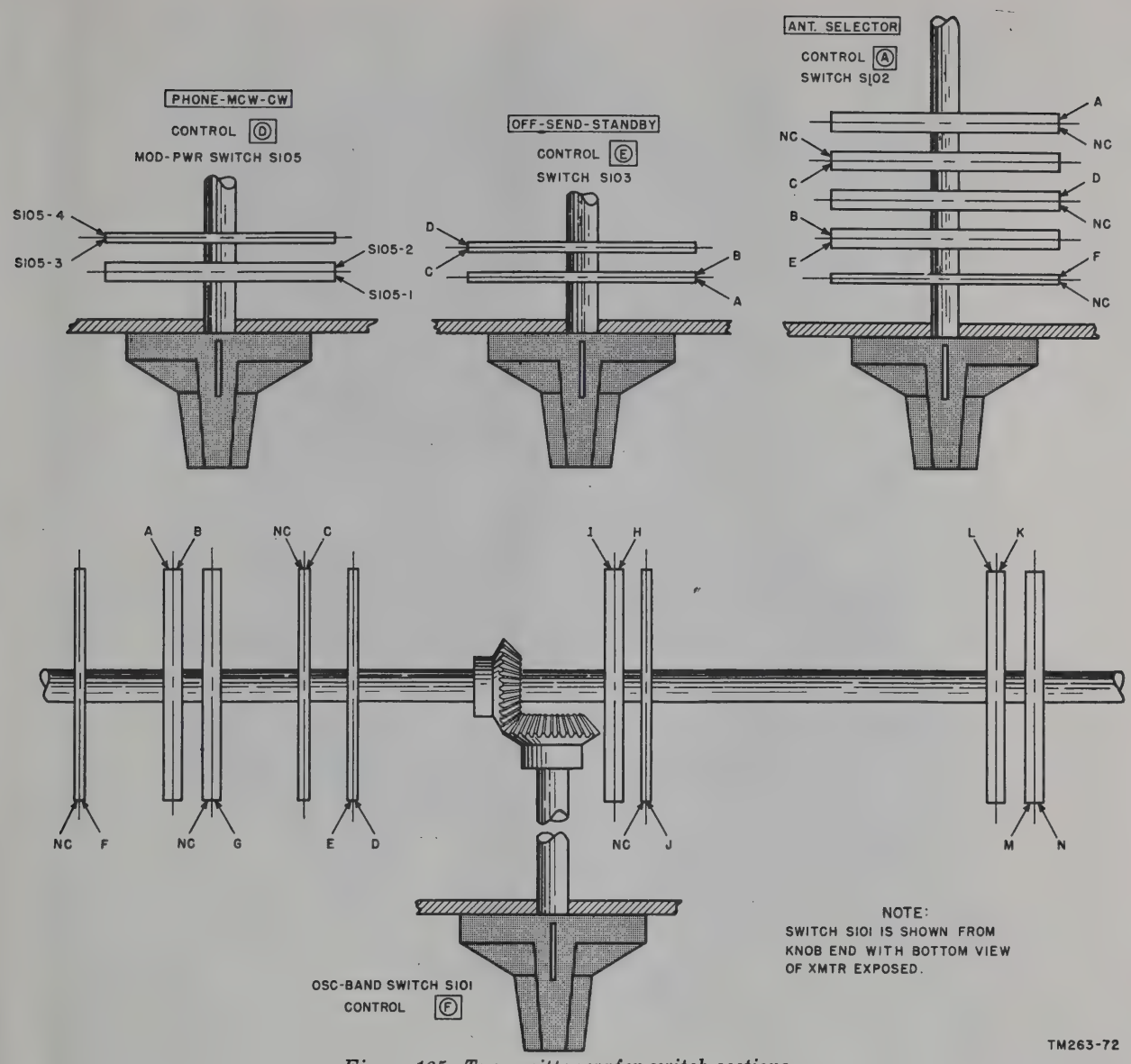

Figure 125. Transmitter wafer switch sections.

f. Repeat *c* above except to pry away the left crankshaft coupling.

g. The hole in the housing is not large enough for the left crankshaft coupling to be passed through it and out of the housing.

h. Remove the terminal strip insulating cover from in front of panel board 239, exposing the spade lug connections on the board (fig. 126).

i. Loosen the screws and remove the spade lugs completely from the board. Make a written note on the color coding of the wires connected to the terminals so that correct reconnection can be effected.

j. Remove the *chassis retaining screws* around the top of the lower half of the housing (fig. 126).

k. Again, with the screwdriver, pry the chassis away from the sides of the housing. Lift out the generator and filter assembly. With the generator removed from the housing, all the components are easily located (figs. 127–129).

Note. The spring that is attached to the Negative Temperature Coefficient resistor (par. 127*e*) is not to be adjusted unless the proper equipment is used, and then only when absolutely necessary. In no case is it a field adjustment.

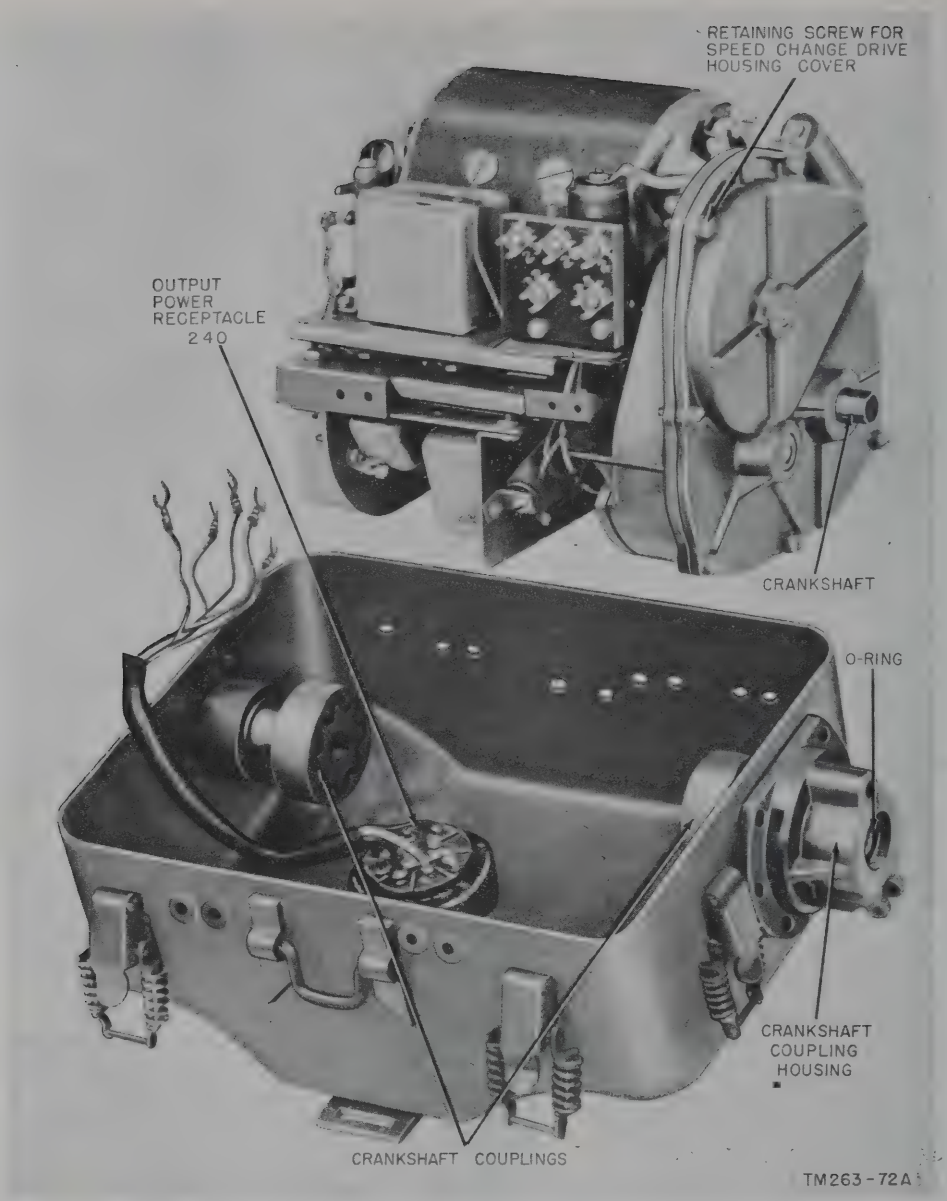

Figure 127. Generator GN–58–A, bottom half of housing removed.

(fig. 130), exposing the terminal board spade lug connections. The numbers on the board correspond to those on power output receptacle 734.

Warning: There are potentials up to 500 volts across some of the terminal board contacts. Be extremely careful when taking the following measurements.

Symptom	Probable trouble	Correction
1. No voltage output from any terminal of power output receptacle 734. No vibrator hum is heard. Control Ⓔ in transmitter on SEND or STANDBY.	Circuit breaker 728 is open or defective. Relay 726 contacts defective.	Further disassembly of power supply is necessary to check circuit breaker. See paragraph 189.

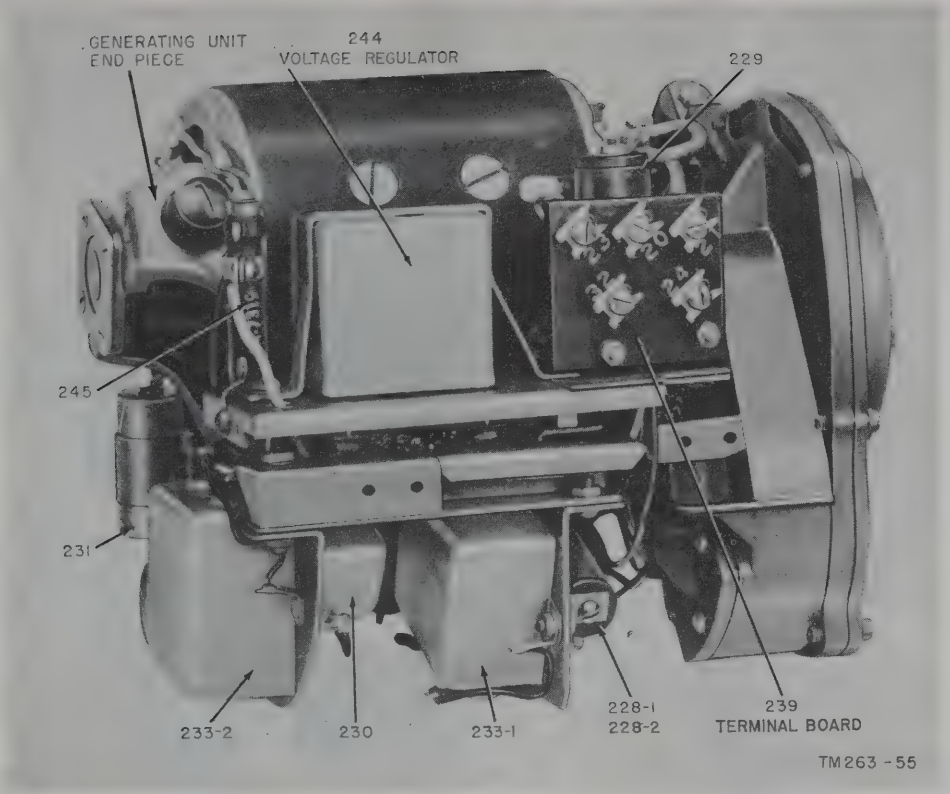

Figure 128. Generator GN–58–A, parts location (front).

Symptom	Probable trouble	Correction
2. Control Ⓔ on SEND position. No output voltage to ground terminals 20, 21, and 32. No loud hum is heard from the hv vibrator. Tube 1006 does not light. When no voltage appears on terminal 34, see item 2*b* in probable trouble column.	Vibrator VB16 is defective. Coil or relay 726 open. If low hum is heard from STANDBY vibrator, and there is normal voltage from terminals 23 and 33 of receptacle 734 to ground, then the contacts of relay 726 definitely have not been actuated, and relay coil 726 is probably open.	Replace vibrator VB16. Check continuity by: Removing Cord CD–1086 connector from output receptacle 734. Pressing ON button. Turning voltage selector switch to 6V. position. Placing one ohmmeter test prod on the positive (+) battery cable and the other in terminal 35 of power output receptacle 734. Reading should be 30 ohms. Infinite reading (∞) indicates (coil 726) is open. Refer to paragraph 189.
3. Control Ⓔ in SEND position. No voltage to ground on power output receptacle 734 terminals 20, 21, and 32. No hum heard. Voltages on terminals 22, 23, and 34 are normal.	Faulty vibrator VB16. If no vibrator hum is heard and vibrator has been replaced, something is defective in components leading to vibrator. Choke coil 704, 705–11, or 705–12 leading to vibrator VB16 may be open, if voltage outputs are normal on only one or two voltage selector switch positions.	Replace vibrator VB16. Check continuity of these coils. Remove battery. Remove Cord CD–1086. Remove vibrator VB16. Place one ohmmeter test prod on terminal 34 of power output receptacle 734. For the other test prod and also the position of the voltage selector switch, use the following table:

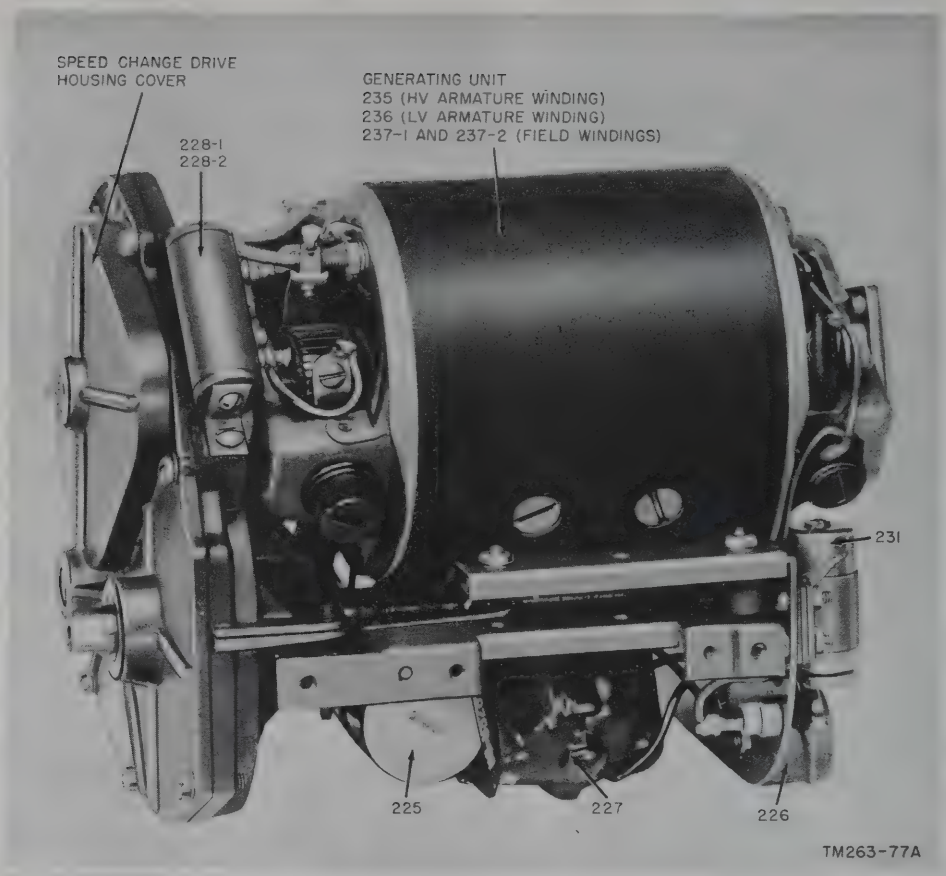

Figure 129. Generator GN–58–A, parts location. (rear).

Symptom	Probable trouble	Correction			
		Coil	Position of switch 735	Other test prod	Reading
		704	24V.	Terminal 16 of vibrator VB16 socket.	4 ohms
		705–11	6V.	Terminal 11 of vibrator VB16 socket.	1 ohm
		705–12	12V.	Terminal 16 of vibrator VB16 socket.	1 ohm
		If reading of infinity (∞) is obtained for a coil, that coil is open. Further disassembly is necessary. See paragraph 189.			

Symptom	Probable trouble	Correction
4. Control Ⓔ in SEND position. Loud hv vibrator hum heard. Tube 1006 does not light.	Faulty hv rectifier Tube 1006. Major internal defect.	Replace tube. See paragraph 189.
5. Control Ⓔ on STANDBY. No voltage output on terminals 22, 23, and 33. On STANDBY, no vibrator hum is heard. Voltage outputs are normal in SEND position of control Ⓔ.	Relay coil 727 open.	Check continuity of coil 727. Disconnect battery and press ON button. Remove Cord CD–1086. Turn voltage selector control to 6V. position. Place one ohmmeter test test prod on the positive (+) battery lead and the other prod into terminal 23 of power output receptacle 734. Reading should be approximately 10.5 ohms. If infinite reading (∞) is obtained, then relay coil 727 is open.
6. Control Ⓔ on STANDBY. No voltage output on terminal 33. Normal voltage on other terminals.	Defective standby rectifier tube 1005. Major internal defect. Vibrator VB1 defective. Choke coil 705–13 open.	Replace tube. See paragraph 189. Replace vibrator VB1. See paragraph 189.

188. Disassembly of Vibrator Power Supply PE–237

Before any further troubleshooting is at tempted, remove the unit from the housing. Proceed as follows:

a. Remove the rubber-covered cables which connect the power supply to the vehicular battery.

(1) Unscrew the clamp nuts on the battery cable bushings (fig. 130).

(2) Remove the nuts holding the battery cable lugs to the terminals on the vibrator chassis.

(3) Lift the lugs off the screws and pull the cables through the bushings, completely out of the vibrator housing (fig. 131).

Note. On some models, the bushing, gasket, flat washers, and the hexagonal nut holding these components, must be removed to pull the cable out.

b. Remove power output receptacle 734.

(1) Loosen the screws on the terminal board numbered from 20 to 35, and remove the spade lugs secured by these screws. Do not remove the screws or they may be lost. Make a written note of the color coding on the wires so that reconnection will be simplified. The color coding of the wires on top and bottom of the terminal board are identical for some units.

(2) Remove the screws around the outside flange of receptacle 734. Gently pry the flange away from the housing, and pull the entire receptacle out, including the wires attached to its terminals (fig. 131).

c. Remove the bushings, washers, and hexagonal nuts.

(1) Remove two hexagonal nuts and two flat washers from the threaded bushings.

(2) Remove two threaded bushings with the neoprene and flat washers.

d. Remove the power unit chassis from the housing.

(1) Turn Vibrator Power Supply PE–237 upside down and unscrew the six nuts on the bottom of the housing.

(2) The chassis should no longer have any connections to the housing. Lift the housing up and away from the chassis.

e. The bottom of the chassis has metal cross bracing members screwed to it. The bracing is held by screws along the sides of the chassis and two screws in the middle of the bracing (fig. 132).

(1) Unscrew the 12 screws along the sides of the chassis which hold the ends of the bracing bands. For some units, also remove the 6 flat washers and 6 neoprene washers.

(2) Unscrew the two screws in the center cross brace.

(3) Lift the bracing completely off the bottom of the chassis, exposing the wiring underneath.

189. Localizing Trouble in Vibrator Power Supply PE–237

Symptom	Probable trouble	Correction
STANDBY CIRCUIT:		
1. No voltage output on terminal 33. Voltage normal on terminals 22 and 23. Hum is heard from vibrator VB1. Control Ⓔ on transmitter is set at STANDBY.	*a.* There may be a disconnection between primary of power transformer 702–1 and contacts 2 and 3 of vibrator VB1.	*a.* Remove vibrator VB1, and check continuity of choke coils 705–13, 705–14, and 705–15. Check primary of transformer 702–1 (approximately 27 ohms). To check for continuity of switches 735–2C and 735–3A, place one test prod in contact 2 and the other in contact 3 of vibrator socket 731.
	b. Defective secondary coils of transformer 702–1.	*b.* Remove tube 1005, and check for continuity at socket 730 between pins 3 and 5 (approximately 1,500 ohms) and pins 6 and 8 (approximately 3 ohms).
	c. Defective standby rectifier tube 1005.	*c.* Replace tube.

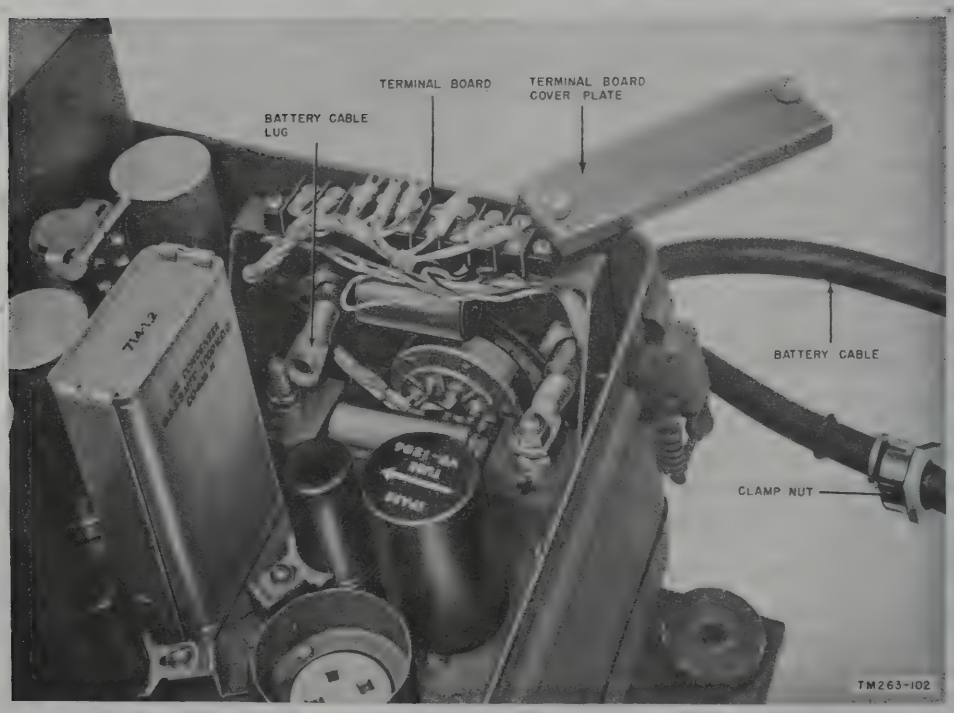

Figure 130. Vibrator Power Supply PE–237, terminal board and battery cable connections.

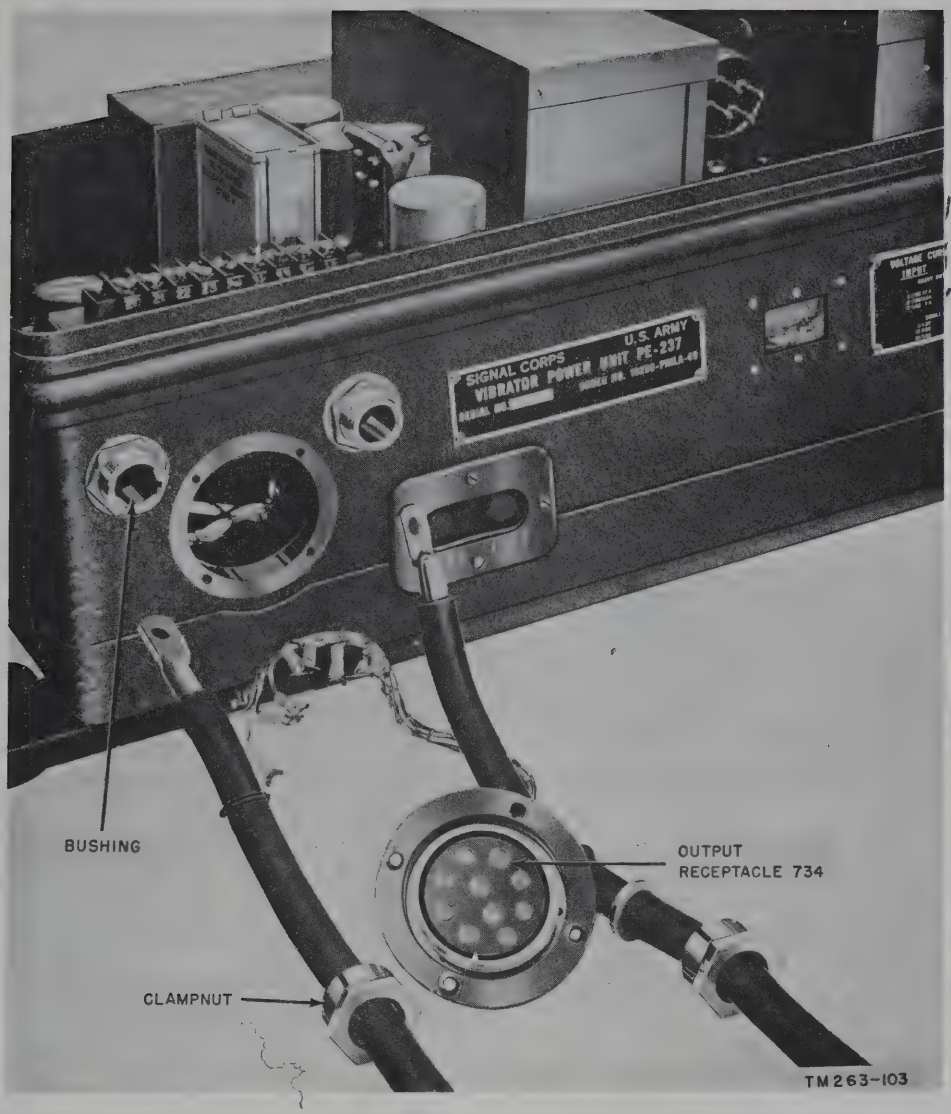

Figure 131. Vibrator Power Supply PE–237, battery cables and power output receptacle 734.

Symptom	Probable trouble	Correction
	d. Choke coil 702–4 or resistor 737 may be open.	*d.* Remove standby rectifier tube and check continuity by placing one test prod on terminal 33 of the terminal strip and the other prod at contact 6 of socket 730. A reading of 2,000 ohms should be obtained. If an infinite (∞) reading is found, check choke coil and resistor individually. If short is found, replace capacitors 707–1, 707–2, and 707–3.
	e. Shorted buffler capacitor 711.	*e.* Replace capacitor 711 with one of exactly the same capacity.

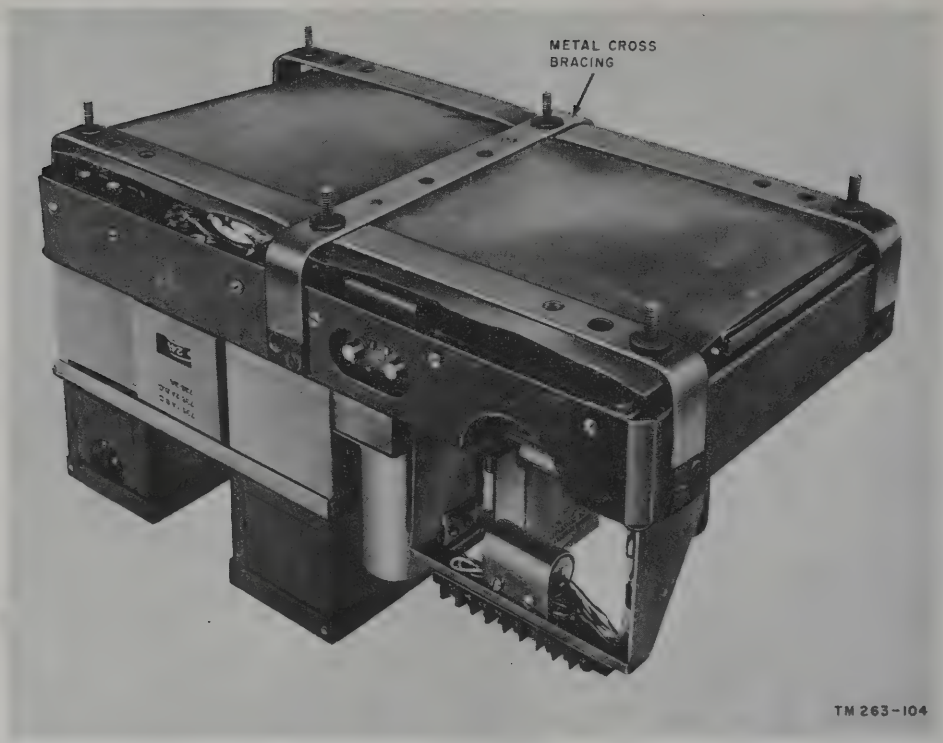

Figure 132. Vibrator Power Supply PE–237, cross bracing on bottom of chassis.

Symptom	Probable trouble	Correction
		Note. Should this capacitator become defective, replace it as soon as possible with a capacitator having the same capacity rating. If the same capacity is not used, the life of the vibrator will be greatly reduced.
RECEIVER FILAMENT SUPPLY:		
2. No voltage on terminals 22 and 23 on SEND position only of control Ⓔ.	2*a*. The 3.6-ohm section of resistor 719 is probably open.	2*a*. Check resistance of the 3.6-ohm section by placing the test prods directly across it.
	b. If the voltage output of terminal 33 is not normal, then relay coil 727 is probably open.	*b*. Check the resistance of coil of relay 727.
3. No voltage on terminal 22 and 23 on SEND or STANDBY position of control Ⓔ. No voltage on terminal 33.	3*a*. The 2.71-, 13.3-, or 26.7-ohm section of resistor 719 is open.	3*a*. Check resistance of resistor 719.
	b. Choke coil 703 is open.	*b*. Check resistance of choke coil 703.
4. No voltage on terminals 22 and 23 in SEND or STANDBY position of control Ⓔ. Voltage on terminal 33 is normal.	4. Capacitor 708–1 or 708–2 is shorted.	4. Replace capacitors 708–1 and 708–2.

Symptom	Probable trouble	Correction
KEYING RELAY SUPPLY CIRCUIT:		
5. No voltage on terminal 34, in SEND position of control Ⓔ. All other voltages are normal.	5*a*. Contacts of relay 726 are defective. *b*. Capacitor 707–1 is shorted.	5*a*. Inspect contacts. *b*. Replace capacitor units 707–1, –2, and –3.
PLATE AND SCREEN GRID VOLTAGE SUPPLIES:		
6. No voltage output on terminals 20, 21, and 32. Hv rectifier tube 1006 does not light. No hv vibrator VB16 hum is heard. Voltage output is normal on STANDBY position of control Ⓔ.	6*a*. It is assumed that relay 726 contacts and choke coils 704, 705–11, and 705–12 have been checked. *b*. Vibrator VB16 is defective. *c*. Capacitor 709–1, 709–2, 710–11, 710–12, 710–13, or 741 may be shorted. *d*. Contacts of time relay delay 743 shorted out (24V. position of switch 735).	6*a*. See paragraphs 187, symptom 2. *b*. Replace vibrator VB16 (*c* below). *c*. Remove vibrator VB16 and check the capacitor for shorts. *d*. Replace relay 743. *Note.* Vibrator VB16 may be damaged permanently if an attempt is made to operate this unit on the 24V. position with the contacts of the time delay relay shorted out.
7. No voltage output on terminals 20, 21, and 32. Tube 1006 does not light. Loud hum is heard from vibrator VB16.	7. There may be a break in the line between terminals 4 of transformers 700–1, –2, –3, –4, and 738, and switch 735–4A, –5A, –6A, –7A, and –8A.	7. Remove battery and press ON button. Check for continuity between positive (+) battery cable and terminal 4 of each of the transformers.
8. No voltage output on terminals 21 and 32. All other terminal voltages are normal. Hv rectifier tube 1006 filament does not light.	8*a*. Defective tube. *b*. Defective filament circuit. Choke coil 705–16 or 705–17 may be open. Secondary of transformer 738 may be open. *c*. Primary of transformer 738 may be open. Choke coil 705–3 or 705–4 may be open. *d*. One of capacitors 716–1 through 716–5, 739–1, and 739–2 may be shorted.	8*a*. Replace tube. *b*. Remove tube 1006, and check the resistance between pins 1 and 4 of socket 733. The reading should be close to zero. *c*. Remove vibrator VB16 from its socket and turn voltage selector switch to 24V. Check the resistance between terminals 3 and 4 of the vibrator socket. The reading should be approximately 2.5 ohms. If not, check each item individually. *d*. Replace capacitors. *Note.* If capacitators 716–1 through 716–5 become defective replace them with others of exactly the same capacity rating; otherwise, the vibrator contacts will be subjected to severe arcing.
9. No voltage output on terminals 21 and 32. Hv rectifier tube filament lights up. All other voltages are normal.	9*a*. Discontinuity in hv rectifier plate circuit. Choke coil 725–1 or 725–2 may be open. One of the secondary windings of transformer 700–1 through 700–4 may be open. *b*. Choke coil 725–3 may be open. *c*. Choke coil 702–3 may be open.	9*a*. Remove tube 1006 from socket 733. Check resistance between terminals 2 and 3 of the socket. The reading should be approximately 200 ohms. If this is not obtained, check each choke and plate circuit secondary coil individually. *b*. Check resistance of coil 725–3. The reading should be approximately 10 ohms. *c*. Check resistance of coil 702–3. The reading should be approximately 20 ohms.

Symptom	Probable trouble	Correction
	d. Capacitors 714–1, 714–2, 715, or 736 may be shorted.	*d.* Replace capacitor.
10. No voltage output on terminal 21. All other voltage outputs are normal.	10. Resistor 721–1 or 721–2 is open.	10. Check resistance from terminal 21 through terminal 32.

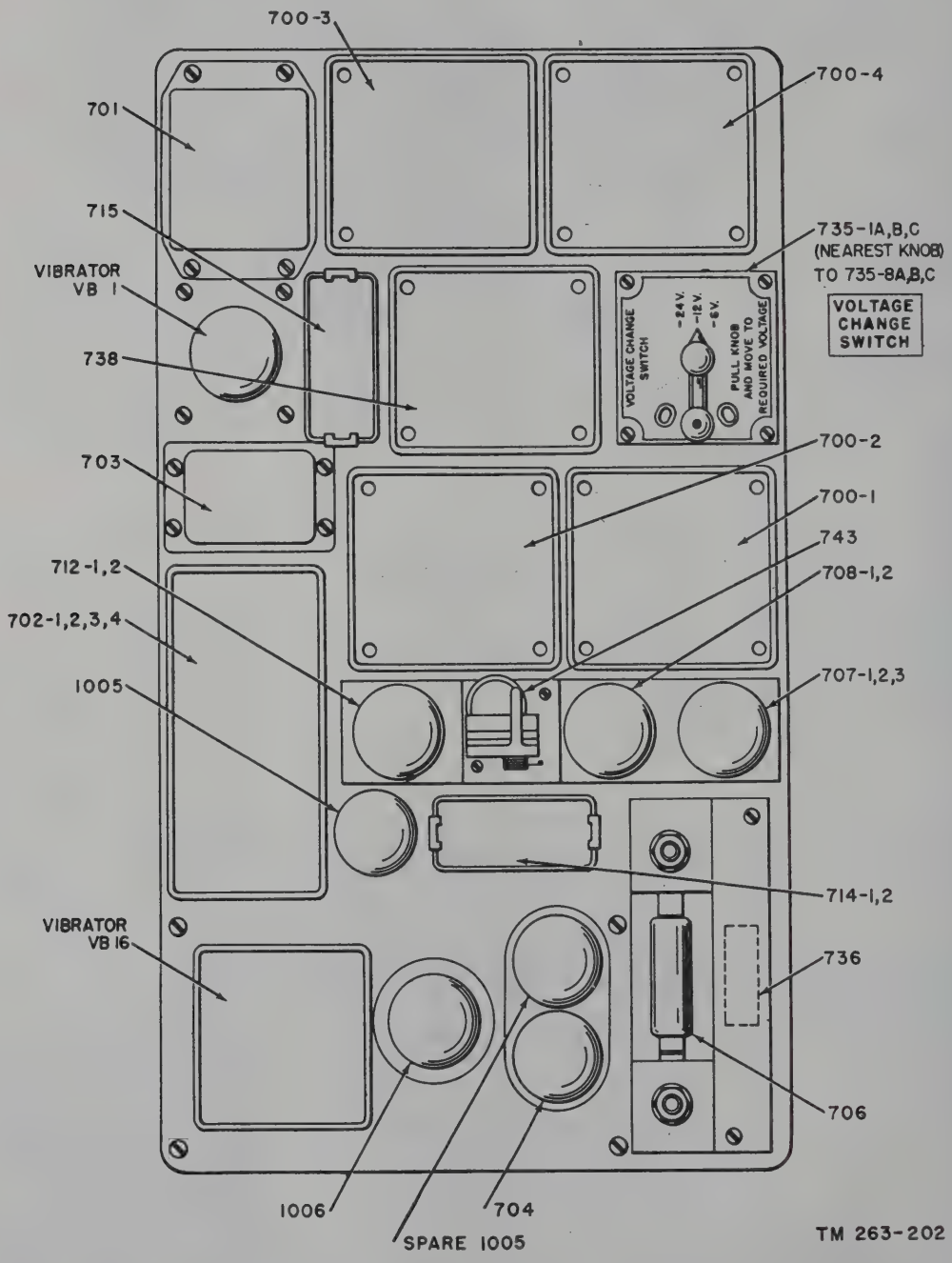

Figure 133. Vibrator Power Supply PE–237 (later models), top view, for parts identification purposes.

Symptom	Probable trouble	Correction
TRANSMITTER FILAMENT VOLTAGE SUPPLY CIRCUIT:	See figure 99.	
11. No voltage on terminal 20. All other voltage outputs are normal.	11*a*. Resistor 724 open. *b*. Choke coil 702–2 open. *c*. The selenium rectifier circuit may be open.	11*a*. Check resistance of resistor 724. *b*. Check resistance of coil 702–2. *c*. Using the lowest ohmmeter range only, place the test prods on terminals 20 and 24 on the terminal strip. The reading should be about 13 ohms. When the test leads are reversed, the reading should be above 1,000 ohms.

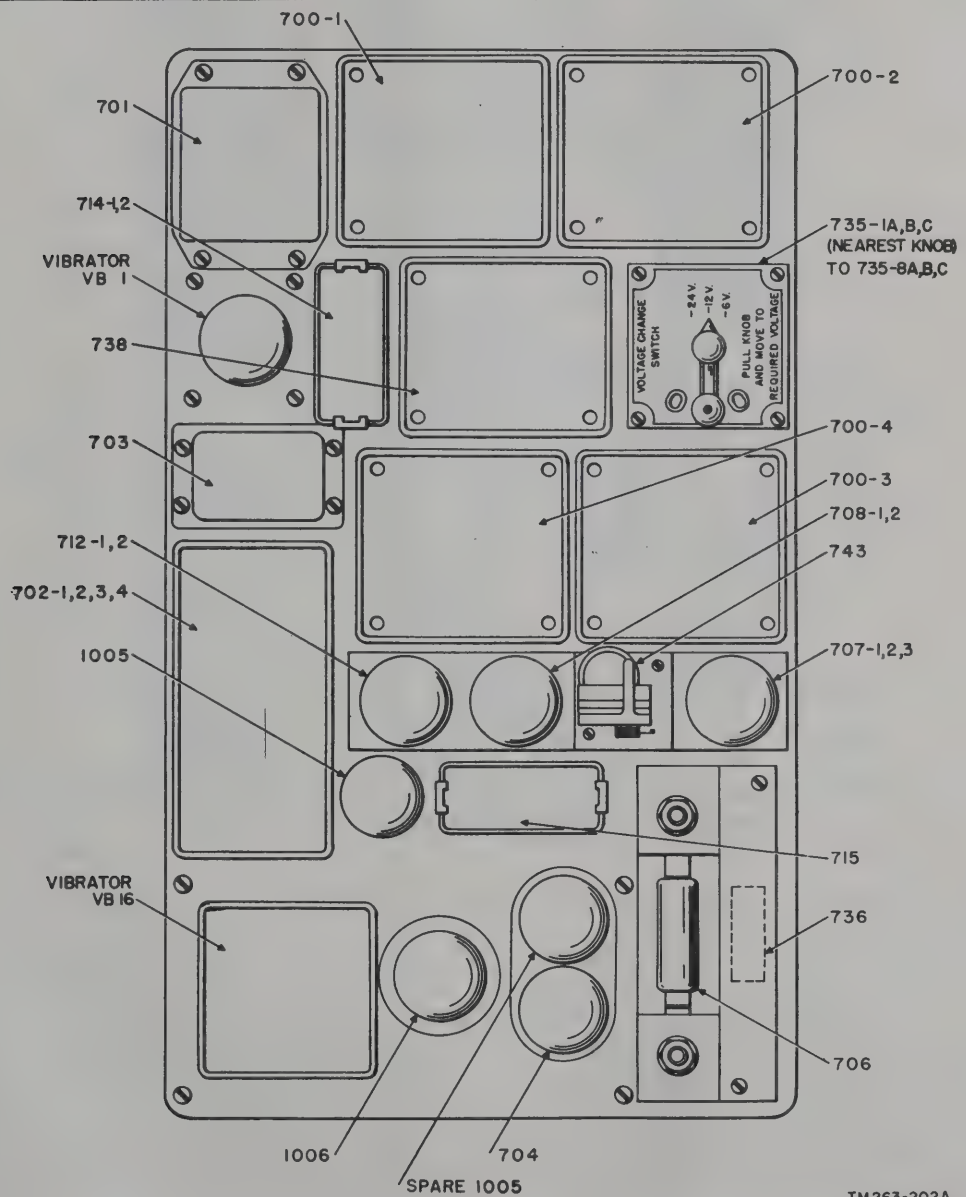

Figure 134. Vibrator Power Supply PE–237 (early models), top view for parts identification purposes.

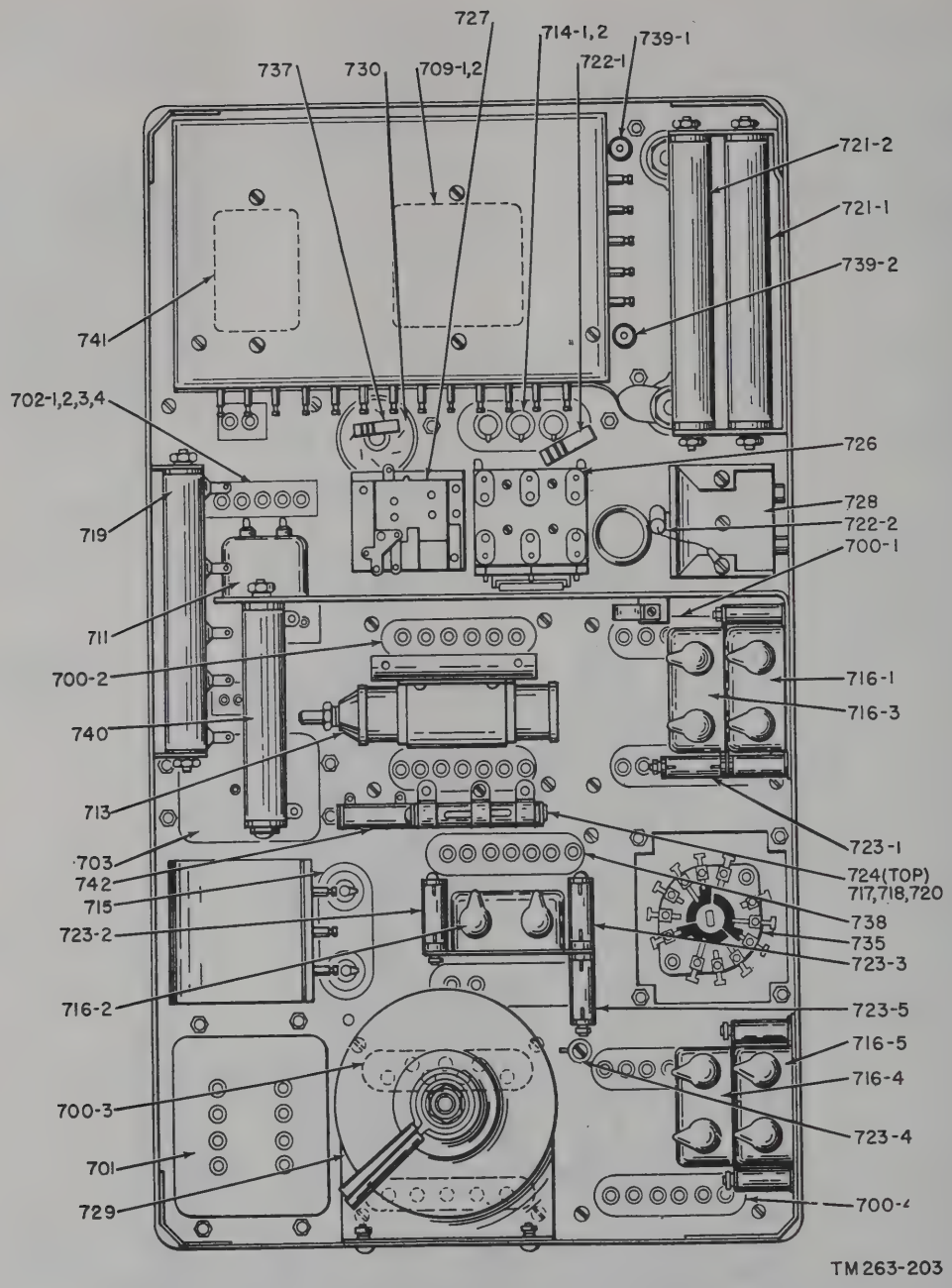

Figure 135. Vibrator Power Supply PE–237 (later models), bottom view, for parts identification purposes.

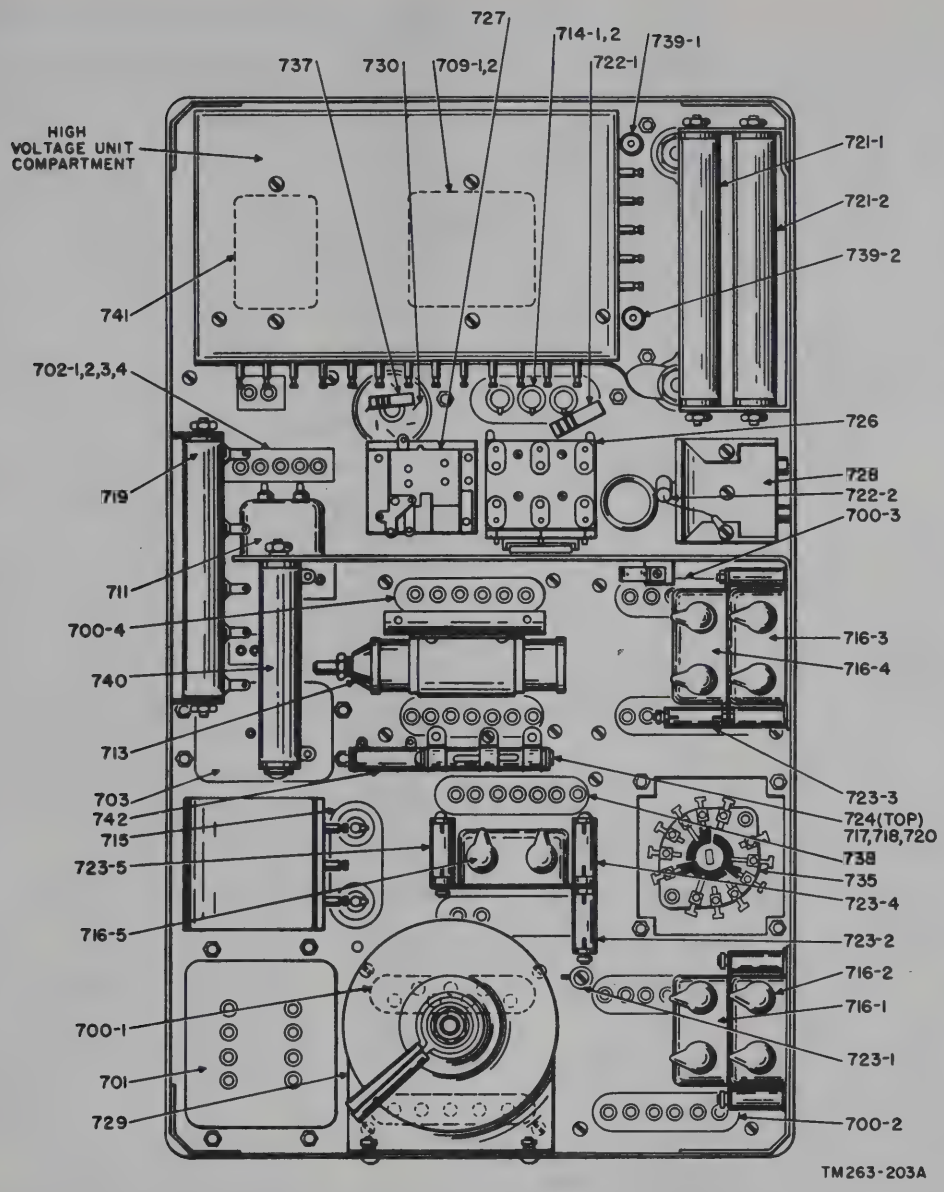

Figure 136. Vibrator Power Supply PE–237 (early models), bottom view for parts identification purposes.

190. Disassembly of Dynamotor-Power Supply DY–88/GRC–9

a. Loosen the eight clamps attached to the front panel, remove the cover, then pull the chassis out of the cover.

b. Remove the four screws holding each of the two front brush covers (fig. 141) to the dynamotor. The 12- and 24-volt brushes (fig. 144) are now accessible.

c. Remove the two screws holding the rear brush cover to the dynamotor. The 6- and 580-volt brushes are now available.

d. Capacitors C214, C215, and C229 (fig. 142) and relays K202, K203, and K204 (fig. 143) are located on the under side of the chassis, toward the rear of the unit. To reach the capacitors and relays, first remove the two screws holding bracket 0214 to the unit. Re-

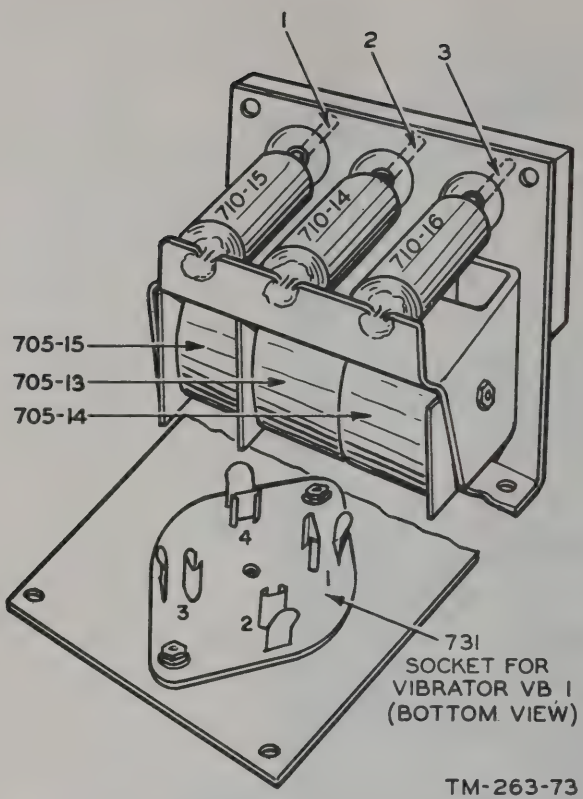

Figure 137. Shielded compartment for standby vibrator socket and filter unit, viewed from bottom of chassis.

move 0214. The capacitors and relays now can be removed.

Note. On some units, resistor R211 is mounted away from the chassis apron, and the location of capacitors C214 and C215 is reversed.

Caution: If the filter capacitors are to be removed, tag them with the serial number of the power supply. If capacitors from another supply are substituted, loss of frequency calibration of the receiver-transmitter is possible.

191. Troubleshooting Chart for Dynamotor-Power Supply DY–88/GRC–9

To troubleshoot the dynamotor power supply, remove the power supply from the case. Connect the power supply to a radio set known to be good. Set voltage selector switch control H206 (fig. 143) to the proper setting corresponding to the voltage of the battery to be used. Check the DYN. FUSE. Be sure it corresponds to the voltage of the battery to be used (par. 37*b*(6)). Note that the terminals on output receptacle J202 are numbered. Use these terminals to check the output voltage of the dynamotor power supply.

Symptom	Probable trouble	Correction
1. No voltage output from any terminal of J202. No vibrator hum is heard. Dynamotor D201 does not turn. Control Ⓔ in SEND or STANDBY.	Fuse F201 or F202 open.	Replace fuses if defective. If F202 continues to blow, check C218, C219, C222, and C223 for short.
2. No voltage output at terminal 22 and 23 of J202. Control Ⓔ in SEND or STANDBY.	Fuse F202 open.	Replace F202 if open.
	Resistor F210 open.	Replace R210 with spare.
	Relay K203 coil open.	Replace K203 if coil is open.
	Capacitor C215 or C216 shorted.	Replace C215 or C216 if shorted.
	Resistor R202 open (12-volt operation).	Replace R202 if open.
	Resistor R202 or R203 open (24-volt operation).	Replace R202 or R203 if open.
3. No voltage output from terminal 33 of J202. Vibrator does not hum. Control Ⓔ in STANDBY.	Fuse F202 open.	Replace fuse if open.
	Vibrator E201 defective.	Replace vibrator with spare.
	Contacts 3 and 7 of K203 not closing.	Check battery voltage at terminal 7 of K203. Replace relay if defective.
	For series-drive vibrator:	
	Coil 1202 open.	Replace L202 if open.
	Capacitor C217 or C220 shorted.	Replace C217 or C220 if shorted.
	Resistor R204 open (12-volt operation).	Replace R204 if open.
	Resistor R204 or R205 open (24-volt operation.)	Replace R204 or R205 if open.

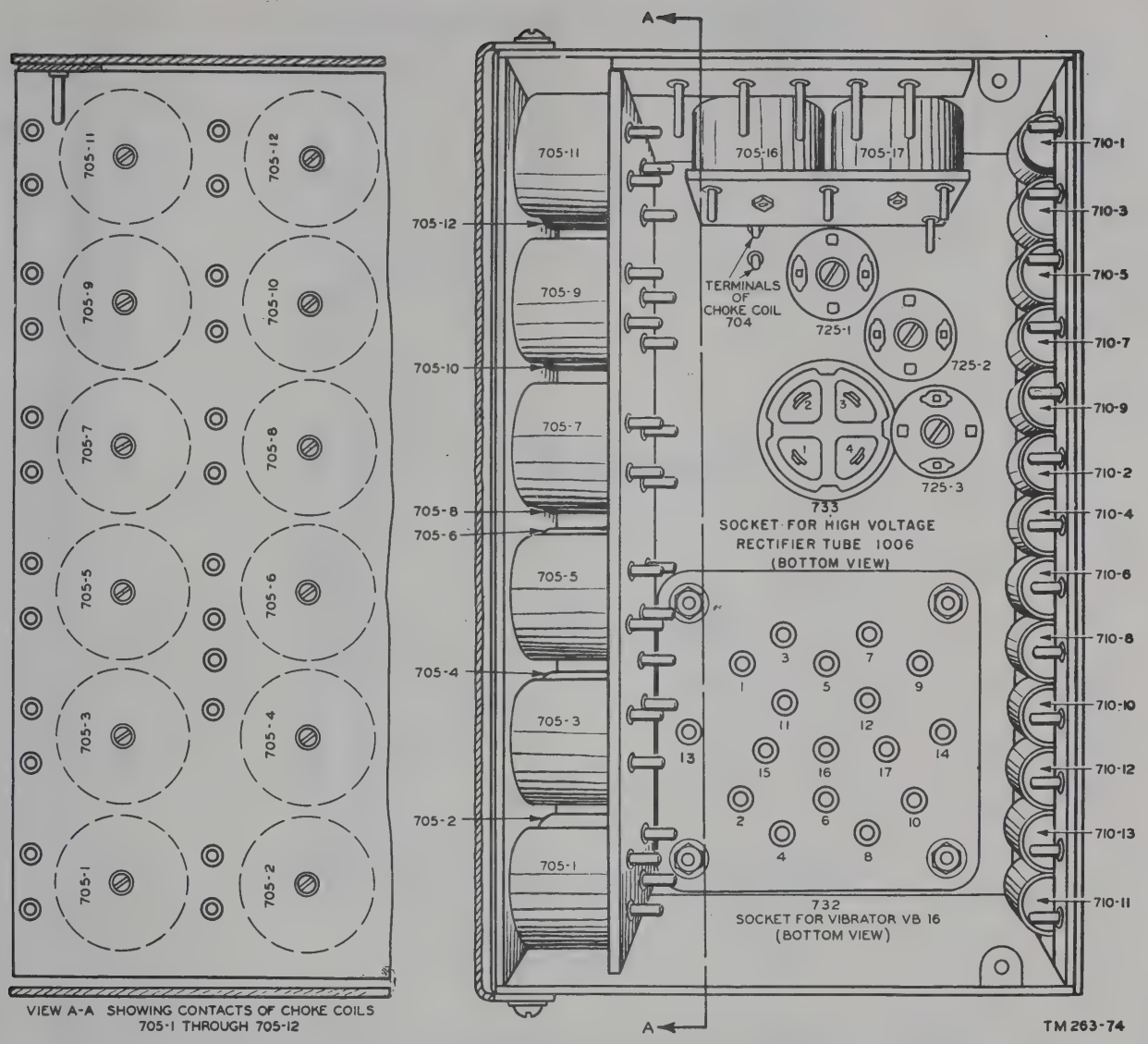

Figure 138. Shielded compartment for hv vibrator socket and filter unit, viewed from bottom of chassis.

Symptom	Probable trouble	Correction
	For shunt-drive vibrator:	
	Capacitor C225 shorted.	Replace C224 if shorted.
	Resistor R206 open (12-volt operation).	Replace R206 if open.
	Resistor R206 or R207 open (24-volt operation).	Replace R206 or R207 if open.
4. No voltage output from terminal 33 of J202. Vibrator hums. Control Ⓔ in STANDBY.	Resistor R212 or R213 open.	Replace R212 or R213 if open.
	Capacitor C226, C229A, C229B, or C230 shorted.	Replace C226, C229, C229B, or C230 if shorted.
	Open center tap to primary or secondary of T201.	Replace T201 if defective.
	S202E or S202F defective.	Repair or replace defective switch.
	Contacts 2 and 3 of K203 not closing.	Check for voltage at terminal 2 of K203. Replace K203 if defective.

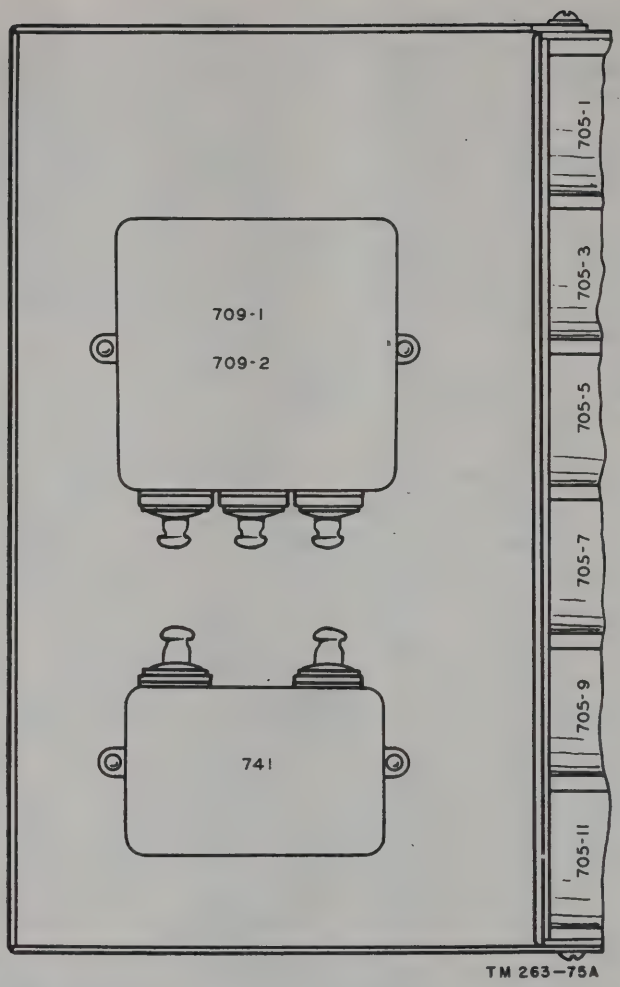

Figure 189. Inside view of door cover for hv filter compartment.

Symptom	Probable trouble	Correction
5. Low output voltage at terminal 33 of J202. Vibrator hums. Control Ⓔ in SEND.	Capacitor C227 or C228 shorted.	Replace C227 or C228 if shorted.
	Vibrator E201 defective.	Replace vibrator with spare.
	Transformer T201 partially shorted.	Replace T201 if defective.
	Resistor R212 or R113 changed value.	Check R212 and R113. Replace if defective.
	Capacitor C229A or C229B leaking.	Replace C229A and C229B if either is leaking.
6. Low voltage at terminal 33. Control Ⓔ in STAND-BY or SEND position.	Secondary of transformer T201 open between terminals 1 and 2 or between terminals 2 and 3.	Check continuity between terminals 1 and 2 and 2 and 3 of transformer T201.
	Choke L203 open.	Check continuity between terminals with vibrator removed from socket.
	Choke L206 open.	Check continuity of choke L206 with vibrator removed from socket.
	Resistor R212 increased in value.	Check R212. Replace if defective.

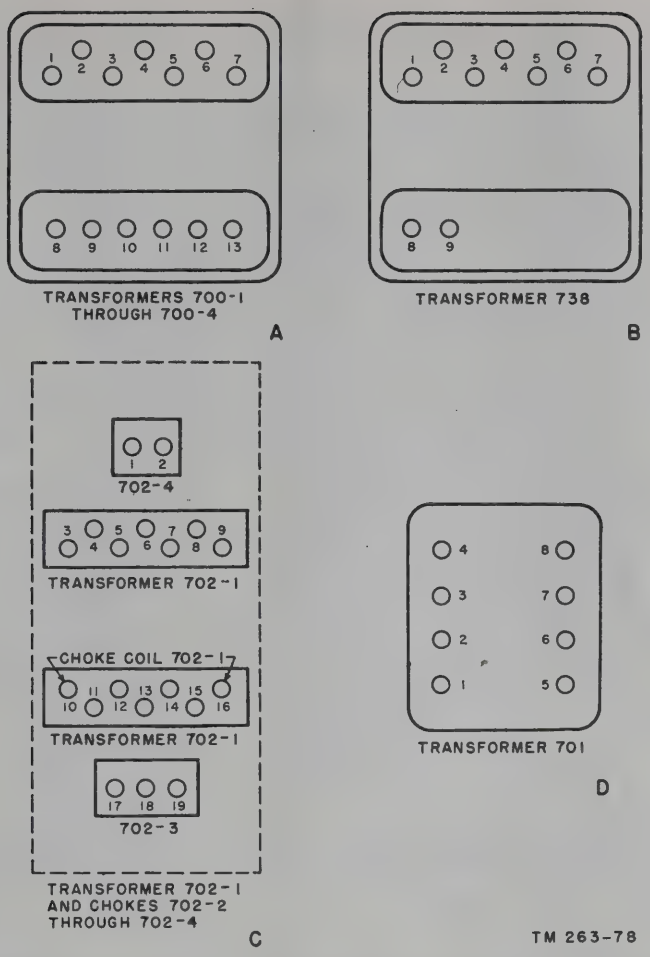

Figure 140. Vibrator Power Supply PE–237, transformer and choke coil terminal designations.

Symptom	Probable trouble	Correction
7. No voltage at terminal 21 with control Ⓔ in SEND position. No voltage at terminal 33 with control Ⓔ in STANDBY position.	Vibrator E201 defective.	Replace vibrator E201.
8. No voltage output from terminal 21 of J202. Vibrator hums. Dynamotor D201 runs. Control Ⓔ in SEND.	Capacitor C231 shorted.	Replace capacitor C231.
	Contacts 3 and 4 of relay K202 open.	Check for voltage at terminals 3 and 4 of relay K202.
	Resistor R212 open.	Check for voltage at each end of resistor R212.
	Capacitor C229A or C229B shorted.	Replace capacitor C229A and C229B.
9. No voltage output from terminal 20, 32, or 34. Dynamotor D201 does not run. Control Ⓔ in SEND.	Fuse F201 of F202 open.	Replace fuse F201 or F202 if open. If F201 continues to blow, check C201, C202, C203, C204, C205, C206, C210, C211, and C212 for short.
	Coil of K201 or K202 open, or contacts 11 and 12 of K702 not closing.	Replace K201 or K202 if defective.
	Switch S201 or S202 defective.	Repair or replace S201 or S202 if defective.

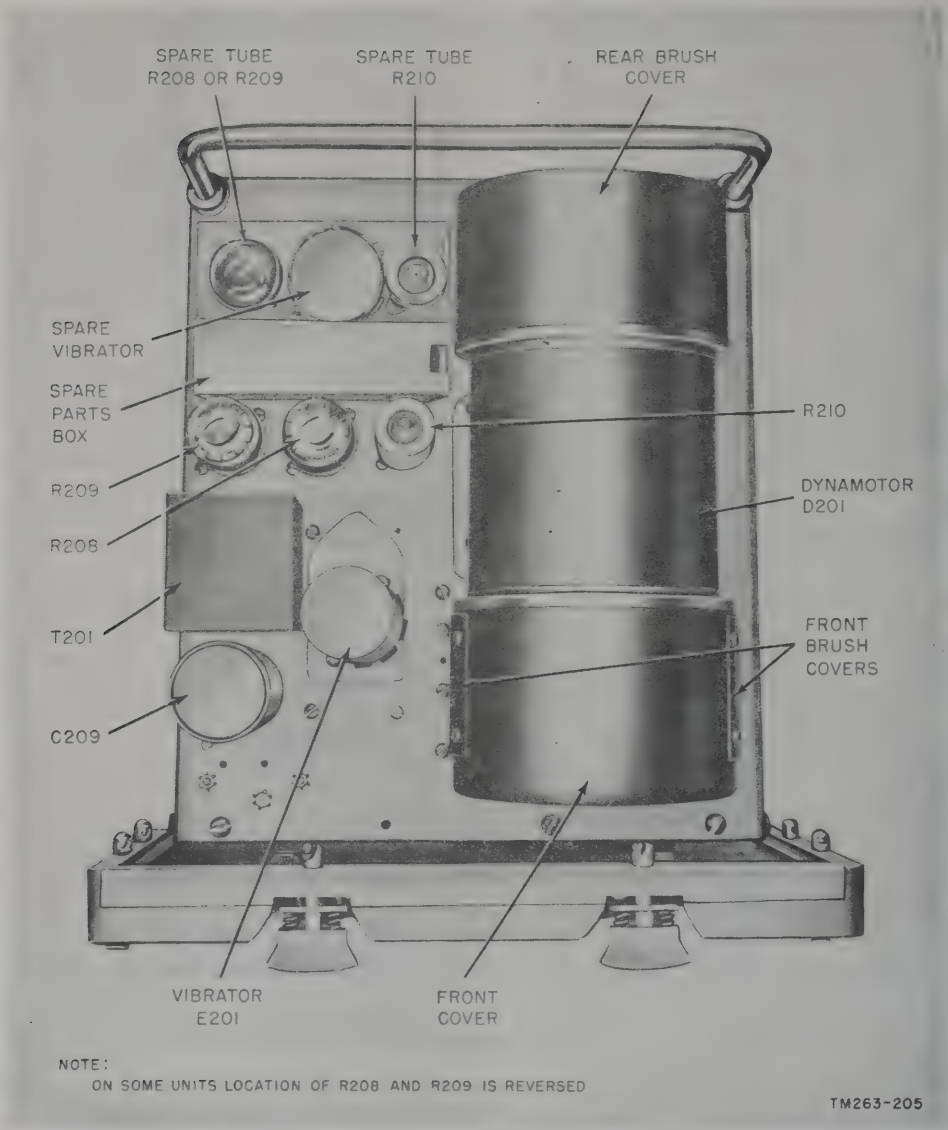

Figure 141. Dynamotor-Power Supply DY–88/GRC–9, top view of chassis.

Symptom	Probable trouble	Correction
10. High voltage at terminal 20. Receiver-transmitter in PHONE-SEND position. Microphone button released.	Resistor R211 open. Contacts 3 and 5 of relay K204 open.	Replace resistor R211. Check for voltage at terminals 3 and 5 of K204.
11. Lv output from terminal 20. Control Ⓔ in SEND.	Contacts 3 and 7 of K204 open.	Replace K204.
12. No voltage output from terminal 20 of J202. Output from terminals 32 and 34 normal. Control Ⓔ in SEND.	Capacitor C214 shorted.	Replace C214 if shorted.
	Ballast resistor R208 or R209 open.	Replace R208 or R209 if defective.

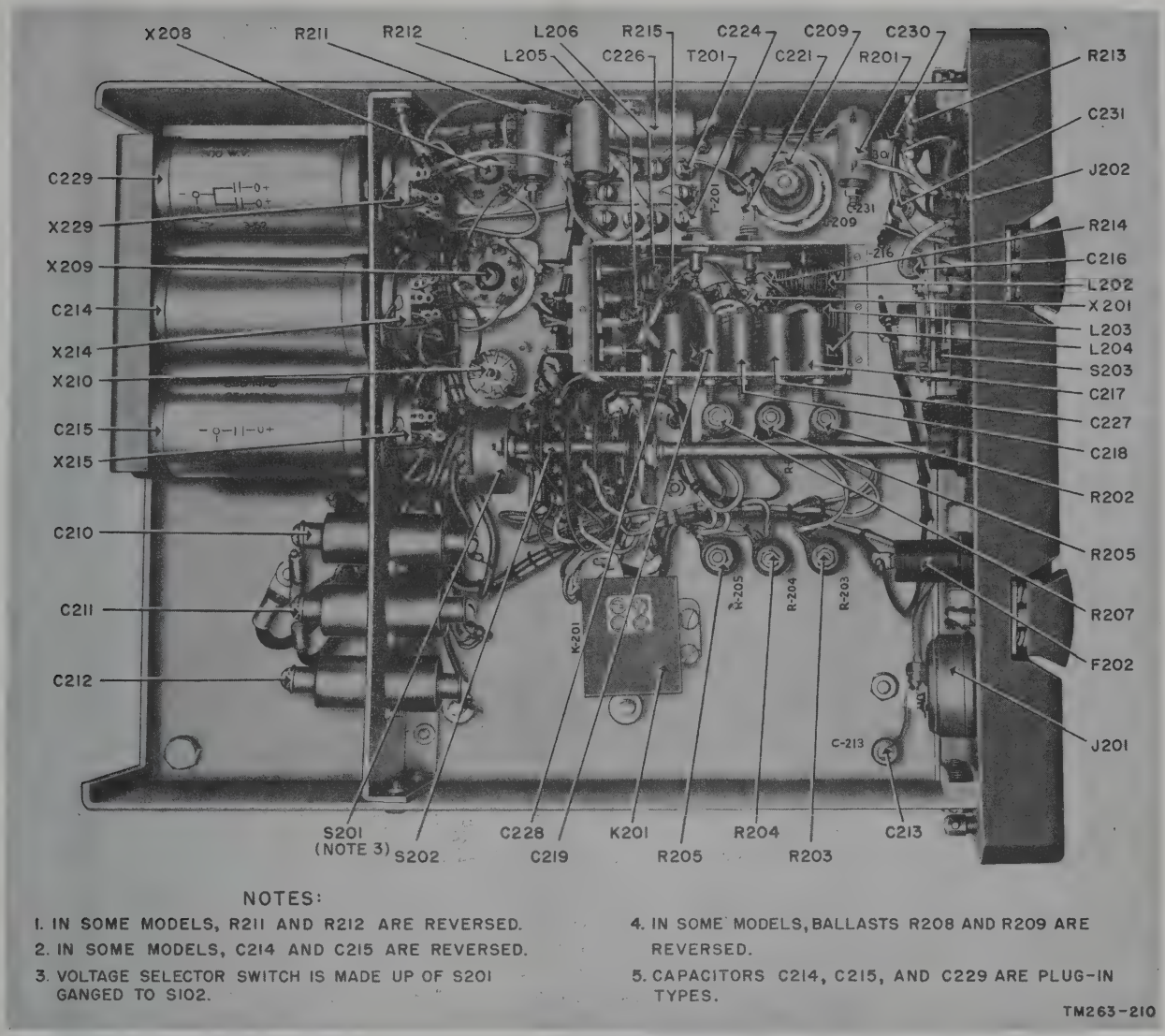

Figure 142. Dynamotor-Power Supply DY–88/GRC–9, bottom view of chassis with filter box cover removed.

Symptom	Probable trouble	Correction
13. No voltage output from terminal 34 of J202. Output from terminals 20 and 32 normal. Control Ⓔ in SEND.	Resistor R201 open.	Replace R201 if open.
14. No voltage at terminals 22 and 23. Control Ⓔ in STANDBY position.	Ballast resistor R210 open.	Check ballast resistor R210 for continuity.
	Capacitor C216 shorted.	Replace capacitor C216.
	Capacitor C215 shorted.	Replace capacitor C215.
	Relay K203 open.	Replace relay K203 if open.
15. No hv output from terminal 32 of J202. Dynamotor E201 runs.	Coil L201 open.	Replace L201 if open.
	Capacitor C201, C208, or C209.	Replace C207, C208, or C209 if shorted.
	Hv brushes defective.	Replace brushes.

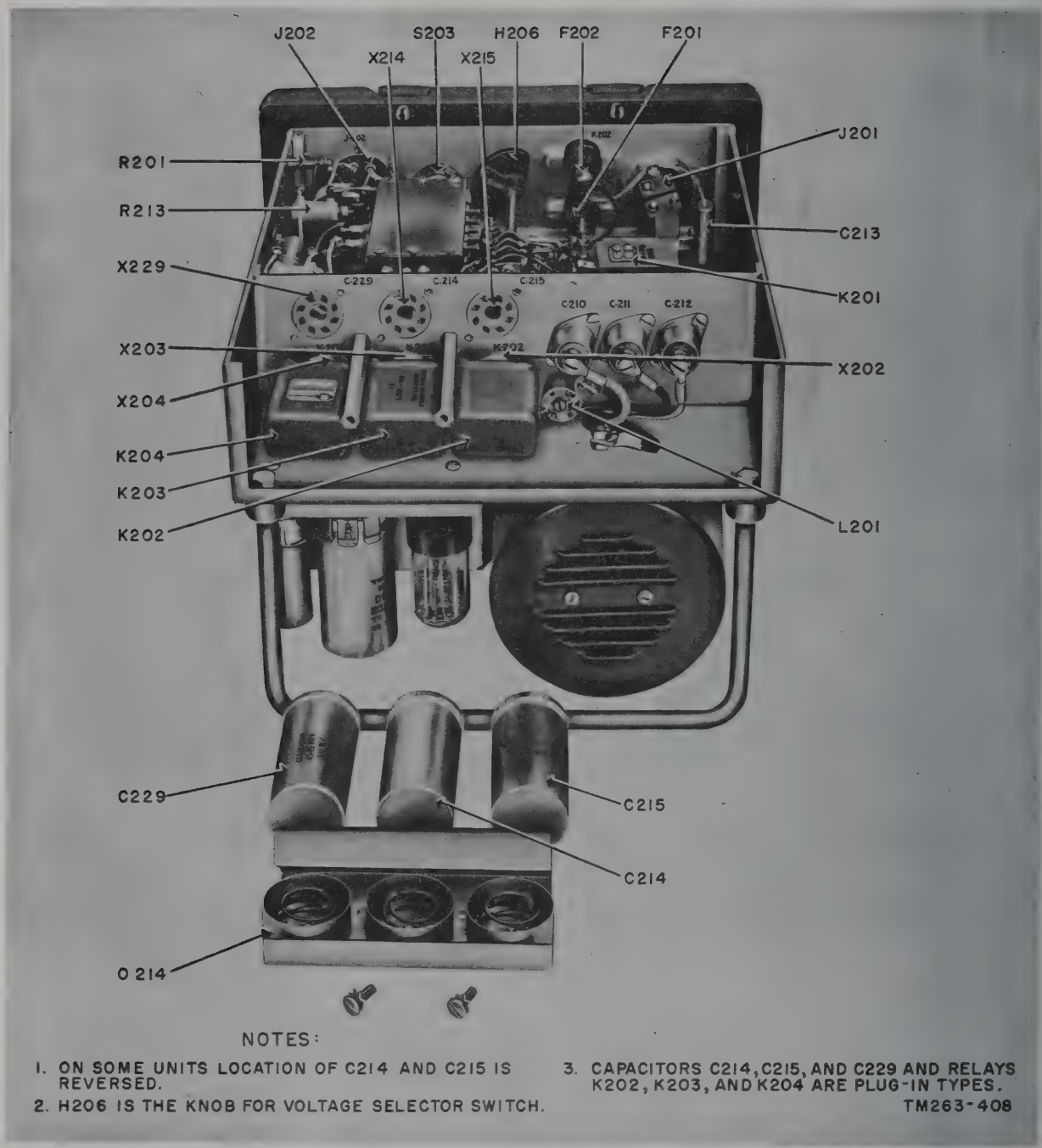

Figure 143. Dynamotor-Power Supply DY–88/GRC–9, rear view of chassis showing location of relays.

Symptom	Probable trouble	Correction
16. Excessive hash in receiver output. Control Ⓔ in SEND.	Relay K204 chatters.	Replace relay K204.

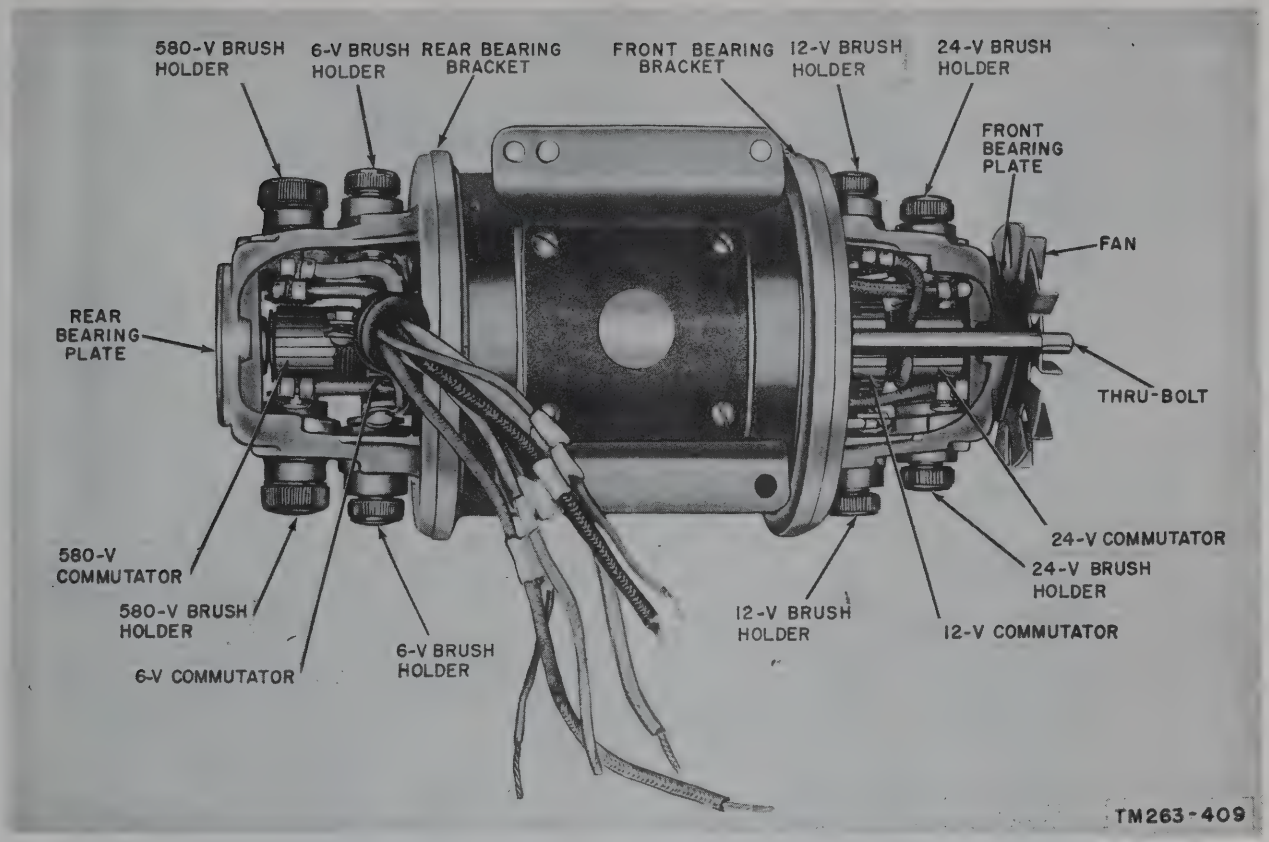

Figure 144. Dynamotor D201, covers removed, bottom view.

192. Resistance of Power Transformer and Relay Coils of Dynamotor-Power Supply DY–88/GRC–9

The resistances of the transformer windings and the relay coils in the dynamotor power supply are listed below.

Transformer or coil	Terminals	Ohms
T201	1 to 3	393
	4 to 5	11.6
	6 to 7	2.8
	8 to 10	.53
K201	COM. to 6	20.5
	COM. to 12	72.5
	COM. to 24	235
K202	1 to 9	407
	1 to 8	10.1
	1 to 7	2.0
K203	1 to 9	3.6
K204	1 to 9	118

Note. The resistances listed above (except the resistance for the coil of K203) are approximate and may vary slightly, depending on the individual supplier. The resistance for the coil of K203 must be exact because the current through this coil also flows through the filaments in the receiver.

193. Disassembly of Dynamotor-Power Supply DY–105/GRC–9X

a. Loosen the eight Dzus fasteners located on the front panel, and remove the chassis from the case.

b. Remove the screw that fastens each end cover (fig. 145) of the dynamotor D1.

c. Rotate the right end cover toward the chassis front panel and pull it off the dynamotor frame. The 580-volt brushes can now be reached (fig. 147).

d. Rotate the left end cover away from the chassis front panel and pull it off the dynamotor frame. The 24-volt brushes can now be reached (fig. 147).

Note. See that caution notice given in paragraph 190.

194. Troubleshooting Chart for Dynamotor-Power Supply DY–105/GRC–9X

To troubleshoot the dynamotor power supply, first remove the chassis from its case. Connect the power supply to a radio set known to be

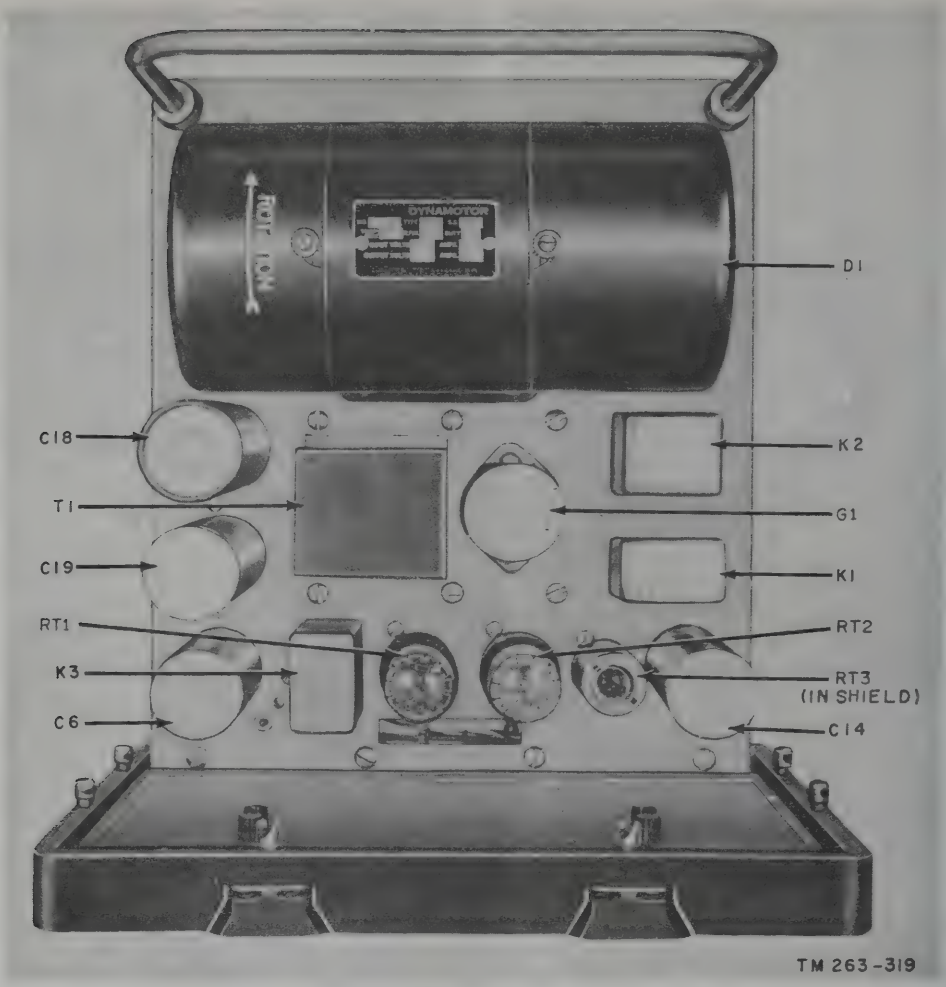

Figure 145. Dynamotor-Power Supply DY–105/GRC–9X, top view of chassis.

good. Note that the terminals on POWER OUT receptacle J2 are numbered. These terminals are to be used to check the output of the dynamotor power supply. Refer to figures 145 through 147 for component locations and to figure 174 for the schematic diagram.

Symptom	Probable trouble	Correction
1. No voltage output from any terminal of J2.	Fuse F1 or F2 open.	Replace fuses. If F2 continues to blow, check C1, C7, C9, and C10 for short.
No vibrator hum is heard. Dynamotor Ⓓ1 does not turn. Control Ⓔ in SEND or STANDBY.	Switch S1 defective.	Replace S1.
2. No voltage output at terminals 22 and 23 of J2. Control Ⓔ in SEND or STANDBY.	Fuse F2 open.	Replace F2.
	RT3 open.	Replace RT3 with spare.
	Relay K1 coil open.	Replace K1.
	Capacitor C14 or C17 shorted.	Replace C14 or C17.
	Resistor R1 or R2 open.	Replace R1 or R2.
3. No voltage output from terminal 33 of J2. Vibrator does not hum. Control Ⓔ in STANDBY.	Fuse F2 open.	Replace F2.
	Vibrator defective.	Replace vibrator with spare.
	Contacts 2 and 3 of K1 not closing.	Check for battery voltage at terminal 2 of K1. Replace relay.

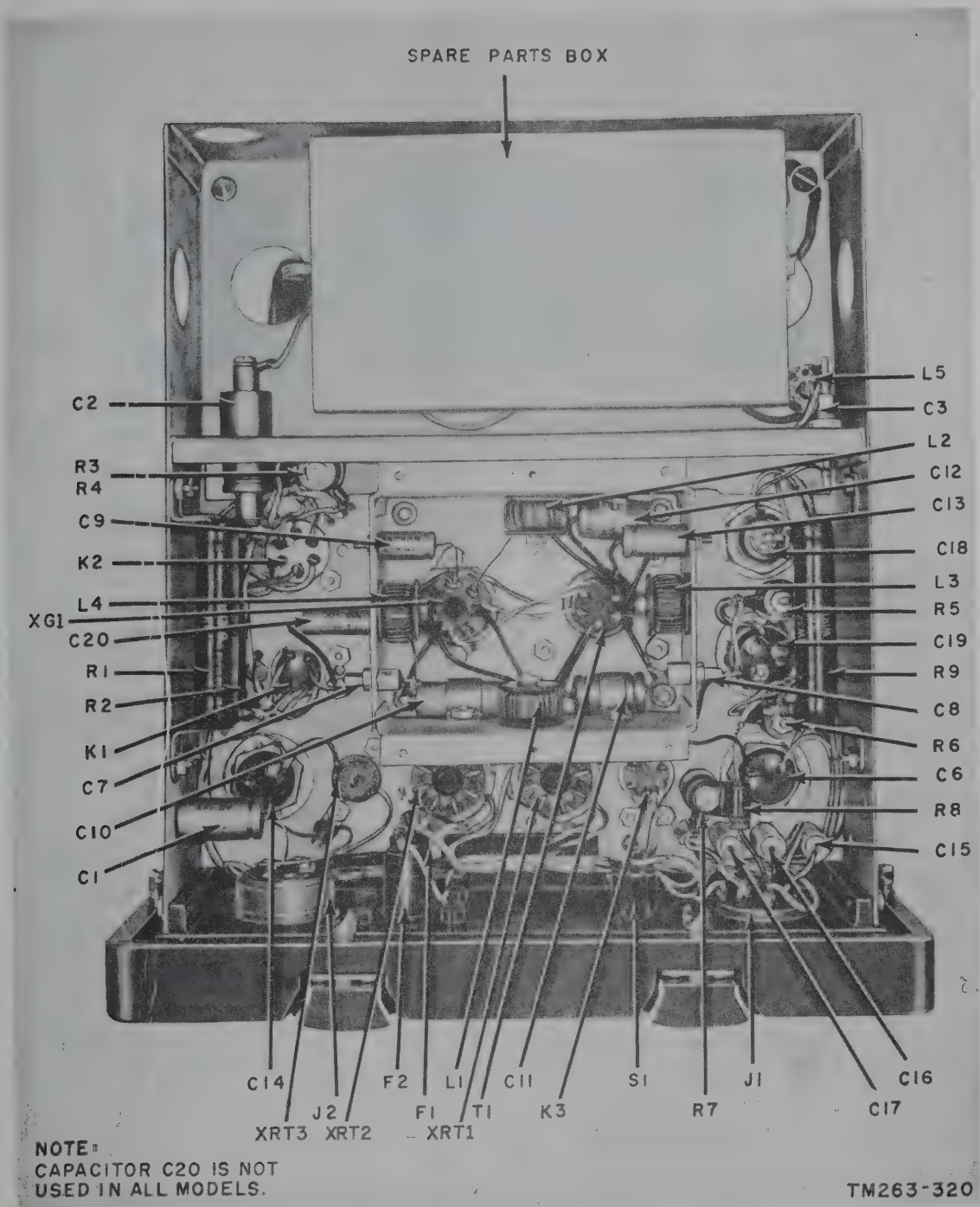

Figure 146. Dynamotor-Power Supply DY–105/GRC–9X, bottom view of chassis with filter box cover removed.

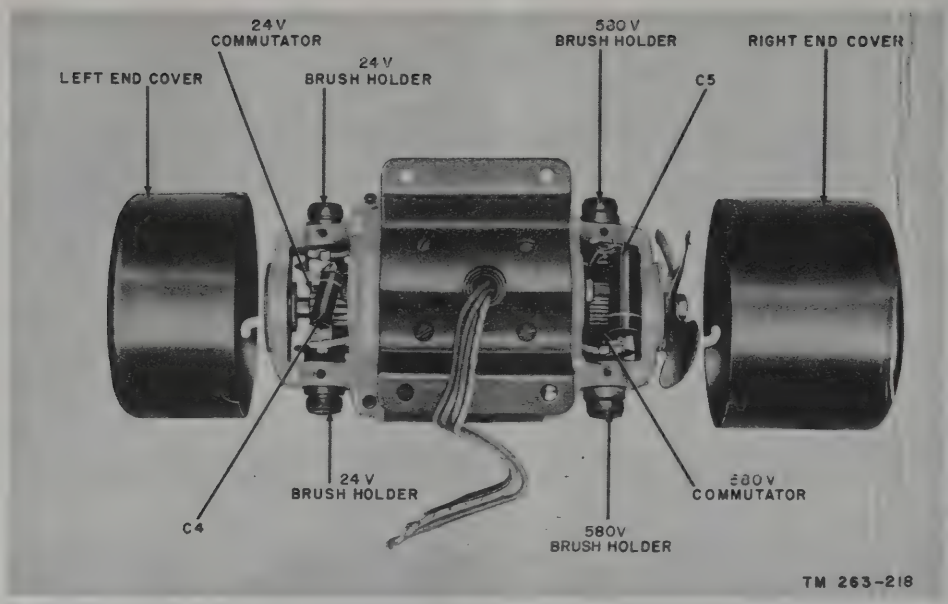

Figure 147. Dynamotor D1, with end covers removed.

Symptom	Probable trouble	Correction
	Coil L4 open.	Replace L4.
4. No voltage output from terminal 33 of J2. Vibrator ⓖ1 hums. Control Ⓔ in SEND or STANDBY.	Resistor R5, R6, or R8 open.	Replace R5, R6, or R8.
	Capacitor C10, C13, C15, C16, C19A, or C19B shorted.	Replace C10, C13, C15, C16, C19A, or C19B.
	Open center top to primary or secondary of T1.	Replace T1.
5. Lv output at terminals 21 and 33 of J2. Vibrator G1 hums. Control Ⓔ in SEND or STANDBY.	Capacitor C11 or C12 shorted.	Replace C11 or C12.
	Vibrator G1 defective.	Replace vibrator with spare.
	T1 partially shorted.	Replace T1.
	Resistor R5 or R6 changed value.	Check and replace R5 or R6.
6. No voltage output from terminals 20, 32, and 34. Dynamotor D1 does not turn.	Fuse F1 or F2 open.	Replace fuse F1 or F2. If F1 continues to blow, check C2 and C4 for short.
	Coil of K2 open or its contacts not closing.	Replace K2.
	Switch S1 defective.	Repair or replace S1.
7. No voltage output from terminal 20 of J2. Output from terminals 32 and 34 normal. Control Ⓔ in SEND.	Capacitor C6 shorted.	Replace C6.
	Resistor R3 or R4 open.	Replace R3 or R4.
8. No voltage output from terminal 34 of J2. Dynamotor D1 runs. Control Ⓔ in SEND.	Resistor R9 open.	Replace R9.
9. No hv voltage output from terminal 32 of J2. Dynamotor D1 runs. Control Ⓔ in SEND.	Coil L5 open.	Replace L5.
	Capacitor C18, C3, or C5 shorted.	Replace C18, C3, or C5.
	Brushes defective.	Replace brushes.
10. Lv output from terminal 20. Control Ⓔ in SEND.	Contacts 2 and 3 of K3 open.	Replace K3.
11. Excessive hash in receiver output. Control Ⓔ in SEND.	Relay K3 chatters.	Replace K3.

195. Resistances of Power Transformer and Relay Coils of Dynamotor-Power Supply DY–105/GRC–9X

The resistances of the transformer windings and the relay coils in the dynamotor power supply are listed below.

Transformer or coil	Terminals	Ohms
T1	1 to 2	2.5 to 3
	2 to 3	2.5 to 3
	4 to 5	145 to 325
	5 to 6	145 to 325
K1	1 to 4	3.6
K2	1 to 6	209
K3	1 to 5	120

* Resistance depends on manufacturer of transformer.

Section II. REPAIRS

196. Replacement of Parts

a. Most of the parts in Radio Set AN/GRC–9(*) are easily reached and replaced if found defective. If the band change switches need replacement, mark the wires connected to the switch with tags or other devices to avoid misconnection when the new switch is installed. Do this whenever replacement requires the disconnection of numerous wires.

b. When removing screws from the units, keep the screws in individual groups corresponding to the components which they fasten to the chassis. This will speed up the reassembly process.

197. Replacing Oscillator-Coil Assemblies T101, T102, and T103

a. Receiver-Transmitter RT–77(*)/GRC–9, bearing serial number 12100 and higher, contains new temperature-compensated oscillator-coil assemblies T101, T102, and T103 which are identified by a painted dot that follows the band designation on top of the can. Coils for bands 1 and 2 have a red dot; the coil for band 3 has a green dot.

b. When the new oscillator-coil assemblies are used to replace the oscillator-coil assemblies in units having serial numbers lower than 12100, temperature-compensating capacitors C149, C150, and C151 must be clipped off. If all three oscillator-coil assemblies are to be replaced simultaneously, the temperature-compensating characteristics can be improved by leaving capacitors C149, C150, and C151 in the assembly and clipping the leads to capacitor C146.

198. Removing and Replacing Filter Box in Dynamotor-Power Supply DY–88/GRC–9

a. General. The filter (fig. 142) located beneath the chassis, houses all the components necessary for rf filtering of the vibrator input and output voltages. The filter box also mounts the vibrator socket which protrudes through the power supply chassis to make the vibrator accessible from above. The filter box is a very compact unit, and it will frequently be more advantageous to replace the filter box in its entirety than to attempt repairs.

b. Removal Procedure. Remove the vibrator six leads, and four screws and their associated lockwashers. In removing the six leads, be sure that only sufficient heat to melt the solder is applied to the leads of capacitors C220, C221, C222, C223, C224, and C225, and that no pressure is applied to the leads which might break the ceramic bodies. Capacitors C227 and C228, resistors R214 and R215, and capacitors C217, C218, and C219 may be replaced by removing the screws which hold the cover plate on the box. The capacitors may be changed by removing the nuts and lockwashers which mount the ground end, and carefully unsoldering the other end; be careful to avoid damaging other parts. It is possible to replace any component in the filter box, but it must be done carefully and only by experienced repairmen.

c. Replacement Procedure. Installing a new filter box should be done in the reverse sequence of that given for removing the old box. The same caution should be applied to soldering leads to capacitors C220 through C225.

199. Replacing Voltage Regulator Unit in Generator GN–58(*)

a. The only pluck-out part in the hand generator is the voltage regulator unit. The top half of the generator housing is fastened to the bottom by clamps. On some models, the clamps are fastened to the bottom half of the housing by screws. These screws must be completely removed before the clamps can be released. Once the top half is lifted off the bottom half of the housing, the voltage regulator unit is clearly seen. Figure 148 shows an old model of Generator GN–58–A. This type of regulator has an octal socket and has been superseded with a new type of regulator. The new regulator is used on the latest models of Generator GN–58–A and, by means of an adapter plug, may be inserted into the old models. Within the adapter are resistance units to accommodate the new regulator to the old model generator. The bottom of the adapter has an octal base; the top has 14 holes into which the prongs of the new type regulator are inserted. If the old regulator is known to be defective, remove it and plug the adapter into the octal socket in the generator chassis. Place the new type voltage regulator in the adapter. Readjustment of resistor 245 (*b* below) may then be necessary.

b. If the regulator itself becomes defective, do not attempt to adjust it. Remove it and plug in a new regulator unit. Some slight voltage adjustment can be made by varying the slider position on resistor 245. If the tap is moved to increase the resistance of resistor 245, there will be less current in the regulator coil and it will not have a strong enough field to keep as many contacts open, as were open before resistor 245 was manipulated. Some of the contacts will then close to allow more current to flow in the generator field circuit. This action causes a higher output voltage from the generator.

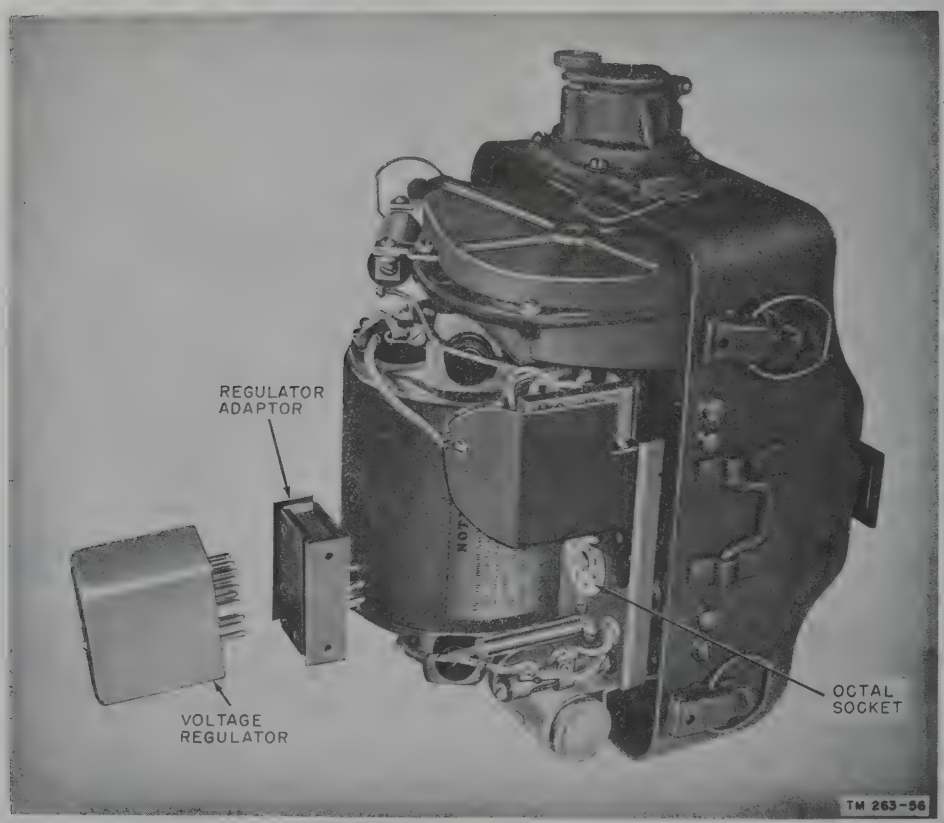

Figure 148. Replacement of early model voltage regulator with later model, in Generator GN–58–A (early models), by means of adapter.

200. Replacing Brushes in Generator GN–58–(*)

a. The standard replacement brushes for Generator GN–58–(*), shaped to fit the contour of the armature and have polarity markings on them. Replace the brushes so that the polarity markings face upward, in the normal operating position of the generator. If this is not observed, damage to the commutator may result.

b. Some brush replacements will need a *sand-in* operation to allow the brush to make full contact with the armature. If the operation is not performed, excessive heating of the brush and commutator will occur and ruin the commutator.

c. Use two strips of No. 00 sandpaper about 5 inches long and almost as wide as the hv and lv armatures. Wrap the strip of sandpaper around the commutator *with the sand surface out.* Insert the brushes in the brush holders, and replace the brush caps over the brush spring so that the brushes are pressed tightly against the sandpaper. Hold the ends of the sandpaper so as to stretch it tightly against the commutator (fig. 149). Rotate the armature back and forth until the full width of the brush face is making contact against the sandpaper, as indicated by the sanding marks or scratches on the contact surface of the brush when the brush is removed for inspection.

d. If no voltages or intermittant voltages appear in the output, then the brushes have been turned down too far.

e. When checking the old brushes, compare them with the new ones. If the old brushes compare in length and contour with the new ones, and if the output voltages are normal, replacement of new brushes is not necessary.

f. Never apply oil, grease, or any other lubricant to the brush, commutator, or brush holder.

201. Replacing Brushes in Dynamotor-Power Supply DY–88/GRC–9

The brushes used in dynamotor D201 are shaped to fit the contour of the armature and are generally replaced after 1,000 hours of operation. To replace the brushes, proceed as follows:

a. Refer to the disassembly instructions in paragraph 190*a* through *d.*

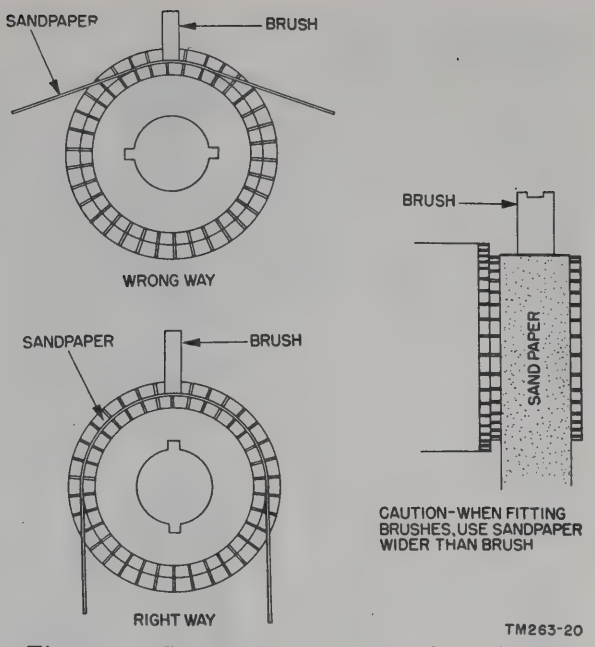

Figure 149. Correct and incorrect methods of fitting brush to commutator.

b. Unscrew the brush caps (fig. 156) and remove the brushes.

Note. The commutator arrangement will vary according to the type of dynamotor used (figs. 150 and 151).

c. When replacing the brushes, be sure that the polarity markings on the brushes face upward, in the normal operating position of the dynamotor. If this is not observed, the commutator may be damaged.

d. If the brushes have to be shaped to fit the contour of the commutator, follow the procedure given in paragraph 200*b* through *e.*

e. Replace the brush caps and end covers and tighten the end cover fastening screws.

202. Replacing Brushes in Dynamotor-Power Supply DY–105/GRC–9X

To replace the brushes, proceed as follows:

a. Refer to the disassembly instructions in paragraph 193*a* through *d.*

b. Unscrew the brush caps (fig. 147) and remove the brushes.

c. For brush polarity markings and shaping see paragraphs 201*c, d,* and *e.*

203. Removal of Armature of Generator GN–58–(*)

The armature is not to be repaired, except in a depot maintenance unit. The information be-

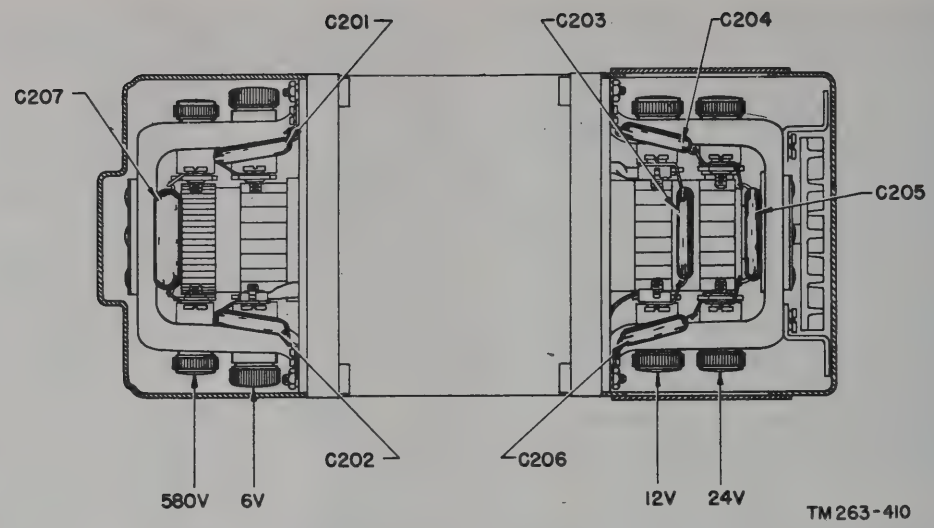

Figure 150. Dynamotor D201, parts location in some models.

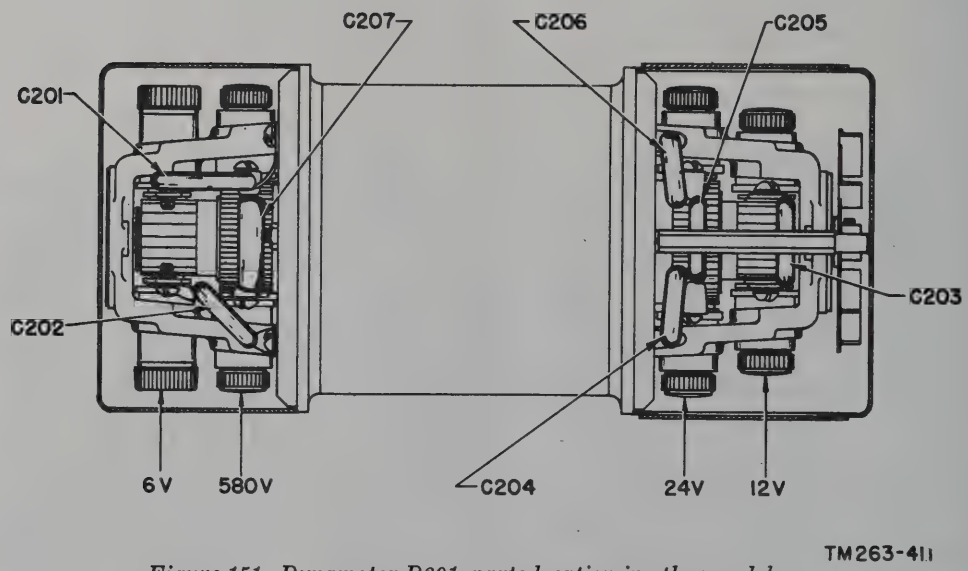

Figure 151. Dynamotor D201, parts location in other models.

low is for those units where the armature is to be replaced. Proceed as follows:

a. Remove all brushes.

b. Take off the speed change housing cover by removing the six screws around the edge of the cover (figs. 127 and 152).

Caution: Do not damage the gasket.

c. Remove the screw that secures the sprocket gear to the armature shaft (fig. 127).

d. The sprocket gear is press-fitted to the shaft. Pry it off gently (fig. 153).

e. Remove the two through-bolts from the left generating unit endpiece (fig. 154).

f. Pry the left *generating unit endpiece* away from the generating unit, and slip it off the armature shaft bearing. Be careful not to damage any of the wiring. If necessary, remove the left bearing plate so that the endpiece can be forced off and away from the bearing which is pressed-fitted to the armature shaft.

g. Now pull the armature gently through the generating unit (fig. 155).

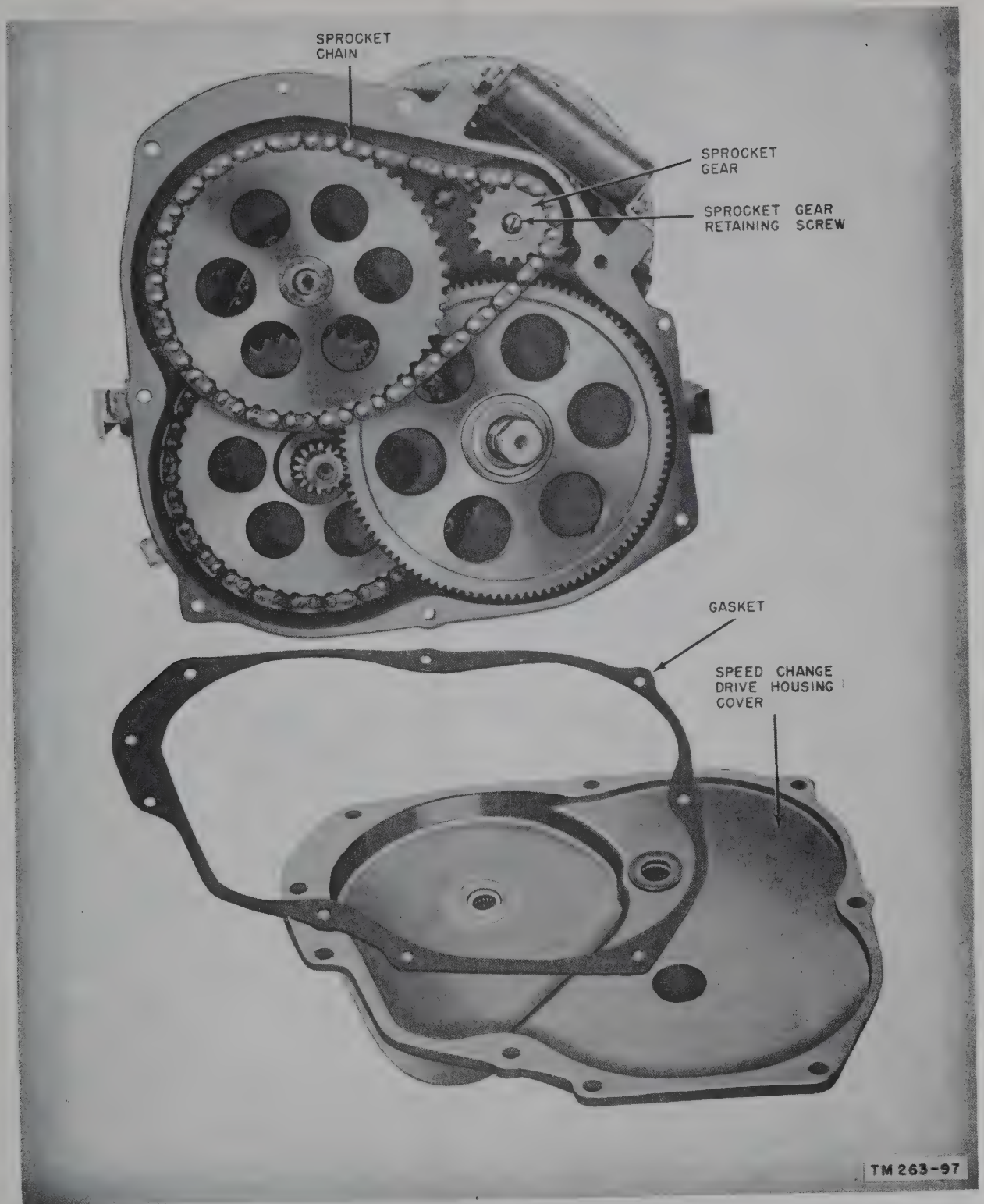

Figure 152. Speed change drive housing, gasket, and cover removed from Generator GN–58–(*).

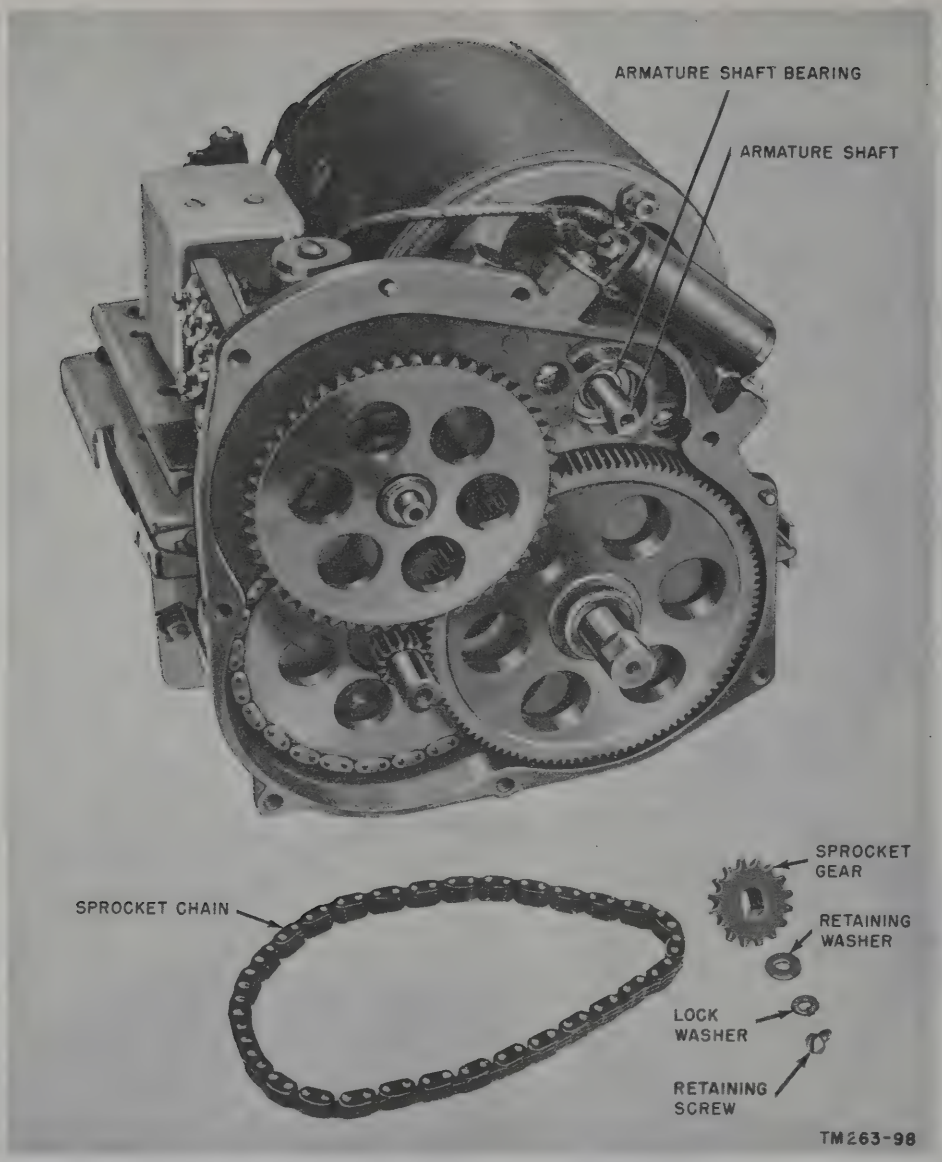

Figure 153. Sprocket gear and chain removed from Generator GN–58–(*).

204. Cleaning Commutator

a. The commutators must be clean and smooth. Press a piece of canvas folded to the exact width of the commutators against the commutators and turn the armature by hand.

b. If the commutators have been burned or pitted, hold a piece of No. 000 sandpaper against the commutators and turn the armature by hand.

c. If necessary, a cloth moistened in Cleaning Compound may be used to remove the dirt and grease.

d. Polish the commutators with a piece of canvas (*a* above), and wipe with a clean, dry cloth.

205. Generator GN–58–(*) Lubrication at Third or Higher Echelons

When Generator GN–58–(*) is disassembled for general overhaul or repairs, lubricate as follows:

a. Clean old grease from the bearings with Cleaning Compound. Invert the generator when cleaning, so that the Cleaning Compound does

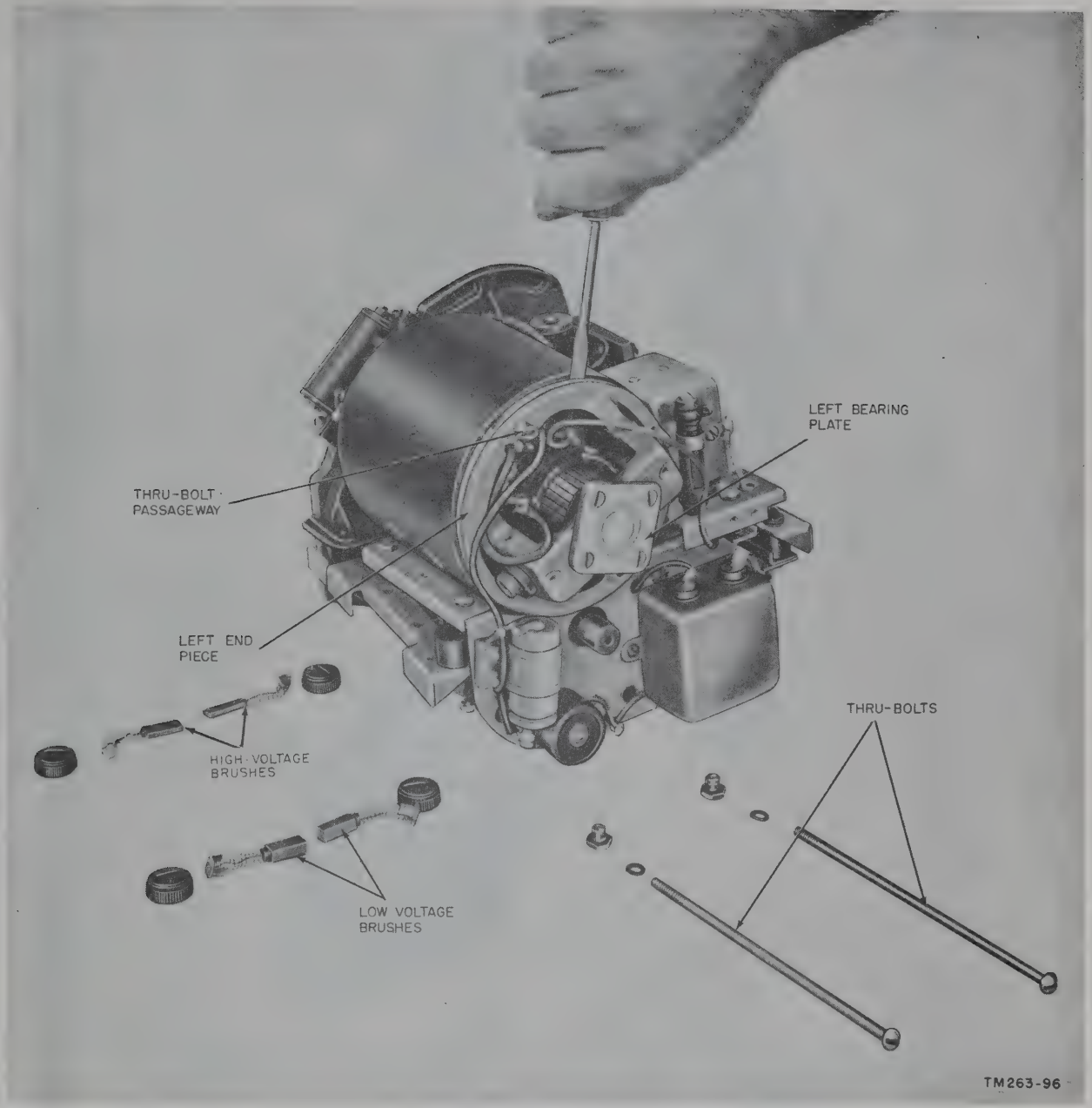

Figure 154. Prying off generating unit left endpice of Generator GN–58–(*).

not flow into the commutator or armature windings.

b. Relubricate with Grease, Aircraft and Instruments (GL) during reassembly, or after the unit is assembled. Spread the grease evenly and avoid an excess of grease.

Caution: Never apply grease (GL) to the brush, commutator, or brush holder.

206. Replacement of Armature of Generator GN–58–(*)

Reverse the disassembly procedure given in paragraph 203; be careful of the following:

a. The bottom through-bolt passes through a connecting lug before it emerges from the generating unit. Before screwing the nut on to the bolt, be sure that the lug is around the bolt inside the generating unit.

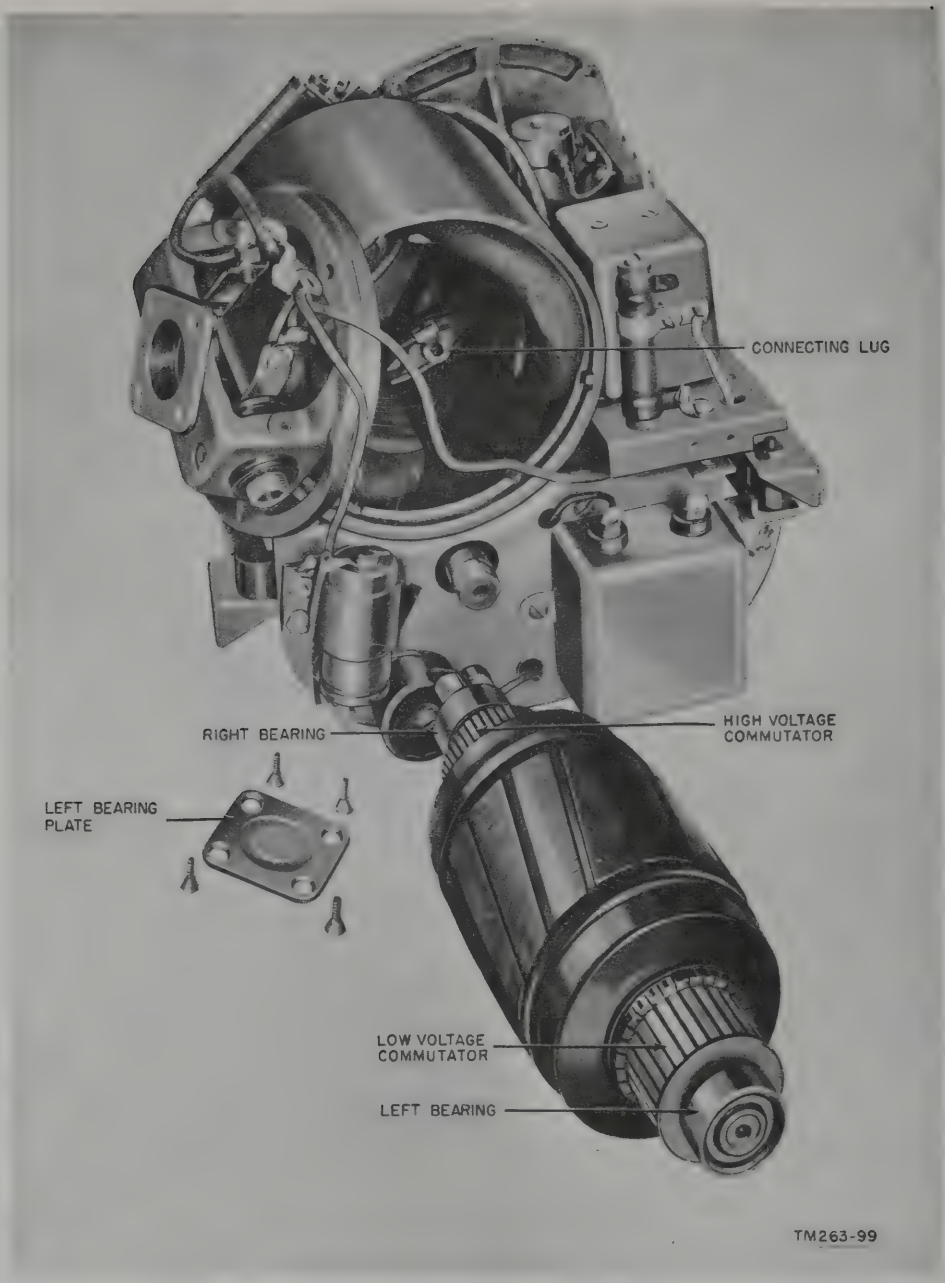

Figure 155. Armature removed from generating unit of Generator GN–58–(*).

b. Be sure that the sprocket chain is fitted completely about the sprocket gear and is sufficiently lubricated.

c. Do not forget to replace the gasket before screwing on the speed change housing cover.

207. Removal of Armature of Dynamotor-Power Supply DY–88/GRC–9

In general, repair of replacement of the armature is not recommended. If possible, replace the entire dynamotor. The armature is not to be repaired, except in a depot maintenance unit. The following information is given for those units where the armature is to be replaced. Proceed as follows:

a. Remove the power supply from its case.

b. Disconnect the dynamotor wires under the chassis by loosening the screws that hold the dynamotor wire spade lugs. *Tag all wires before removal.*

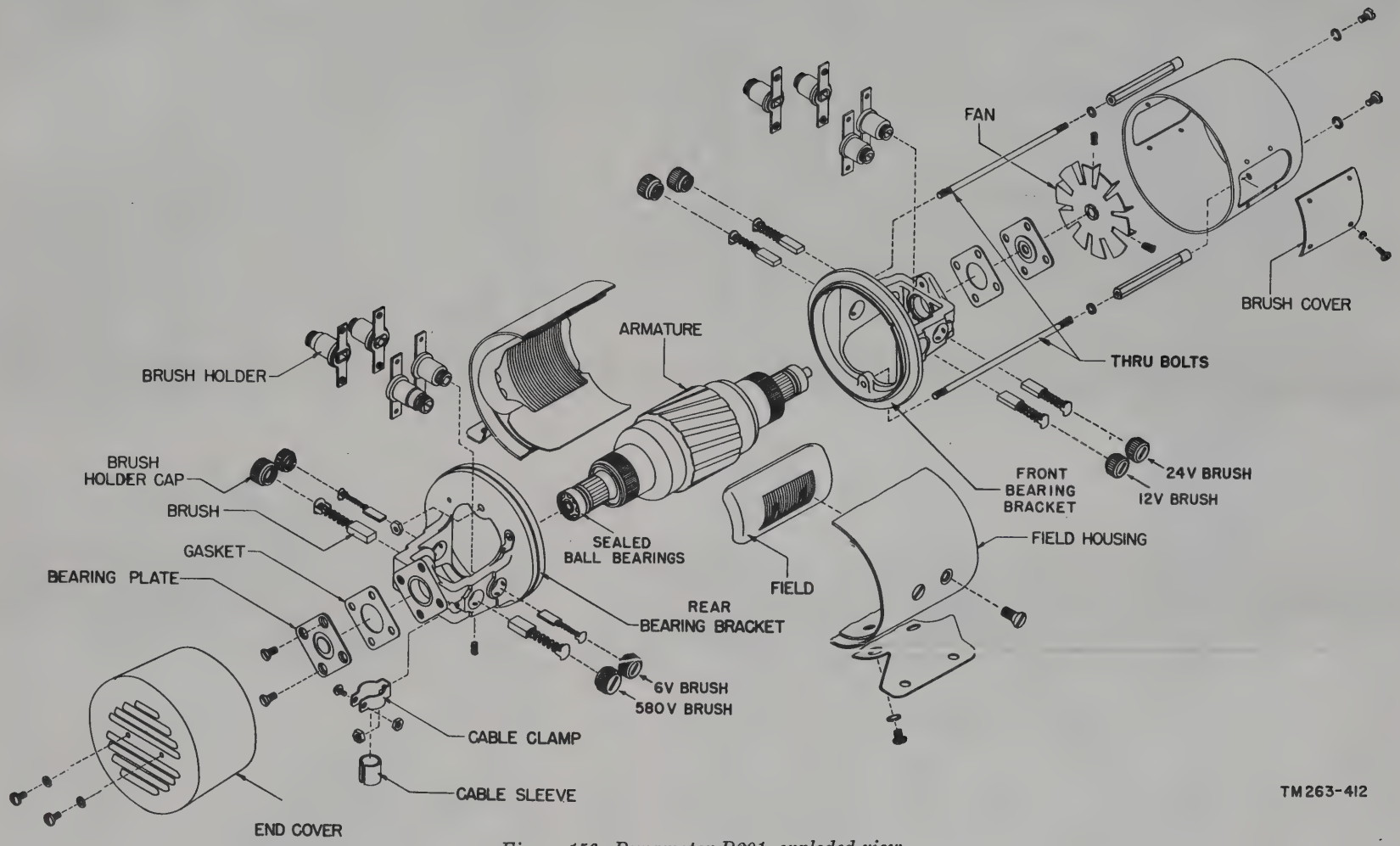

Figure 156. Dynamotor D201, exploded view.

c. Remove the four bolts that hold the dynamotor to the chassis.

d. Gently pull the dynamotor up off the chassis.

e. Refer to figure 156 for the remainder of the dynamotor disassembly procedure.

(1) Loosen the four screws and remove the dynamotor front and rear end covers.

(2) Remove all brushes.

(3) Remove the top through-bolt.

(4) Before removing the bottom through-bolt, loosen the cable clamp. Then remove the bottom through-bolt.

(5) Loosen and remove all field wires from the terminals at the front (fan) end of the dynamotor. *Be sure to tag all wires.*

(6) Use an Allen wrench to remove the two screws that hold the fan to the dynamotor. Remove the fan.

(7) Pry the front bearing bracket away from the dynamotor unit. Remove the front bearing bracket by pulling it off the dynamotor unit. Be careful not to damage any of the wiring.

(8) Now pull the armature out gently through the dynamotor unit.

208. Cleaning Commutator of Dynamotor-Power Supply DY–88/GRC–9

Refer to paragraph 204 for the cleaning procedure.

209. Lubricating Instructions for Dynamotor-Power Supply DY–88/GRC–9

When the dynamotor is disassembled for general overhaul or repairs, lubricate as follows:

a. Clean old grease from the bearings with Cleaning Compound. Do not let the Cleaning Compound flow into the commutator or armature windings.

b. Relubricate with grease (GL) during reassembly. Spread the grease evenly and avoid an excess of grease.

Caution: Never apply grease to the brushes, commutator, or brush holders.

210. Replacement of Armature of Dynamotor-Power Supply DY–88/GRC–9

To replace the dynamotor armature, reverse the disassembly procedure given in paragraph 207. Be sure to connect all wires properly.

211. Removal of Dynamotor-Power Supply DY–105/GRC–9X Dynamotor Armature

In general, repair or replacement of the armature is not recommended. If possible, replace the entire dynamotor. The armature is not to be repaired, except in a depot maintenance unit. The following information is given for those units where the armature is to be replaced. Proceed as follows:

a. Remove the chassis from its case.

b. Disconnect the dynamotor wires under the chassis and tag them.

c. Remove the four bolts that hold the dynamotor to the chassis and remove the dynamotor.

d. Refer to figure 157 for the remainder of the dynamotor disassembly procedure.

(1) Remove the dynamotor and covers by loosening the screw at the top of each cover and rotating and pulling the cover off.

(2) Unscrew the brush caps and remove the brushes.

(3) Disconnect the two field terminals connected to the 580-volt brush holders.

(4) Remove the nut and lock washer that holds the fan to the shaft and remove the fan.

(5) Remove the top and bottom through-bolts.

(6) Remove the right endpiece.

(7) The armature may now be pulled out gently through the dynamotor unit.

212. Cleaning Commutator of Dynamotor-Power Supply DY–105/GRC–9X

Refer to paragraph 204 for the cleaning procedure.

213. Lubrication Instruction for Dynamotor-Power Supply DY–105/GRC–9X

Refer to paragraph 209 for the lubrication instructions.

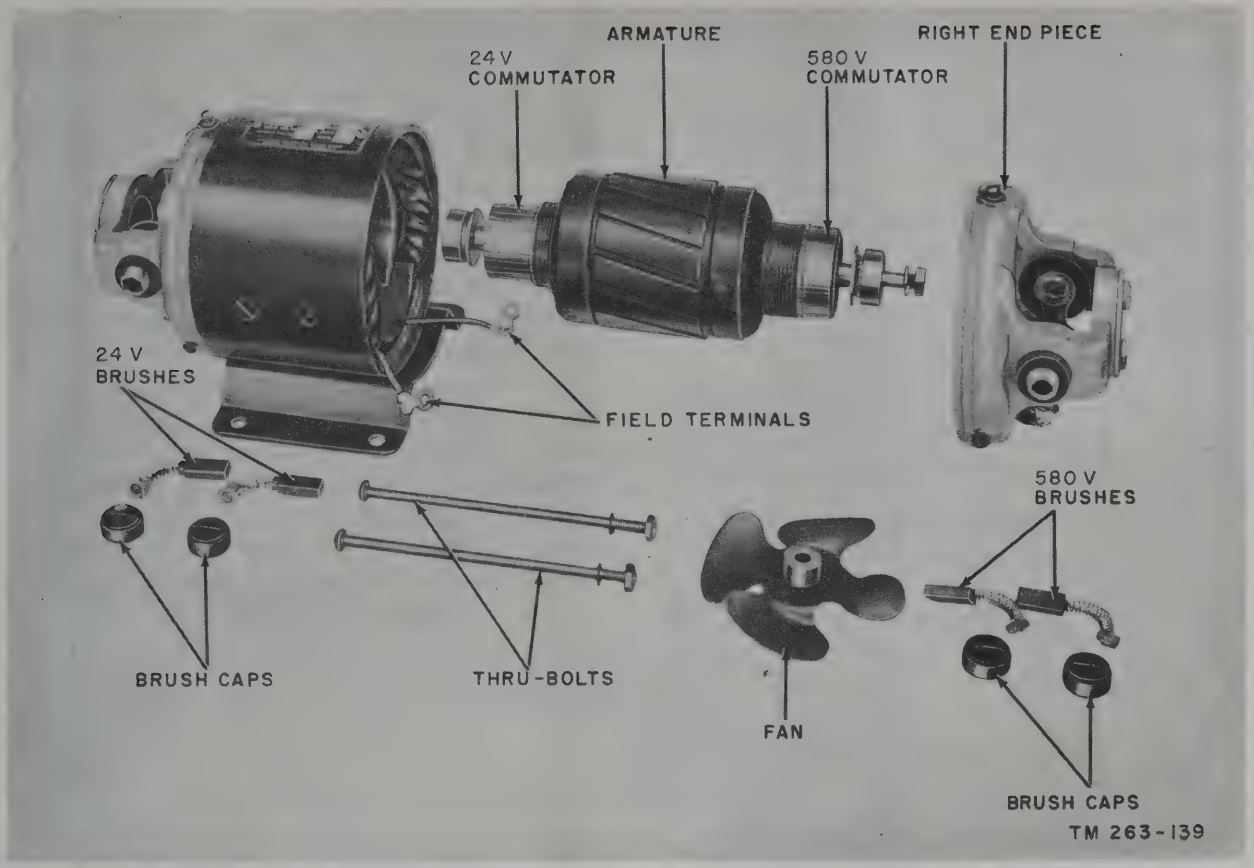

Figure 157. Armature removed from Dynamotor-Power Supply DY–105/GRC–9X.

214. Replacement of Armature of Dynamotor-Power Supply DY–105/GRC–9X

To replace the dynamotor armature, reverse the disassembly procedure given in paragraph 211.

215. Disassembly of Loudspeaker (fig. 158)

No special instructions are necessary to disassemble the loudspeaker.

216. Adjustment of Radio Set

a. Transmitter Tuning Control ① *Knob.* When replacing the tuning knob, be sure the setscrew in the knob is tightened against the flat side of the tuning control shaft. If the setscrew should be tightened incorrectly on the round part of the shaft, the dial readings on the knob will not correspond to the frequency to which the tuning capacitor will actually be tuned.

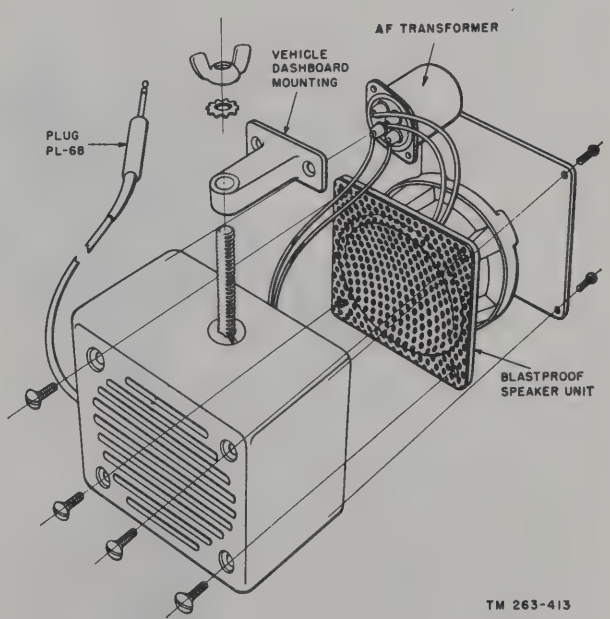

Figure 158. Disassembly of loudspeaker.

b. Adjustment of Index Mark of Transmitter Main Tuning Capacitor. The flat of the main tuning capacitor shaft should be rotated to position for easy tightening of setscrew of the frequency control dial after the assembly is replaced. The setscrew of the frequency control dial must be seated on the flat of the capacitor shaft, otherwise calibration will be inaccurate. To readjust the dial lock, place the lock in approximately the normal position, close the clamp, and tighten the mounting screws.

c. Transmitter Keying Relay K101.

Note. The adjustment of the relays in the radio set are to be made only in fixed depot maintenance centers by skilled personnel, and then only when absolutely necessary.

(1) The necessary sequence of operation of the relay is as follows: Contacts 3 and 4 and 17 and 18 should close before contacts 9 and 10. This is important, otherwise pa tube V103 may be ruined.

(2) The air gap between contacts 4 and 5 and between 1 and 2 should be .035-inch minimum when cntactos 3 and 4 are closed. Contacts 9 and 10 should be open with an air gap of .025-inch minimum clearance when contacts 7 and 8 are closed. Gap between contacts 8 and 9 with relay fully energized should be .018-inch minimum.

(3) The contact pressures of the relay contacts are 29 grams, plus or minus 3 grams.

d. Adjustment of Voltage Regulator in Generator GN–58–(*). A vibrating contact-type voltage regulator is incorporated in the hand generator. Adjust, only when necessary, with Gauge TL–127. Follow the directions inside the top cover of the generator power supply.

e. Adjustment of Key J–45 (fig. 159). No special instructions are necessary for the adjustment of the key.

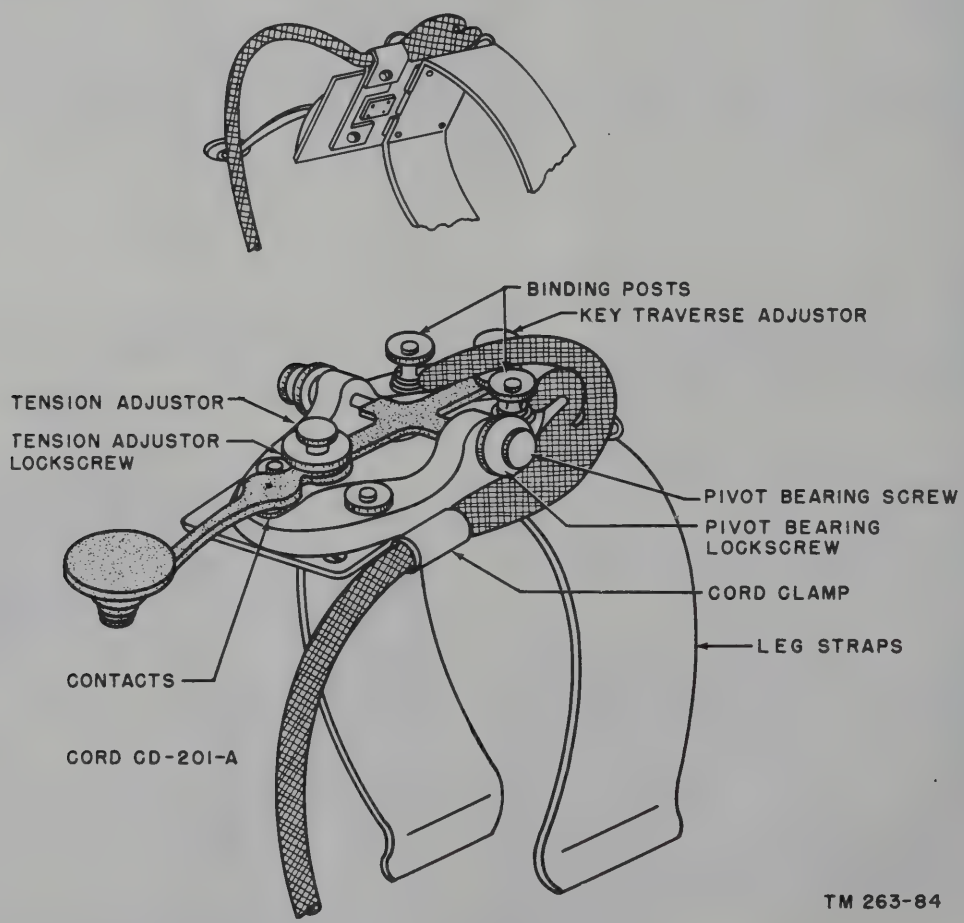

Figure 159. Adjustment of Key J–45.

Section III. RECEIVER ALINEMENT PROCEDURES

217. Test Equipment Used for Alinement of Receiver Section of Receiver Transmitter RT–77(*)/GRC–9

a. Signal Generator. The signal generator should be an accurately calibrated instrument producing modulated rf signals, such as R. F. Signal Generator Set AN/URM–25. In addition to 456 kc, the unit must have a range of from 2 mc to 12 mc, covering the three bands of the receiver. The signal generator should have an output impedance of approximately 50 ohms for best results when the rf and hf oscillator circuits are alined. For if alinement, these values are not critical. The frequency calibration of the signal generator is extremely important in order that the receiver dial calibration be correct.

b. Output Meter. Multimeter TS–352/U (TM 11–5527) is suitable as an output meter when used in conjunction with a 250-or a 4,000-ohm resistor.

c. Other Equipment. Additional test equipment necessary are Headset HS–30–(*), an 120-$\mu\mu$f and an .05-μf capacitor, and an alinement tool. Alinement Tool TL–597/U is recommended.

218. Preliminary Alinement Procedures

a. Turn on the signal generator and allow it to reach a stable operating temperature (approx. 15 min.). Refer to TM 11–5551 R.F. Signal Generator Set AN/URM–25, for the proper calibration of the signal generator.

b. Place the receiver on its right side; connect the output meter by attaching the two wires from it to Plug PL–55, and insert the plug in one of the PHONES jacks. Plug the headset into the other jack. Connect the 250-ohm resistor across the output meter leads.

c. Any of the power supplies issued may be used, but the battery power is recommended, because it is a more constant power source. If battery power is available, attach Cord CD–1119 between BATTERY receptacle J103 on the transmitter and the receptacle on Battery BA–48.

d. Turn control Ⓔ to STANDBY if the battery, or dynamotor supply is used. If Generator GN–58–(*) is used, turn control Ⓔ to SEND.

e. Allow the receiver and signal generator to warm up for about 15 minutes before any attempt is made at alinement.

219. If Alinement (figs. 160 and 161)

Remove the bottom cover of the receiver and refer to figure 111 for the placement of the if transformers. Proceed as follows:

a. Loosen the tuning slug locknuts on the top and bottom of if transformers T4, T5, and T6.

b. Turn A. F. GAIN control Ⓞ and R. F. GAIN control Ⓟ clockwise to the maximum positions. Set control Ⓛ to PHONE. Set the output IMPEDANCE switch in the back of the receiver chassis for 250 ohms.

c. Cut out the avc voltage. This can be done most easily by connecting a shorting wire from the terminal board lead of resistor R1 (fig. 114) to the chassis. The receiver will function normally except that the avc voltage will be shorted to ground.

d. Set the output meter as instructed in paragraph 218*b*.

e. Set the signal generator at 456 kc. Set the modulation at 30 percent at 400 cycles.

f. Connect the ground side of the signal generator to the receiver chassis.

g. Connect the hot lead of the signal generator output to the signal grid, pin 6 of second if. amplifier tube V4, through the .05-μf capacitor.

h. Adjust the signal generator attenuator (rf) to produce an approximate midscale reading on the visual indicating output meter.

Note. As alinement progresses, it may be necessary to reduce the signal generator output to keep the output meter on scale.

i. Adjust the top and bottom screws on if transformer T6 until a maximum reading is obtained on the visual indicating output meter.

j. Tighten the locknuts slightly, maintain the peak output.

k. Repeat *g*, *h*, *i*, and *j* above for each of the other two if. transformers. For transformer T5, connect the hot lead of the signal generator to pin 6 of tube V3. For transformer T4, connect the hot lead to pin 6 of converter tube V2.

l. When the hot lead is on pin 6 of the converter tube, recheck the settings on all the if transformers. Tighten the locknuts snugly; be careful to maintain maximum reading on the output meter.

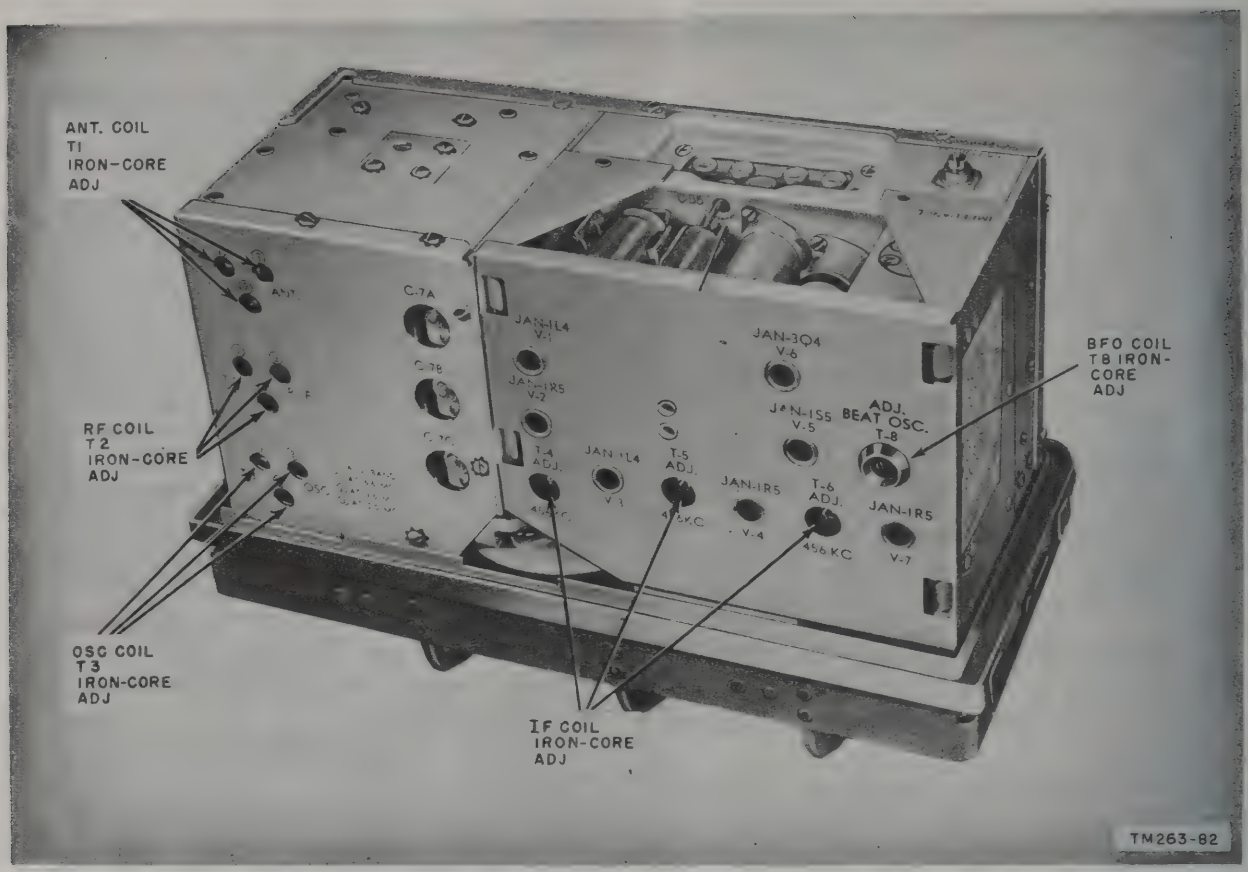

Figure 160. Receiver top, alinement points.

220. Bfo Alinement

To aline the bfo, proceed as follows:

a. Set TUNING dial control Ⓝ at 2 mc.

b. Set control Ⓛ at C.W.

c. Turn A.F. GAIN control Ⓞ clockwise to its maximum position.

d. Set the signal generator at 456 kc *with no modulation.*

e. Clip the hot side of the signal generator output to pin 6 of tube V2.

f. Loosen the locknut on the top of bfo coil T8 and adjust the tuning slug screw for a zero beat.

g. Tighten the locknut, be careful to maintain zero beat after the nut is tightened.

221. Rf Alinement

a. Preliminary Adjustments. For the rf alinement on each of the three bands, proceed as follows:

(1) Set the visual indicating output meter as instructed in paragraph 218*b*.

(2) Set the IMPEDANCE switch on the receiver chassis at 250 ohms.

(3) Set control Ⓛ to PHONE.

(4) Modulate the signal generator output 30 percent at 400 cycles.

(5) Connect the hot lead of the signal generator output to the ANT. binding post through the 120-$\mu\mu$f capacitor. Connect the ground lead to the receiver chassis.

(6) Control Ⓐ in the transmitter must *not* be set at position 9, 10, or 11.

(7) Disable the avc voltage supply as described in paragraph 219*c*.

b. BAND 1 Alinement.

(1) To aline the receiver at the lf end of BAND 1, proceed as follows:

(*a*) Set the signal generator at 6.6 mc.

(*b*) Turn control Ⓜ to BAND 1.

405863

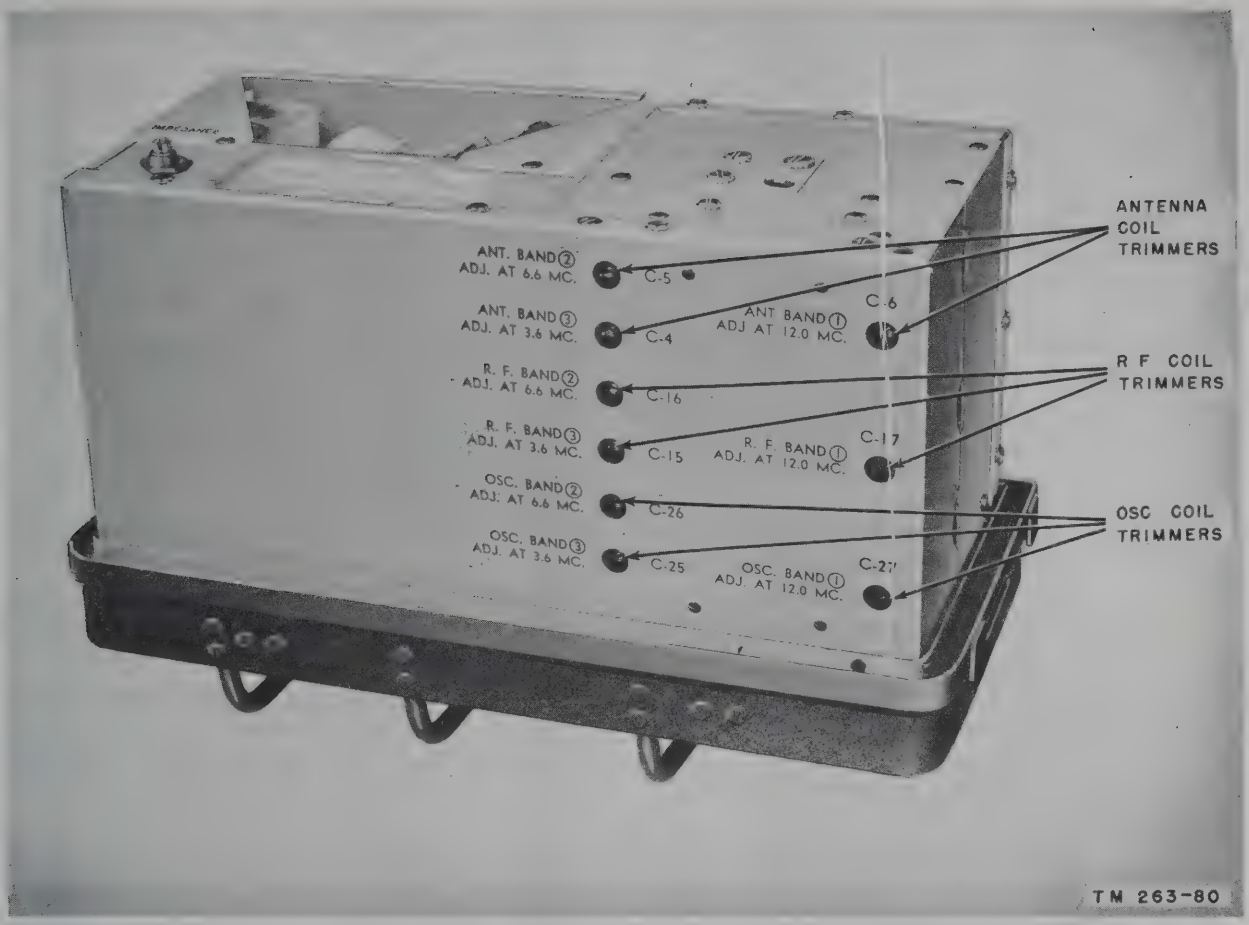
ANTENNA COIL TRIMMERS
R F COIL TRIMMERS
OSC COIL TRIMMERS
ANT. BAND ② ADJ. AT 6.6 MC.
C-5
ANT. BAND ③ ADJ. AT 3.6 MC.
C-4
ANT BAND ① ADJ AT 12.0 MC.
C-6
R. F. BAND ② ADJ. AT 6.6 MC.
C-16
R. F. BAND ③ ADJ. AT 3.6 MC.
C-15
R. F. BAND ① ADJ. AT 12.0 MC.
C-17
OSC. BAND ② ADJ. AT 6.6 MC.
C-26
OSC. BAND ③ ADJ. AT 3.6 MC.
C-25
OSC. BAND ① ADJ. AT 12.0 MC.
C-27
TM 263-80

Figure 161. Receiver bottom, alinement points.

(*c*) Set the receiver TUNING dial to exactly 6.6 mc.

(*d*) To aline the BAND ① coil of rf transformer T2, carefully adjust the coil ① tuning slug screw (on the top of the receiver chassis) for a maximum deflection on the output meter.

(*e*) To aline the BAND ① coil of ANT. transformer T1, carefully adjust the coil ① tuning slug screw (on the top of the receiver chassis) for a maximum deflection on the output meter.

(*f*) To aline the BAND ① coil of OSC. transformer T3, carefully adjust the coil ① tuning slug screw (on the top of the receiver chassis) for a maximum deflection on the output meter.

(2) To aline the receiver at the hf end of band 1, proceed as follows:

(*a*) Set the signal generator at 12 mc.

(*b*) Set the receiver TUNING dial at exactly 12 mc.

(*c*) Carefully adjust OSC. BAND ① trimmer capacitor C27 (on the bottom of the chassis) for a maximum deflection of the output meter.

Note. It may be found that there are three positions of C27 (when rotated 360°) which will give a maximum reading on the output meter. Follow the procedure given in either paragraph 222 or 223 before following step (*d*) below. If there are only two positions found for a maximum output reading when rotating C27 for 360°, then proceed directly to step (*d*) below. Figure 162 shows the three settings of the oscillator trimmer capacitor that give three maximum output readings.

(*d*) Adjust R.F. BAND ① trimmer capacitor C17 (on the bottom of the receiver chassis) for maximum deflection of the output meter.

(*e*) Adjust ANT. BAND ① trimmer capacitor C6 (on the bottom of the chassis) for a maximum deflection on the output meter.

(3) Repeat the procedure given in (2) (*b*) through (*d*) above to correct any errors due to interaction of adjustments. It may be necessary to repeat these operations twice. This depends on the initial degree of misalinement.

c. BAND 2 Alinement.

(1) To aline the receiver at the lf end of BAND 2, proceed as follows:

(*a*) Turn control Ⓜ to BAND 2.

(*b*) Set the signal generator at 3.6 mc.

(*c*) Set the receiver TUNING control Ⓝ to exactly 3.6 mc.

(*c*) Set the receiver TUNING control Ⓝ to exactly 3.6 mc.

(*d*) To aline the BAND ② coil of R.F. transformer T2, carefully adjust the coil ② tuning slug screw (on the top of the receiver chassis) for a maximum deflection on the output meter.

(*e*) To aline the BAND ② coil of ANT. transformer T1, carefully adjust the coil ② tuning slug screw (on the top of the chassis) for a maximum deflection on the output meter.

(*f*) To aline the BAND ② coil of OSC. transformer T3, carefully adjust the coil ② tuning slug screw (on the top of the chassis) for a maximum deflection on the output meter.

(2) To aline the receiver at the hf end of BAND 2, proceed as follows:

(*a*) Set the signal generator at 6.6 mc.

(*b*) Set the receiver TUNING dial to exactly 6.6 mc.

(*c*) Carefully adjust OSC. BAND ② trimmer capacitor C26 (on the bottom of the chassis) for a maximum deflection on the output meter. If three maximum output readings are found, refer to the note given in *b* (2) (*c*) above. Refer to C26 instead of C27.

(*d*) Adjust R.F. BAND ② trimmer capacitor C16 (on the bottom of the receiver chassis) for maximum deflection of the output meter.

(*e*) Adjust ANT. BAND ② trimmer capacitor C5 (on the bottom of the chassis) for maximum deflection on the output meter.

(3) Repeat the 1f alinement of BAND 2 to correct any errors due to interaction of adjustments.

d. BAND 3 Alinement.

(1) To aline the receiver at the 1f end of BAND 3, proceed as follows:

(*a*) Turn control Ⓜ to BAND 3.

(*b*) Set the signal generator at 2 mc.

(*c*) Set the receiver TUNING control to exactly 2 mc.

(*d*) To aline the BAND ③ coil of R.F. transformer T2, carefully adjust the coil ③ tuning slug screw (on top of the receiver chassis) for a maximum deflection on the output meter.

(*e*) To aline the BAND ③ coil of ANT. transformer T1, carefully adjust the coil ③ tuning slug screw (on the top of the chassis) for a maximum deflection on the output meter.

(*f*) To aline the BAND ③ coil of OSC. transformer T3, carefully adjust the coil ③ tuning slug screw (on the top of the chassis) for a maximum deflection on the output meter.

(2) To aline the receiver at the hf end of BAND 3, proceed as follows:

(*a*) Set the signal generator at 3.6 mc.

(*b*) Set the receiver TUNING dial to exactly 3.6 mc.

(*c*) Carefully adjust OSC. BAND ③ trimmer capacitor C25 (on the bottom of the receiver chassis) for a maximum deflection on the output meter. If three maximum output readings are found, refer to the note given in *b* (2) (*c*) above. Refer to C25 instead of C27.

(*d*) Adjust R.F. BAND ③ trimmer capacitor C15 (on the bottom of the

chassis) for a maximum deflection of the output meter.

(*e*) Adjust ANT. BAND ③ trimmer capacitor C4 (on the bottom of the chassis) for a maximum deflection on the output meter.

(3) Repeat the lf alinement of BAND ③ to correct any errors due to interaction of adjustments.

222. Oscillator Trimmer Adjustment, Meter Method

a. In this receiver, there are two signal frequencies which will produce an output for a given oscillator frequency. The correct frequency is lower than the oscillator frequency by an amount equal to the intermediate frequency (456 kc), and the incorrect frequency is higher than the oscillator frequency by the same amount.

b. Because the signal frequency is below the oscillator frequency, the rf and converter circuits are tuned to this frequency to obtain greatest sensitivity in the overall receiver.

c. The incorrect frequency (*a* above) is called the image frequency. The rf and converter circuits are not tuned to this frequency and will almost keep this frequency signal out of the receiver. The sensitivity to the image frequency is consequently very much lower than the sensitivity to the signal frequency.

d. When adjusting an oscillator trimmer that gives two responses (A and B settings or A' and B settings on fig. 162), it is better to shift the signal-generator frequency to the image frequency to assure that the image frequency is above the signal frequency. If the signal frequency is 6.2 mc, the image frequency should be heard when the generator is tuned to 6.2 mc plus twice the intermediate frequency (6,200 kc + 912 kc = 7,112 kc or 7.112 mc). The output of the signal generator must be increased considerably to hear the response at the image frequency. If no signal is heard where the image signal is supposed to be received, tune the generator to the low side of the signal frequency and search for a response at a frequency lower than the signal frequency by an amount equal to twice the intermediate frequency. In this case, 6,200 kc (6.2 mc) —912 kc = 5,288 kc or 5.288 mc. If the image frequency is below the signal frequency, the oscillator trimmer has been adjusted to the wrong response.

223. Oscillator Trimmer Adjustment, Practical Method (fig. 162)

a. The capacitor setting at A gives the same capacity as at A' because of the circular construction of the rotor plates, and either setting may be used. If the capacitor adjustment, however, results in the output meter indicating a peak at three points such as at A, A' or B, the correct setting is either at A or A', which gives the minimum amount of capacity. The minimum or maximum setting of the capacitor cannot be determined from the outside of the receiver; therefore, the panel cover of oscillator trimmer capacitors C25, C26, and C27 must be removed.

b. The tuning procedure is as follows:

(1) Remove the panel that covers oscillator trimmer capacitors C25, C26, and C27 (fig. 161).

(2) Turn the capacitors to their minimum capacity position (plates completely unmeshed).

(3) Refer to paragraph 221*b*, *c*, and *d* for adjusting C25, C26, and C27. Turn the capacitors until a first maximum is reached. This puts the oscillator

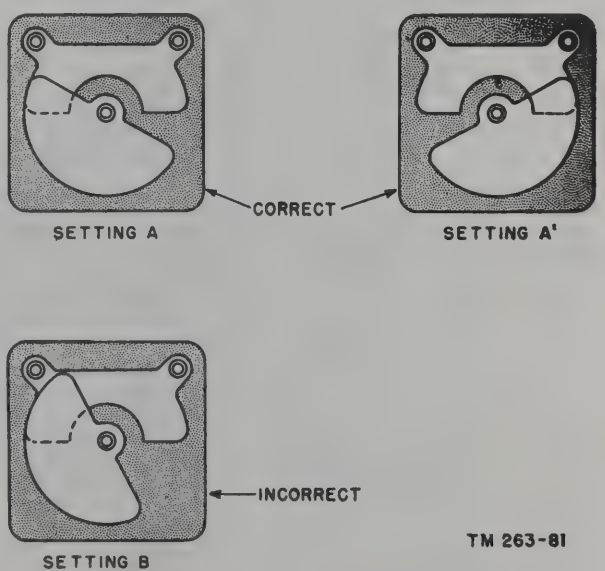

Figure 162. Determination of correct settings of oscillator trimmer capacitor C25, C26, and C27.

above the signal frequency for the correct setting.

(4) Replace the panel cover. This adds capacity to the circuit, and a fine adjustment of the capacitors is needed.

(5) *Slightly rock* the oscillator trimmers for a peak output reading on the output meter.

224. Crystal Calibrator Oscillator Alinement

The adjustment of the iron core slug in transformer T7 is made by the manufacturer and further adjustment may be unnecessary. The position of the slug will not change the frequency output of the crystal oscillator to any extent; therefore, do not attempt to adjust the crystal oscillator output.

Section IV. TRANSMITTER ALINEMENT PROCEDURES

225. Test Equipment Used for Alinement of Transmitter Section

Note. Transmitter alinement without test equipment is impossible. Never attempt to aline the transmitter without a multimeter.

a. To aline the transmitter, use the following equipment:

Item	Common name	Technical manual
Frequency Meter AN/URM–79 or equivalent.	Frequency meter.	TM 11–5094
Multimeter TS–352/U or equivalent that has a 1,000-ohm-per-volt section.	Multimeter	TM 11–5527
Ammeter IS–76	Rf meter	

Note. The receiver may be used as a frequency meter when placed in the CAL. position of control Ⓛ.

b. It may be desirable to use a dummy antenna instead of an actual radiator. The dummy antenna for transmitter tests is a 20-ohm, 20-watt noninductive resistor in series with a 70-$\mu\mu$f capacitor and an 0- to 5-ampere rf meter. This is equivalent to a 15-foot whip antenna. The components for the whip-type dummy antenna are listed below:

(1) 5 each resistors, 100 ohms, 5 watts ± 10 percent (connected in parallel to present 20 ohms at 20 watts).

(2) 1 each capacitor, 70 $\mu\mu$f ±20 percent, 500 vdcw.

Note. A 5,400-ohm noninductive resistor is equivalent to a half-wave antenna (control Ⓐ in REEL position).

226. Transmitter Alinement Procedure (figs. 163 and 164)

Warning: Be careful, because the cap of the output tube and many other points carry approximately 500-volts dc when the power is turned on.

a. Remove the power supply cable from the transmitter.

b. Unfasten the catches and remove the transmitter from its case. Be careful not to damage the pa tube.

c. Attach the power cable to the power receptacle on the front of the panel.

d. Set switch Ⓓ to PHONE–HI.

e. Set switch Ⓕ to BAND 1–MO.

f. Turn the ANT. SELECTOR switch Ⓐ to WHIP position 4, and adjust the ANTENNA TUNING control Ⓒ to 10. Do not use any position lower than 10, because misalinement will result.

g. Set the frequency meter to 11,200 kc.

h. Set control Ⓗ (OSC. CAL. control) to mid-position.

Note. If the dummy antenna is to be used (par. 225*b*), connect the meter end to the chassis or GND. post on the receiver. Connect the resistor end to the ANT. post on the transmitter.

i. Set the FREQ. CONTROL Ⓘ knob on the transmitter to the setting indicated on the calibration chart for 11,200 kc.

j. Press the microphone button and listen in the phones for the signal from the transmitter. Adjust the mo BAND 1 (MO) trimmer (C-106B) to exactly zero beat. If the CAL. position of control Ⓛ in the receiver is used instead of the frequency meter, proceed as instructed in paragraph 58.

Note. Because the frequency meter can give beat notes between harmonics of the transmitter and frequency meter, measurements of the transmitter frequency should be taken at several points on the dial to be sure that the transmitter has been alined to the cor-

rect frequency, and that it has calibrated closely over its entire range. If a check is made at several points and it is found that only the one at which the adjustment has been made is closely on frequency and that the other points checked are considerably in error, it is probable that the wrong beat note was used in the frequency meter and that none of the frequencies is correct.

k. Connect the negative lead of the 1,000-ohm-per-volt rang of the multimeter to point No. 5 on the metering socket and connect the positive lead to the chassis or pin 7; use the 250-volt scale on the multimeter.

l. Adjust the doubler trimmer (C111) BAND 1 for *maximum* output indication on the meter.

m. Use approximately a 3-volt scale of the multimeter and connect the positive lead of the meter to point No. 2 and the negative lead to point No. 8 of the metering socket.

Warning: Be careful, because both ends of the meter connected in this manner are approximately 500 volts above chassis ground.

n. Adjust the power amplifier trimmer (C-118) BAND 1 for *minimum* indication on the meter.

o. Set the FREQ. CONTROL ① knob on the transmitter to the setting indicated on the calibration chart for 6.6 mc. Use the 250-volt scale and connect the negative meter lead to pin 5 and the positive lead to pin 7 of the metering socket. Loosen the locknut and adjust the BAND 1 DOUBLER screw on coil T104 (core) for maximum voltage and then tighten the locknut.

p. Using the 2.5-volt scale, connect the negative meter lead to pin 8 and the positive meter lead to pin 2 at the metering socket. Loosen the locknut and adjust BAND 1 (PA) iron core for minimum voltage on the meter and then tighten the locknut.

q. Repeat the procedures in *i* through *n* (omitting *j*) above in their proper sequence

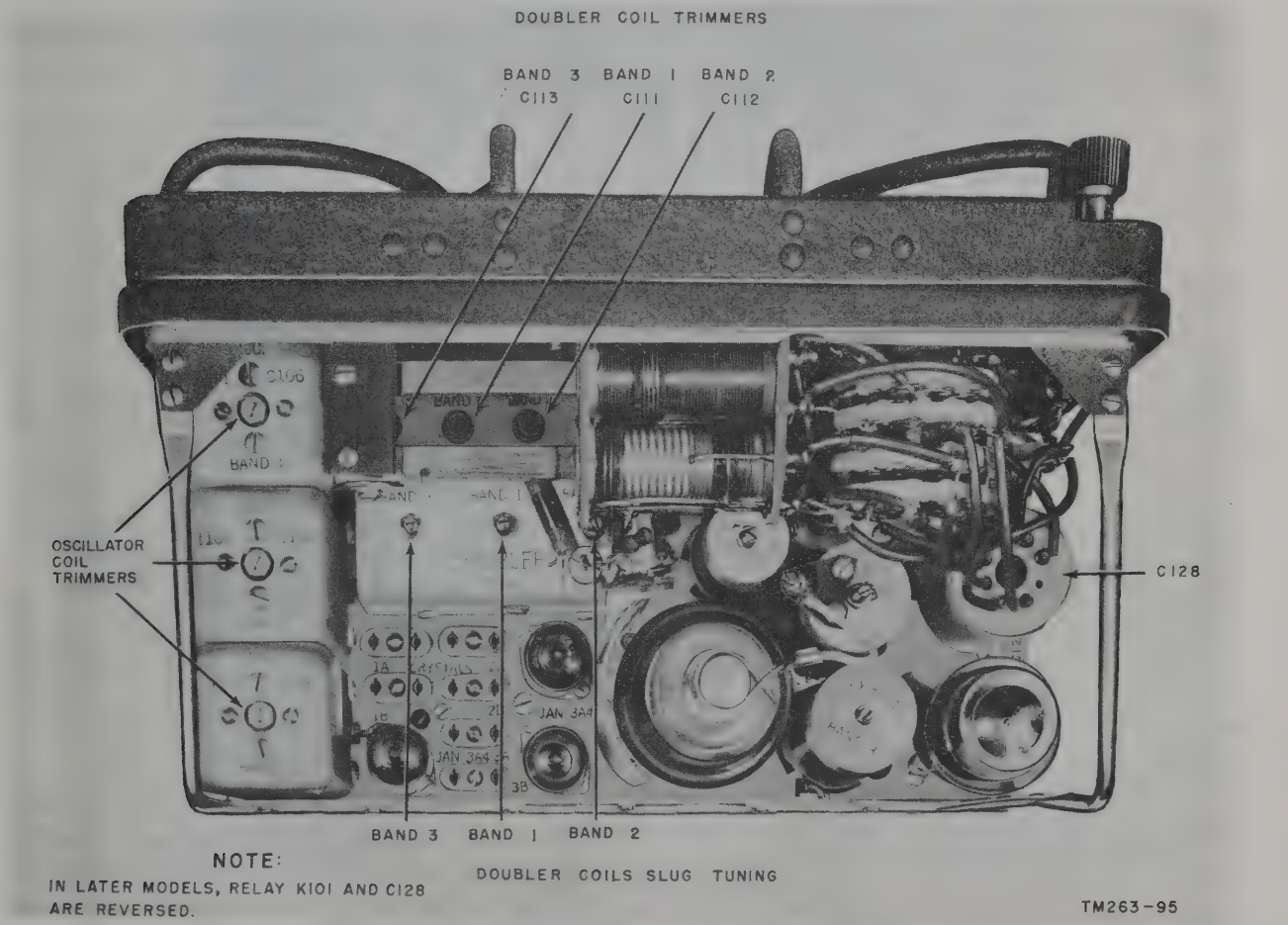

Figure 163. Transmitter alinement points, top of chassis.

until further adjustment will give no improvement.

r. Connect a 5,000-ohm carbon resistor from the ANT. post on the transmitter to a bare metal part of the chassis of the transmitter. Turn the ANT. SELECTOR switch Ⓐ to REEL 5, 6, 7, or 8, whichever will resonate. Rotate the ANTENNA TUNING knob (control Ⓒ) until the INDICATOR Ⓑ glows brightest.

s. As a final check to insure proper alinement, tune the transmitter at one end of the frequency band and then at the other end. At the same time, adjust knobs Ⓐ and Ⓒ at each end of the band. This will make the indicator glow with normal brilliance and will assure that the antenna coupling circuits can be tuned to resonance at each end of the band.

t. Follow the same procedure for BANDS 2 and 3; use alinement frequencies of 6,100 kc and 3,600 kc for BAND 2 and 3,300 kc and 2,000 kc for BAND 3.

u. Remove the power cable as a safety measure.

v. Replace and fasten the transmitter in its case.

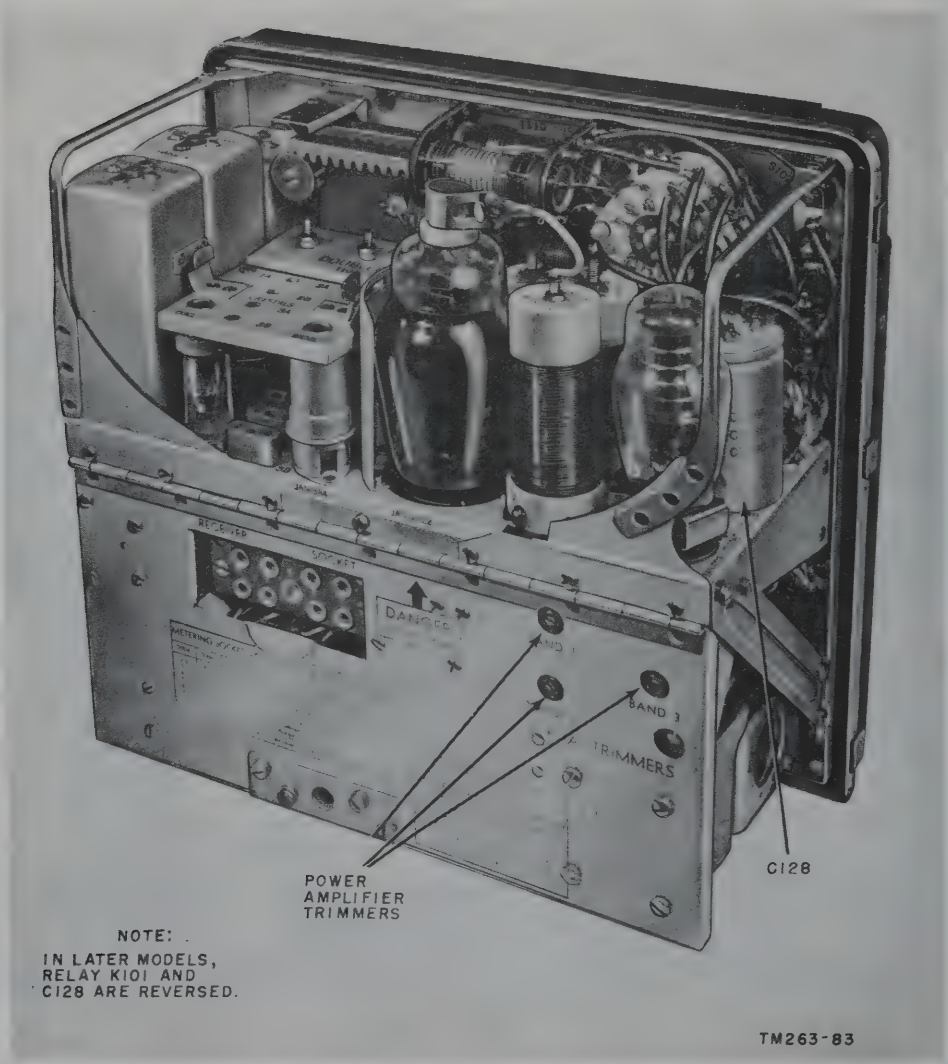

Figure 164. Transmitter alinement points, back of chassis.

Section V. FINAL TESTING OF RECEIVER SECTION

227. General

Paragraphs 244 through 264 are intended as a guide to be used in determining the quality of a repaired Radio Set AN/GRC–9(*). The minimum test requirements outlined in paragraphs 230 through 264 may be performed by maintenance personnel with adequate test equipment and the necessary skills. Repaired equipment meeting these requirements will furnish uniformly satisfactory operation.

228. Test Equipment Required

The instruments needed for testing the required equipment are listed below.

Item	Common name	Technical manual
R. F. Signal Generator Set AN/URM–25.	Signal generator.	TM 11–5551
Multimeter TS–352/U	Output meter	TM 11–5527

229. Receiver Section, Preliminary Adjustments

All receiver measurements are made under the test conditions listed below, unless otherwise indicated. The signal generator is connected to the ANT. binding post on the transmitter through the dummy antenna specified above. The output meter is connected to one of the PHONES jacks. The receiver is tuned to resonance at each of the test frequencies. The transmitter control Ⓒ is set at the approximate center of its range, and the antenna selector switch (control Ⓐ) is set to WHIP position 1.

Dummy antenna ..... 120 $\mu\mu$f.
Standard output ..... 10 mw or 6.3 volts in a 4,000-ohm noninductive load.
Load impedance ..... 4,000 ohms noninductive.
Power ratio ..... Signal-plus-noise to noise ratio (10:1).
Modulation ..... 30 percent at 400 cycles.
Controls Ⓞ and Ⓟ ... Set at maximum.

230. Sensitivity Test

Sensitivity test input is expressed in microvolts and is the least input signal which, when modulated 30 percent at 400 cycles and fed into receiver, will produce the standard output of 10 mw with controls Ⓞ and Ⓟ at maximum settings. The test is conducted to give a signal-plus-noise ration of 10 to 1. The sensitivity is measured at the following test frequencies.

Band	High	Medium	Low
1	12.0 mc	9.3 mc	6.6 mc
2	6.6 mc	5.1 mc	3.6 mc
3	3.6 mc	2.8 mc	2.0 mc

a. CW. The procedure is as follows:

(1) Turn control Ⓛ to C.W.

(2) Adjust TUNING control Ⓝ to the test frequency.

(3) Set the signal generator to approximately the same test frequency, using no modulation, to provide a 1,000-cycle beat note. Set the output meter as instructed in paragraph 218*b*.

(4) Adjust the signal generator output control until the output meter reads 10 mw.

(5) Detune the signal generator to at least 20 kc away from resonance and adjust the A. F. GAIN control Ⓞ until the output meter reads 1 mw.

(6) It is probable that when the signal generator is set again at the resonant frequency, the output meter no longer reads 10 mw. Adjust the signal generator output until the output meter reads 10 mw.

(7) Repeat steps 5 and 6 above until the condition is maintained where the output meter reads 10 mw with the signal generator on resonance and 1 mw with the generator detuned, *for the same setting of receiver and signal generator volume controls.* The sensitivity is then the signal voltage input to the receiver when the output meter records 10 mw after the condition in step 7 is found. This reading is the sensitivity for a 10 to 1 signal-plus-noise to noise ratio.

b. Phone.

(1) Turn control Ⓛ to PHONE. Adjust R. F. GAIN control Ⓟ to maximum.

(2) Adjust TUNING control Ⓝ to the test frequency.

(3) Set the signal generator to the same test frequency, modulated 30 percent at 400 cycles.

(4) Adjust the signal generator output control until the output meter reads 10 mw.

(5) Remove the modulation from the signal input and adjust the A. F. GAIN control Ⓞ until the output meter reads 1 mw.

(6) When the signal is modulated again, the output may no longer be 10 mw. Readjust the signal generator output until it is 10 mw.

(7) Repeat (5) and (6) above until the condition is maintained where the output meter reads 10 mw with the signal generator modulated and 1 mw with the generator unmodulated, *for the same setting of receiver and generator volume controls.*

(8) The sensitivity is then the signal voltage input to the receiver when the output meter records 10 mw and when the condition in step 7 is found. This reading is the sensitivity for a 10 to 1 signal-plus-noise to noise ratio.

c. Sensitivity Values. For a receiver output of 10 mw at a signal-plus-noise to noise ratio of 10, the sensitivity figure of the receiver should be not more than 3 microvolts for cw reception, and not more than 10 microvolts for am reception.

231. Selectivity Test

The selectivity test gives an indication of the shape of the bandwidth or band-pass characteristics of the tuned circuits in the receiver. The selectivity is measured at 6,600 kc (BAND 2).

a. The signal generator is set at 6,600 kc, with a 400-cycle signal modulated at 30 percent, and it has an initial output of 10 microvolts. The output meter is set as described in paragraph 218*b*.

b. With control Ⓟ set at maximum, receiver volume control Ⓞ is adjusted so that a 10-mw output is indicated on the output meter. These controls are not changed for the remainder of the test.

c. The input voltage from the signal generator is successively increased to 2, 10, 100, and 1,000 times its initial value and, at each value of signal strength, the signal generator is detuned *on each side* of 6,600 kc so that the receiver will produce exactly a 10-mw output.

d. The selectivity of the receiver is within the following limits, using the procedures in *a* through *c* above.

Signal generator input	Total bandwidth (kc)	
	Maximum*	Maximum
2 x initial setting	3.5	
10 x initial setting		12
100 x initial setting		20
1000 x initial setting		30

* Indicates that for a signal-generator input of 2 x initial setting, there should not be less than 3.5 kc between the two points (on either side of 6,600 kc) at which the power output will be equal to the 10-mw prevailing at the initial input of 10 microvolts.

232. Image Frequency Rejection Ratio

a. This is defined as the ratio of signal input voltage at the image frequency to the signal input voltage required at the desired frequency, with the receiver power output being the same for both frequencies. The image frequency rejection ratios for the receiver should be as follows:

Band	*Ratio*
1	Greater than 50 to 1
2	Greater than 250 to 1
3	Greater than 1000 to 1

b. The image frequency rejection ratio is determined at the high, middle, and low end of each band. Proceed as follows:

(1) Set the output meter as instructed in paragraph 218*b* and set the output voltage of the signal generator at 10 microvolts with a 400-cycle signal modulated at 30 percent.

(2) Controls Ⓞ and Ⓟ are adjusted to produce a 10-mw output indication on the output meter.

(3) Tune the signal generator to the image frequency of the resonant frequency to which the receiver TUNING control Ⓝ is set. The image fre-

quency is 912 kc plus the resonant frequency. Image ratio is obtained by dividing the microvolts necessary to produce a 10-mw output at image frequency (912 kc plus resonant frequency) by the microvolts required for the same 10-mw output at the resonant frequency, with the gain controls (Ⓞ and Ⓟ) in the same position for the two measurements.

233. If. Rejection Ratio

The if. rejection ratio should be greater than 100 db at all frequencies within the 2-mc to 12-mc bandwidth of the receiver. It is measured at the low end of each band, 2 mc, 3.6 mc, and 6.6 mc. The output meter is set as instructed in paragraph 218*b*. The input voltage of the signal generator is 10 microvolts at resonance. Controls (Ⓞ and Ⓟ) are adjusted to produce 10-mw output. The ratio is obtained by dividing the microvolts, necessary to produce 10-mw output at the if. (456 kc), by the microvolts required for the same output at the resonant frequency, with controls Ⓞ and Ⓟ in the same position for the two measurements.

234. Af Output

a. The maximum power output of the receiver should not be less than 90 mw at all frequencies from 250 to 2,500 cps (cycles per second) for both the 250- and 4,000-ohm output impedances. For these impedances, the maximum undistorted output (less than 10 percent distortion) should be not less than 75 mw at all frequencies from 250 to 2,500 cps.

b. The input level of the test signal is set to 500 microvolts at 5,100-kc modulated at 30 percent, and the receiver is tuned to resonance. The af is varied, and receiver volume control Ⓞ is adjusted to maximum undistorted output at each af. Maximum undistorted power output is defined as the maximum power output which contains less than 10 percent total harmonic distortion (root-mean-square voltage). For the 4,000-ohm impedance test, substitute the 4,000-ohm resistor for the 250-ohm resistor (par. 218*b*).

235. Audio Fidelity

a. With both 250- and 4,000-ohm output impedances, the maximum undistorted output at all frequencies from 250 to 2,500 cps should be within +2 db or —5 (decibel) of the output at 400 cps.

b. The input level of the test signal is set to 500 microvolts at 6,600 kc (BAND 2) and modulated at 30 percent at 400 cps. The receiver is tuned to 6,600 kc and controls (Ⓞ and Ⓟ) are set to produce an output meter reading of 10 mw. The volume controls should not be touched for the remainder of the test. The am frequency is varied, while the modulation remains at 30 percent for all modulation frequencies.

236. Calibration Accuracy

a. The dial calibration should be accurate to within 30 kc on BANDS 2 and 3 and 50 kc on BAND 1.

b. The calibration accuracy of the receiver is checked at 200-kc intervals over the entire frequency range of each band, starting at 2,000 kc. The dial is turned in the direction of the increasing frequency for each check point. Refer to paragraph 52 for calibration operation.

237. Crystal Calibrator Circuit

a. With the receiver set to CAL. and controls (Ⓞ and Ⓟ) set at maximum, the power output of the receiver is measured at each crystal check point as the receiver is tuned through the entire frequency range. The power output indicated by the output meter should be a minimum of 10 mw.

b. The crystal calibrator oscillator circuit should have an accuracy of plus or minus 20 cps at 200 kc when using standard Crystal Unit CR–2/U which is calibrated to ±18 cps.

c. The spurious response should have a rejection ratio of more than 27 db compared to the crystal check points on either side of the particular spurious response. With the receiver set to CAL. and controls Ⓞ and Ⓟ set to maximum, the receiver is tuned over the entire range and spurious responses are noted. The receiver is tuned to the weaker of the crystal check points on either side of each spurious response, and the R. F. GAIN control Ⓟ is reduced so that the receiver output is 50 mw. The receiver then is tuned to the spurious re-

sponse without disturbance of the gain control. The spurious response power output reading should be less than .1 mw.

238. Beat Frequency Oscillator

The bfo is checked at 6,600 kc (BAND 2). When left in this position, controls ⓞ and Ⓟ are adjusted to produce an output of 50 mw at a signal input of 500 microvolts. When Headset HS–30–(*) is used, the audible beat note is distinct, (without distortion), as the signal input voltage is increased to 500 millivolts.

239. Resettability

a. The resettability is a measure of the backlash in the tuning gears, and it is checked at the hf end of each band. Each test frequency is approached from the clockwise and counterclockwise directions, and the difference in readings is recorded. There should not be more than a 5-kc difference in the dial reading when the test frequency is approached from the clockwise and counterclockwise directions.

b. To check the resettability of the tuning gears, set the receiver controls as indicated.

(1) Set controls ⓞ and Ⓟ to their midsettings.
(2) Set control Ⓛ to CAL.
(3) Set control Ⓜ to BAND 1.
(4) Turn control Ⓝ to 12.0 mc.

c. Tune control Ⓝ for a zero beat by approaching the signal frequency from a clockwise direction. Measure this frequency with the frequency meter.

d. Tune control Ⓝ for a zero beat by approaching the signal frequency found in *c* above but from a counterclockwise direction. Measure the frequency as in *c* above.

240. Spurious Responses

Spurious responses caused by harmonics of the hf oscillator and bfo should have a rejection ratio of more than 50 db over the entire tuning range. Spurious responses are measured at the hf end of each band. With 10 microvolts input at the receiver signal frequency, control ⓞ and Ⓟ are adjusted to give a 10-mw output. The input is then adjusted to 10,000 microvolts, and the signal generator frequency is adjusted over the frequency range of ±2 mc of the test frequencies. If spurious responses occur, the input should be reduced to give an output of 10-mw. The voltage ratio of this input to the resonant frequency input is recorded as the spurious response ratio.

241. Current Drain

The receiver current drain is measured with the receiver set for cw operation, using a 0- to 50-ma meter in series with the B supply and a 0- to 1-ampere meter in series with the A supply. At 105- and 1.4-volt input, the B drain should be less than 20 ma and the A drain should be less than 500 ma, respectively, under conditions of maximum current consumption. Multimeter TS–352/U may be used for these measurements.

242. Sidetone

The receiver should provide clear monitoring when the transmitter is set for cw, mcw, or voice operation. With the SIDE TONE VOL. control Ⓖ set at maximum, the sidetone output at the receiver jack should be a minimum of 10 mw.

243. Receiver Section Tests at Reduced Dc Supply Voltage Input

a. Sensitivity. With a 1.2-volt filament voltage, a plate voltage of 75 volts and an output of 10 mw, the sensitivity should be not less than 50 microvolts for voice reception and not less than 25 microvolts for cw reception.

b. Calibrator Output. The crystal calibrator output under lv conditions is measured by the use of headphones at the receiver output jacks. With 1.2-volts filament voltage and a plate voltage of 75 volts, the calibrator output should be audible over the frequency range within two consecutive crystal check points.

c. Filament Voltage Regulation. The filament voltage is measured at a tube socket when operating the filaments through a 10.6-ohm dropping resistor in series with a 6-volt source and then with an 8-volt source. The filament voltage should be greater than 1.2 volts for a 6-volt source and less than 1.7 volts for an 8-volt source.

244. Test Equipment Required

a. The instruments needed for final testing of the transmitter are listed below:

Item	Technical manual	Common name
Ammeter IS–76		Rf meter
Multimeter TS–352/U	TM 11–5527	Multimeter
Oscilloscope OS–8A/U	TM 11–1214	Oscilloscope
Audio Oscillator TS–382A/U.	TM 11–2684A	Af oscillator
Frequency Meter FR–67/U.	TM 11–2698	Frequency counter.
Electronic Multimeter TS–505/U.	TM 11–5511	Vtvm
Frequency Meter AN/URM–9.	TM 11–5094	Frequency meter.
Electronic Multimeter ME–6A/U.	TM 11–5549	Ac vtvm

b. In addition to the instruments listed above, the following items are required for final testing of the transmitter:

1 each capacitor, 1 $\mu\mu$f $\pm$20 percent.
5 each resistors, 100 ohms, 5 w $\pm$10 percent (connected in parallel to present 20 ohms at 20 watts).
1 each capacitor, 70 $\mu\mu$f $\pm$20 percent, 500 vdcw.

245. Transmitter Section, Preliminary Adjustments

Unless otherwise specified, all transmitter measurements are made under the following test conditions:

a. For the dummy antenna, use a 20-ohm, 20-watt noninductive resistor in series with a 70-$\mu\mu$f capacitor and 0- to 5-ampere rf meter. This is equivalent to a 15-foot whip antenna. Connect the meter end to the chassis or ground side.

Note. A 5,400-ohm noninductive resistor is equivalent to half-wave antenna (control Ⓐ in REEL position).

b. Control Ⓓ is set to PHONE–HI position unless otherwise stated.

246. Power Output

With input voltages of 6.3 volts filament and 500 and 425 plate voltages at the POWER receptacle, the power outputs should not be less than those listed in the table below. The ANTENNA TUNING control Ⓒ is adjusted to maximum meter deflection for each frequency. The power output is: (ANTENNA CURRENT)^2 (20 ohms). The input power to the transmitter is obtained by measuring the total dc plate and screen currents of the pa tube. The input power to the transmitter should be less than the input powers listed in the table below.

Note. Screen current cannot be measured directly but may be computed from the following procedure: Measure the voltage between pins 3+ and 7— at the metering socket. Divide this voltage by 30,000 ohms. Denote this current as I 1. Measure the voltage between pins 2+ and 3— at the metering socket. Divide this voltage by 10,000 ohms if switch S105 is set for high power; divide by 40,000 ohms if switch S105 is set for lower power. Denote this current as I 2. The value of screen current is I 2–I 1.

Operating voltages	Plate and screen input power (watts)	Position of control D	Power output (watts)	Frequency (kc)	Frequency band
500	75 to 100	CW HI	7 to 8	2,000	3
500	60 to 80	PHONE HI	2 to 3.5	2,000	3
500	60 to 70	CW LI	3 to 3.5	2,000	3
500	40 to 50	PHONE LO	.3 to .5	2,000	3
500	80 to 100	CW HI	12	3,600	3
500	60 to 80	PHONE HI	3 to 4	3,600	3
500	75 to 100	CW HI	10 to 12	3,600	2
500	60 to 80	PHONE HI	3.5 to 5	3,600	2
500	75 to 100	CW HI	12	6,600	2
500	60 to 80	PHONE HI	3 to 5	6,600	2
500	75 to 100	CW HI	7.5 to 12	6,600	1
500	60 to 80	PHONE HI	3 to 5	6,600	1
500	75 to 100	CW HI	12	12,000	1
500	60 to 80	PHONE HI	5	12,000	1
425	30 to 60	CW LO	2 to 3	2,000	3
425	20 to 40	PHONE LO	.2 to .3	2,000	3

247. Microphone Input Voltage

a. In phone operation for audio-modulation frequencies between 250 and 3,000 cps, 100 percent modulation should be obtained for an input of less than .5 volt to the primary of microphone transformer T112.

b. To check the microphone input voltage required for 100 percent modulation, proceed as follows:

(1) Turn the transmitter on.
  (*a*) Set control Ⓓ to HI–PHONE.
  (*b*) Set control Ⓔ to SEND.
  (*c*) Set control Ⓕ to MO–BAND 1.

c. Tune for maximum output as shown in INDICATOR Ⓑ.

d. Connect the oscilloscope between the antenna terminal post and the receiver GND. post and place the graph in front of the oscilloscope tube.

e. Connect the af oscillator to the MIKE jack using a 250 cps signal.

f. Tune the transmitter to the middle of BAND 1.

g. Increase the output of the af oscillator until 100 percent modulation is indicated on the oscilloscope.

h. Read value on the ac voltmeter connected across the af oscillator output. The reading should be .5 volts or less.

i. Repeat the above procedure (*b* through *h* above) except to turn control Ⓓ to the LO position.

j. Repeat above procedure (*b* through *i* above) with the af oscillator set for 400, 1,000, and 3,000 cps.

k. Repeat entire procedure with control Ⓕ at MO–BAND 2 and then to MO–BAND 3.

l. Reduce the modulation to 50 percent as seen on the oscilloscope. Check the wave form for distortion with the aid of the graph. The distortion should be less than 10 percent on all three bands with all audio frequencies used.

248. Mcw and Cw Operation

a. The frequency of the modulating tone in mcw operation should be between 700 and 1,100 cps. The transmitter should be modulated from 70 to 100 percent on mcw and no modulation should occur on cw.

b. The transmitter is set up for normal operation and the sidetone control is adjusted for maximum output. The percentage of modulation, as viewed on an oscilloscope (par. 247*d*), is checked for both high and low power mcw operation at 8 mc.

c. On cw operation, no trace of the sidetone signal should be on the rf carrier.

d. To check the modulation tone, use either the frequency counter or the combination of the oscilloscope and af oscillator.

249. Netting Operation

a. At all frequencies in the range of the radio set, the transmitter should be capable of netting with another radio transmitter within ±1,000 cps.

b. The transmitter is set up for high-power, mo, and cw operation (HI–MO–CW). The receiver of the radio set is zero-beat to the frequency meter adjusted to 12 mc. The transmitter is adjusted to zero-beat with the receiver in the NET position, then the transmitter is set to normal cw operation and the frequency of the beat note in the frequency meter should be checked.

250. Overload Relay K102

a. The overload relay in the pa circuit should open during crystal operation when mistuning of FREQ. CONTROL Ⓘ exceeds 7 percent of the operating frequency. Also the overload relay should de-energize before the pa grid voltage drops below 10 volts.

b. The transmitter is set up for CW–HI–XTAL operation for frequencies in the middle of each band. The transmitter tuning dial is set to the crystal frequency, and is tuned above and below until the overload relay opens. The dial readings and the pa grid voltage should be recorded and compared to *a* above.

251. Metering Socket Readings

a. The transmitter is set for high-power, mo, and cw operation with the 20-ohm, —20 watt, 70-$\mu\mu$f dummy antenna load on the antenna circuit. The plate supply should be adjusted to 500 volts and the filament supply to 6.3 volts. The antenna circuit should be resonated, and the voltages at the metering socket should be recorded for cw operation. The meas-

urements are made by using the 20,000-ohm-per-volt range of the multimeter. Plate current (with no load) measurements are made with the dummy antenna removed.

b. The following readings should be obtained:

Metering socket pins		Circuit	Value
1+	7—	Pa filament voltage	+6.3
2+	7—	Pa plate voltage	+500 volts
2+	8—	Pa plate current (loaded).	BANDS 1, 2, and 3, 110 ma; maximum.
		Pa plate current (unloaded).	Less than 30 ma on all bands.
3+	7—	Pa screen grid voltage.	275 volts maximum on all bands.
4+	7—	Pa suppressor grid bias (CW).	+6.3 volts
4—	7+	Pa suppressor grid bias (PHONE).	—40 volts
5—	7+	Pa signal grid bias	—46 to —70 volts
6+	7—	Master oscillator plate voltage.	+105 volts
		Modulator plate voltage.	
7+	7+	Terminal 7 is grounded to the transmitter chassis.	0 volt

252. Keying Relay and Keying

a. It should be possible to key the transmitter at speeds up to 25 words per minute either in the MO or XTAL position of control Ⓕ. The keying relay should meet the requirements given in paragraph 216*c*.

b. To check the keying, proceed as follows:

(1) Turn the transmitter on.

(*a*) Set control Ⓓ to CW–HI.

(*b*) Set control Ⓕ to MO–BAND 1.

(*c*) Turn control Ⓘ to any frequency.

(2) Plug the keying to the KEY jack and key at 25 words per minute.

(3) INDICATOR bulb Ⓑ should flash at the same rate as (2) above.

(4) Turn control Ⓕ to XTAL–BAND 1 and turn control Ⓘ to the crystal frequency.

(5) Repeat (2) above and look for the same indication as in (3) above.

253. Frequency Stability Versus Input Voltage

a. The transmitter is connected to the dummy antenna and is fully loaded for high-power cw operation.

b. The transmitter is tuned to 12,000 kc and is allowed to warm up for 5 minutes at input voltages of 5.4 and 400 volts. The frequency is checked by a frequency meter and the transmitter is set to zero beat with the frequency meter. The supply voltages are increased to 7.5 and 700 volts. The frequency meter is then zero-beat to the transmitter. The difference in readings is considered the drift.

c. The frequency drift of the mo should not exceed .02 percent for a variation from 5.4 volts filament and 400 volts plate to 7.5 volts filament and 700 volts plate.

Section VII. FINAL TESTING OF POWER SUPPLIES

254. Vibrator Power Supply PE–237, Voltage Output and Time Delay Relay Test

a. With a 6-, 12-, or 24-volt vehicular battery connected to the input of the power supply, the voltage outputs are as indicated below. These measurements are made with the power supply loaded. Refer to paragraph 187 for measurement disassembly.

Terminals	Circuit	Value in volts (dc)
20 to 24 (ground).	Transmitter filaments	6.3
21 to 24	Receiver plates (SEND)	105
22 to 24	Receiver filaments (STANDBY).	1.4
23 to 24	Receiver filaments (SEND)	1.4
32 to 24	Transmitter plates (V102 and V103).	500
33 to 24	Receiver plates (STANDBY).	100
34 to 24	Keying relay K101	6.0

b. The voltages in the table above should be obtained approximately 100 milliseconds after time delay relay 743 is energized.

255. Vibrator Power Supply PE–237, Ripple Voltage Test

The maximum ripple voltages for the vibrator power supply as measured with Electronic Multimeter ME–6A/U in series with a 1-$\mu\mu$f capacitor are as follows:

Terminals	Circuit	Value in volts (ac)
20 to 24 (ground).	Transmitter filaments	.025
21 to 24	Receiver plates (SEND)	3.5
22 to 24	Receiver filaments (STANDBY).	.005
23 to 24	Receiver filaments (SEND)	.005
32 to 24	Transmitter plates	4.0
33 to 24	Receiver plates (STANDBY).	.1

256. Dynamotor-Power Supply DY–88/GRC–9, Voltage Output Test

a. The voltage output measurements are made at POWER OUT receptacle J202. To measure the output voltages, proceed as follows:

(1) Connect the receiver-transmitter to the dynamotor power supply.

(2) Check the setting of the voltage selector switch control H206 (fig. 142) and DYN. FUSE F201 to see that they correspond with the voltage source available.

(3) Connect a 6-, 12-, or 24-volt battery to the input of the dynamotor power supply.

(4) With the transmitter tuned and loaded for CW–SEND operation, the voltage outputs as measured with Electronic Multimeter TS–505/U should be within the maximum and minimum values in the following chart.

Terminals on J202	Circuit	Rated output (volts dc)	Maximum output (volts dc)	Minimum output (volts dc)
20 to 24 (ground).	Transmitter filaments	6.5	6.8	6.2
21 to 24	Receiver plates (SEND)	120	140	105
22 to 24	Receiver filaments (STANDBY)	1.5	1.6	1.4
23 to 24	Receiver filaments (SEND)	1.5	1.6	1.4
32 to 24	Transmitter doubler and pa plates (key down).	580	630	530
33 to 24	Receiver plates (STANDBY)	120	140	105
34 to 24	Keying relay K101 (key down)	6.9	7.4	6.4

b. The maximum output voltage from the keying relay circuit (pins 34 to 24 on J202), with the receiver-transmitter in PHONE–SEND operation and with the microphone switch released, should not exceed 8 volts dc.

257. Dynamotor-Power Supply DY–88/GRC–9, Voltage Regulation Test

The voltage regulation of the transmitter plate supply circuit between no-load and normal-load conditions must not exceed 15 percent. To measure the percent regulation, proceed as follows:

a. Connect the receiver-transmitter to the dynamotor power supply.

b. Check the setting of the voltage selector switch control H206 (fig. 142) and DYN. FUSE F201 to see that they correspond with the voltage source available.

c. Connect a 6-, 12-, or 24-volt battery to the input of the dynamotor power supply.

d. With the transmitter tuned and loaded for CW–SEND operation, and the key closed, measure the transmitter plate supply voltage from pin 32 of POWER OUT receptacle J202 to ground; use Electronic Multimeter TS–505/U. This is the normal-load voltage which is designated E_2.

e. Repeat the procedure in *d* above with the key up. The voltage measured is the no-load voltage which is designated E_1.

f. Compute the percent regulation from the following formula:

$$\text{Percent regulation} = \frac{E_1 - E_2}{E_2} (100)$$

For example, if the normal-load voltage E_2 is 580 volts, and the no-load voltage E_1 is 630 volts, the percent regulation is:

$$\frac{630-580}{580} (100) = 8.6\%$$

g. If the percent regulation exceeds 15 percent, Dynamotor D201 is probably defective. Check for poor brush contact, worn brushes, or commutator segments that are heavily coated with oxide.

258. Dynamotor Power Supply DY–88/GRC–9, Ripple Voltage Test

With a 6-, 12-, or 24-volt battery connected to the input of the dynamotor power supply and a receiver-transmitter connected as a load, the maximum permissible ripple voltages as measured with Electronic Multimeter ME–6A/U in series with a 1-$\mu\mu$f capacitor are as follows:

Terminals on J202	Circuit	Ac ripple (volts)
20 to 24 (ground).	Transmitter filaments	.05
21 to 24	Receiver plates (SEND)	.1
22 to 24	Receiver filaments (STANDBY).	.005
23 to 24	Receiver filaments (SEND)	.005
32 to 24	Transmitter plates (V102 and V103).	4.0
33 to 24	Receiver plates (STANDBY).	.1
34 to 24	Keying relay K101	.3

259. Dynamotor-Power Supply DY–105/GRC–9X, Voltage Output Test

a. The voltage output measurements are made at POWER OUT receptacle J2. To measure the output voltages, proceed as follows:

(1) Connect the receiver-transmitter known to be good to the dynamotor power supply or load resistors as listed in the chart below.

(2) Connect a 24-volt battery to the input of the dynamotor power supply.

(3) With the transmitter tuned and loaded for CW–SEND operation, the voltage outputs as measured with Electronic Multimeter TS–505/U should be within the maximum and minimum values in the following chart:

FOR FULL-LOAD OPERATION

Terminals	Circuit	Rated output (volts dc)	Maximum output (volts dc)	Minimum output (volts dc)	Dummy load resistor if used (ohms)	Dummy load wattage rating	Current drain at full load (ma)
20 to 24 (ground).	Transmitter filaments	6.5	6.8	6.2	3¼	25	2,000
21 to 24	Receiver plates (SEND)	120	140	105	2,625	10	45
22 to 24	Receiver filaments (STANDBY).	1.5	1.6	1.4	3	2	500
23 to 24	Receiver filaments (SEND)	1.5	1.6	1.4	3	2	500
32 to 24	Transmitter plate (key down).	580	610	550	5,800	100	100
33 to 24	Receiver plates (STANDBY).	150	170	130			
34 to 24	Keying relay K101 (key down).	6.9	7.4	6.4	12	8	575

FOR STANDBY OPERATION

21 to 24	Receiver plates	120	140	105	5,900	8	25
22 to 24	Receiver filaments	1.5	1.6	1.4	3	2	500
23 to 24	Receiver filaments	1.5	1.6	1.4	3	2	500

b. The maximum output voltage from the keying relay circuit (terminals 34 to 24 on J2), with the receiver-transmitter in PHONE–SEND operation and with the microphone switch released, should not exceed 8 volts dc.

260. Dynamotor-Power Supply DY–105/GRC–9X, Voltage Regulation Test

The voltage regulation test for Dynamotor-Power Supply DY–105/GRC–9X is the same as the test for Dynamotor-Power Supply DY–88/GRC–9 (par. 257).

261. Dynamotor-Power Supply DY–105/GRC–9X, Ripple Voltage Test

With a 24-volt battery connected to the input of the dynamotor-power supply and a receiver-transmitter connected as a load or load resistors as listed in chart below, the maximum permissible ripple voltages as measured with Electronic Multimeter ME–6A/U in series with a 1-$\mu\mu$f capacitor are as follows:

Terminals on J2	Circuit	Ac ripple (volts)	Dummy load resistor, if used (ohms)	Dummy load wattage rating
20 to 24 (ground).	Transmitter filaments	.05	3¼	25
21 to 24	Receiver plates (SEND)	.1	2,625	10
22 to 24	Receiver filaments (STANDBY)	.005	3	2
23 to 24	Receiver filaments (SEND)	.005	3	2
32 to 24	Transmitter doubler and pa plates	4.0	5,800	100
33 to 24	Receiver plates (STANDBY)	.1		
34 to 24	Keying relay K101	.3	12	8

262. Generator GN–58–(*), Voltage Output Test

When the generator power supply is driven at approximately 60 rpm, the voltage outputs should be the same as those given in the VOLTAGE CHART on the main schematic diagram (fig. 170). Refer to paragraph 184 for disassembly of the generator power supply so that it may be checked under load.

263. Generator GN–58–(*), Voltage Regulation Tests

a. High-Voltage Regulation Test. The voltage regulation of the generator high-voltage winding between no-load and normal-load condition must not exceed 8 percent. To measure the percent regulation, proceed as follows:

(1) Connect the receiver-transmitter to the generator.

(2) Crank the generator at approximately 60 rpm.

(3) With the transmitter tuned and loaded for CW–SEND operation, and the key closed, measure the voltage from pin 32 of the generator output voltage receptacle to ground; use Electronic Multimeter TS–505/U. This is the normal-load voltage which is designated E2.

(4) Repeat the procedure in (3) above with the key up. The voltage measured is the no-load voltage which is designated E1. Compute the percent regulation from the formula in paragraph 257*f*.

b. Low-Voltage Regulation Test. The voltage regulation of the generator 6.3-volt winding between no-load and normal-load conditions must not exceed 12 percent. To measure the percent regulation, proceed as follows:

(1) Connect the receiver-transmitter to the generator.

(2) Set the transmitter for CW–SEND operation.

(3) Leave the headset disconnected from the PHONES jacks so that the receiver filament circuit is open.

(4) Crank the generator at approximately 60 rpm.

(5) With the key up, measure the voltage from pin 20 of the generator output receptacle to ground; use Electronic Multimeter TS–505/U. This is the

normal-load voltage and is designated E2.

(6) Repeat the procedure in (5) above with the OFF–SEND–STANDBY switch in the OFF position. The voltage measured is the no-load which is designated E1. Compute the percent regulation from the formula in paragraph 257*f*.

c. Corrective Measures. If the percent regulation is greater than the values specified in *a* through *b* above, check for poor brush contact, worn brushes, or commutator segments that are heavily coated with oxide.

264. Generator GN–58–(*), Ripple Voltage Test

With a receiver-transmitter connected to the generator as a load, and the generator cranked at approximately 60 rpm, the maximum permissible ripple voltages as measured with Electronic Multimeter ME–6A/U in series with a 1-$\mu\mu$f capacitor are as follows:

Terminals on generator output voltage receptacle	Circuit	Ac ripple voltage (volts)
20 to 24 (ground).	Transmitter filaments	.063
21 to 24	Receiver plates (SEND)	1.05
23 to 24	Receiver filaments (SEND)	.014
32 to 24	Transmitter doubler and pa plates.	4.25
34 to 24	Keying relay K101	.063

CHAPTER 7
SHIPMENT AND LIMITED STORAGE AND DEMOLITION TO PREVENT ENEMY USE

Section I. SHIPMENT AND LIMITED STORAGE

265. Disassembly

The following instructions are a general guide for preparing the radio set for transportation and storage.

Warning: Disconnect all power sources before disassembly.

a. Disconnect the cord from the power supply used and from the radio set.

b. Disconnect the cord from the battery power supply used and from the radio set.

c. Disconnect the microphone, key, and headset.

d. Disconnect the antenna lead from the binding posts on the transmitter panel.

e. Disassemble the antenna assembly.

f. Check the equipment against the table of components (par. 7).

266. Field Repackaging Data

a. Materials Required. The following chart lists the estimated amount of materials required to prepare the radio set for shipment:

Materials	Amount
Waterproof barrier	81 sq ft
Pressure-sensitive tape	22 ft
Single-faced, flexible, corrugated paper	100 sq ft
Double-faced, corrugated paper	45 sq ft
Gummed paper tape	30 ft
Flat steel strapping	38 ft
Wooden shipping boxes	3 ea

b. Box Size. The dimensions of the shipping boxes required for the radio set are given in the chart below.

Box No.	Inner dimensions			Board ft	Volume (cu ft)	Packed weight (lb)
	Height (in.)	Width (in.)	Depth (in.)			
1 of 3	16⅝	25	15½	19	3.7	79
2 of 3	12⅝	47¾	21	38	7.6	142
3 of 3	12	15½	15½	10	1.6	72
or						
3 of 3	14⅞	26⅝	19½	20	4.6	138

267. Repackaging Radio Set

a. Technical Manuals. Wrap the manuals in waterproof-barrier material. Seal all the seams and folds with pressure-sensitive tape.

b. Receiver Transmitter, Panel Cover, Cord, and Bag CW–140/GRC–9. Place the panel cover on the receiver-transmitter and secure all fastenings. Wind the cords into a coil proportionate dimensions and secure them to the receiver-transmitter with suitable ties. Place and secure the receiver-transmitter within the bag. Close and secure all fastenings. Cushion the receiver-transmitter in the bag with pads fabricated of double-faced, corrugated paper. Secure the cushioning with gummed paper tape. Inclose the cushioned receiver transmitter within a wrap of single-faced, flexible, corrugated paper and seal with gummed paper tape.

c. Generator GN–58–(*) and Spare Brushes in Bag BG–175. Place the spare brushes in a

cloth drawstring bag and secure the closed bag inside the cover of the generator case. Close the generator case and secure the fastenings. Place the smooth side of the generator against the bottom of Bag BG–175 and secure the fastenings. Cushion each bag on all surfaces with pads, fabricated of double-faced corrugated paper used to absorb the shock of impact normally encountered in handling and transit. Secure the cushioning with gummed tape. Inclose each cushioned bag with contents within a wrap of single-faced flexible corrugated paper and secure with gummed paper tape.

d. Dynamotor Power Supply and Bag of Hardware or Vibrator Power Supply and Bag of Hardware. For dynamotor power supply only, place spare fuses within the designated compartments of the dynamotor power supply. Inclose spare brushes within a close fitting bag fabricated of waterproof barrier material. Seal all seams with pressure-sensitive tape. Place the packaged spare brushes within the designated compartment of the dynamotor power supply. Install spare tubes in the sockets provided. Secure the bag of hardware to the dynamotor power supply. For vibrator power supply only, install spare vibrator and tubes in sockets provided. Secure the bag of hardware to the vibrator power supply. For either power supply, wind cables into coils of proportionate dimensions and tie each coil in three places with pressure-sensitive tape, securing the connectors to the coils with the ties. Cushion the dynamotor power supply or the vibrator power supply on all surfaces with pads fabricated of double-faced corrugated paper. Secure the cushioning with gummed paper tape. Inclose the dynamotor power supply or the vibrator power supply within a wrap of single-faced flexible, corrugated paper. Secure with gummed paper tape.

e. Mast Base MP–65–B. Cushion both ends of the mast base with pads fabricated of double-faced corrugated paper in such a manner as to assure at least ½-inch clearance on all sides of the ceramic insulator and further cushion by wrapping in single-faced flexible, corrugated paper to prevent damage in transit. Secure the cushioning with gummed paper tape.

f. Mounting MT–350/GRC–9 and Bag of Hardware. Secure the bag of hardware to the mounting. Cushion the mounting by wrapping with single-faced flexible, corrugated paper. Secure the cushioning with gummed paper tape.

g. Roll BG–174 and Contents (fig. 6). Wind Cord CD–1086 into a coil of proportionate dimensions and tie in three places with pressure-sensitive tape; secure the connectors to the coil with the ties. Place each item within the designated compartments of the roll. Close the roll and secure all fastenings. Inclose the roll within a wrap of single-faced corrugated paper and secure with gummed paper tape.

h. Key J–45. Cushion the key by wrapping it in single-faced flexible, corrugated paper. Secure the cushioning with gummed paper tape.

i. Antenna AT–101/GRC–9 and Antenna AT–102/GRC–9. Wind each antenna on reels provided. Cushion each insulator by wrapping it in single-faced flexible, corrugated paper. Secure the cushioning and the ends to the reels with suitable ties.

j. Wire W–128, Guy–12, Guy GY–42, Halyard M–378, Halyard M–379, Counterpoise CP–13. Wind each item into a coil of proportionate dimensions and tie at three places with pressure-sensitive tape; secure the ends with the ties.

k. Bracket FT–515. No packaging required.

l. Box BX–53 and Contents (fig. 7). Place items within the box; close the box cover and secure the fastenings.

m. Loudspeaker. Wind the cord attached to the loudspeaker into a coil of proportionate dimensions and secure it to the loudspeaker with pressure-sensitive tape.

n. Stowage Within Bag BG–172. Stow the items packaged as specified in *h* through *m* above within the designated compartments of the bag. Fill all remaining voids with single-faced flexible, corrugated paper to prevent movement. Close the bag and secure the fastenings. Cushion the bag on all surfaces with pads fabricated of double-faced corrugated paper. Secure the cushioning with gummed paper tape. Inclose the cushioned bag within a wrap of single-faced flexible, corrugated paper and secure the wrap with gummed paper tape.

268. Field Repacking, Strapping, and Marking

a. Repacking.

(1) Place one each packaged Bag CW–

140/GRC–9 with contents within a nailed wooden box lined with a sealed waterproof case liner and proceed as follows:

(*a*) Secure the technical literature between the contents and lid of the box.

(*b*) Fill all voids with pads fabricated of single-faced flexible, corrugated paper to prevent movement.

(*c*) Seal the waterproof liner with pressure-sensitive tape.

(*d*) Nail the lid to the wooden box.

(2) Place one each packaged Bag–172 with contents, one each packaged Bag BG–175 with contents, one each packaged Roll BG–174 with contents, one each packaged Mast Base MP–65–B, and one each packaged Mounting MT–350/GRC–9 within a nailed wooden box lined with a sealed waterproof case liner and proceed as follows:

(*a*) Fill all voids with pads fabricated of single-faced flexible, corrugated paper to prevent movement.

(*b*) Seal the waterproof liner with pressure-sensitive tape.

(*c*) Nail the lid to the wooden box.

(3) Place one each packaged dynamotor power supply or one each packaged vibrator power supply with contents within a nailed wooden box lined with a sealed waterproof case liner and proceed as follows:

(*a*) Fill all voids with pads fabricated of single-faced, flexible, corrugated paper to prevent movement.

(*b*) Seal the waterproof liner with pressure-sensitive tape.

(*c*) Nail the lid to the wooden box.

b. Strapping. Strap the three shipping boxes.

c. Marking. Mark the three shipping containers in accordance with the requirements of SR 55–720–1.

Section II. DEMOLITION OF MATERIAL TO PREVENT ENEMY USE

269. General

The demolition procedures outlined in paragraph 270 will be used to prevent the enemy from using or salvaging this equipment. Demolition of the equipment will be accompanied only upon order of the commander.

270. Methods of Destruction

Use any or all of the following methods to destroy the equipment.

a. Smash. Smash the crystals, controls, tubes, coils, switches, transformer, and headsets; use sledges, handaxes, pickaxes, hammers, crowbars, or heavy tools.

b. Cut. Cut cords, headsets, and wiring; use axes, handaxes, or machetes.

c. Burn. Burn cords, resistors, capacitors, coils, wiring, technical manuals; use gasoline, kerosene, oil, flame throwers, or incendiary grenades.

d. Bend. Bend panels, cabinet, and chassis.

e. Explosives. If explosives are necessary, use firearms, grenades, or TNT.

f. Disposal. Bury or scatter the destroyed parts in slit trenches, fox holes, or other holes, or throw them into streams.

RESISTOR COLOR CODE MARKING
(MIL-STD RESISTORS)

AXIAL-LEAD RESISTORS (INSULATED)

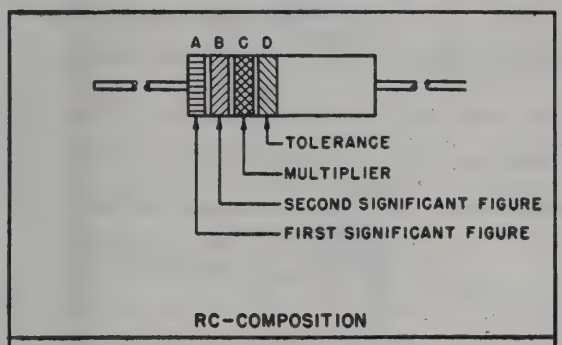

RC-COMPOSITION

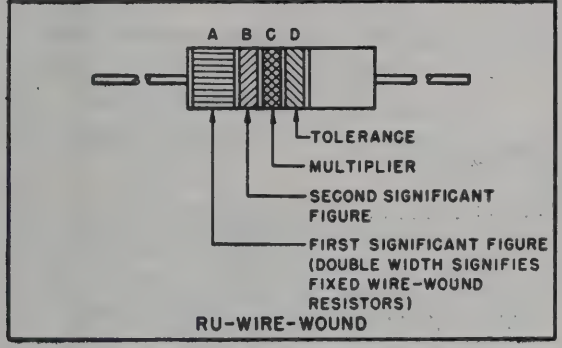

RU-WIRE-WOUND

RADIAL-LEAD RESISTORS (UNINSULATED)

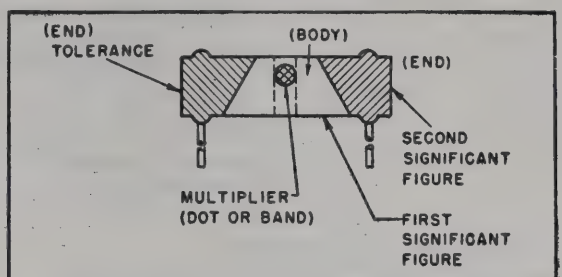

RZ-COMPOSITION

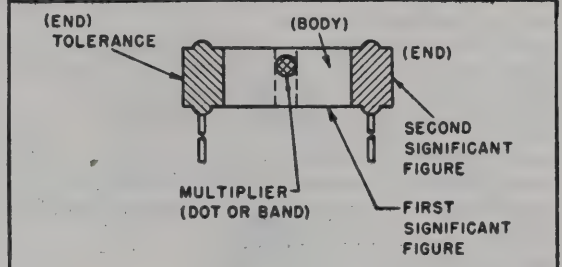

RZ-COMPOSITION

RESISTOR COLOR CODE

BAND A OR BODY*		BAND B OR END*		BAND C OR DOT OR BAND*		BAND D OR END*	
COLOR	FIRST SIGNIFICANT FIGURE	COLOR	SECOND SIGNIFICANT FIGURE	COLOR	MULTIPLIER	COLOR	RESISTANCE TOLERANCE (PERCENT)
BLACK	0	BLACK	0	BLACK	1	BODY	±20
BROWN	1	BROWN	1	BROWN	10	SILVER	±10
RED	2	RED	2	RED	100	GOLD	±5
ORANGE	3	ORANGE	3	ORANGE	1,000		
YELLOW	4	YELLOW	4	YELLOW	10,000		
GREEN	5	GREEN	5	GREEN	100,000		
BLUE	6	BLUE	6	BLUE	1,000,000		
PURPLE (VIOLET)	7	PURPLE (VIOLET)	7				
GRAY	8	GRAY	8	GOLD	0.1		
WHITE	9	WHITE	9	SILVER	0.01		

*FOR WIRE-WOUND-TYPE RESISTORS, BAND A SHALL BE DOUBLE-WIDTH. WHEN BODY COLOR IS THE SAME AS THE DOT (OR BAND) OR END COLOR, THE COLORS ARE DIFFERENTIATED BY SHADE, GLOSS, OR OTHER MEANS.

EXAMPLES (BAND MARKING):
10 OHMS ±20 PERCENT: BROWN BAND A; BLACK BAND B; BLACK BAND C; NO BAND D.
4.7 OHMS ±5 PERCENT: YELLOW BAND A; PURPLE BAND B; GOLD BAND C; GOLD BAND D.

EXAMPLES (BODY MARKING):
10 OHMS ±20 PERCENT: BROWN BODY; BLACK END; BLACK DOT OR BAND; BODY COLOR ON TOLERANCE END.
3,000 OHMS ±10 PERCENT: ORANGE BODY; BLACK END; RED DOT OR BAND; SILVER END.

STD-R1

Figure 165. Resistor color codes.

CAPACITOR COLOR CODE MARKING
(MIL-STD CAPACITORS)

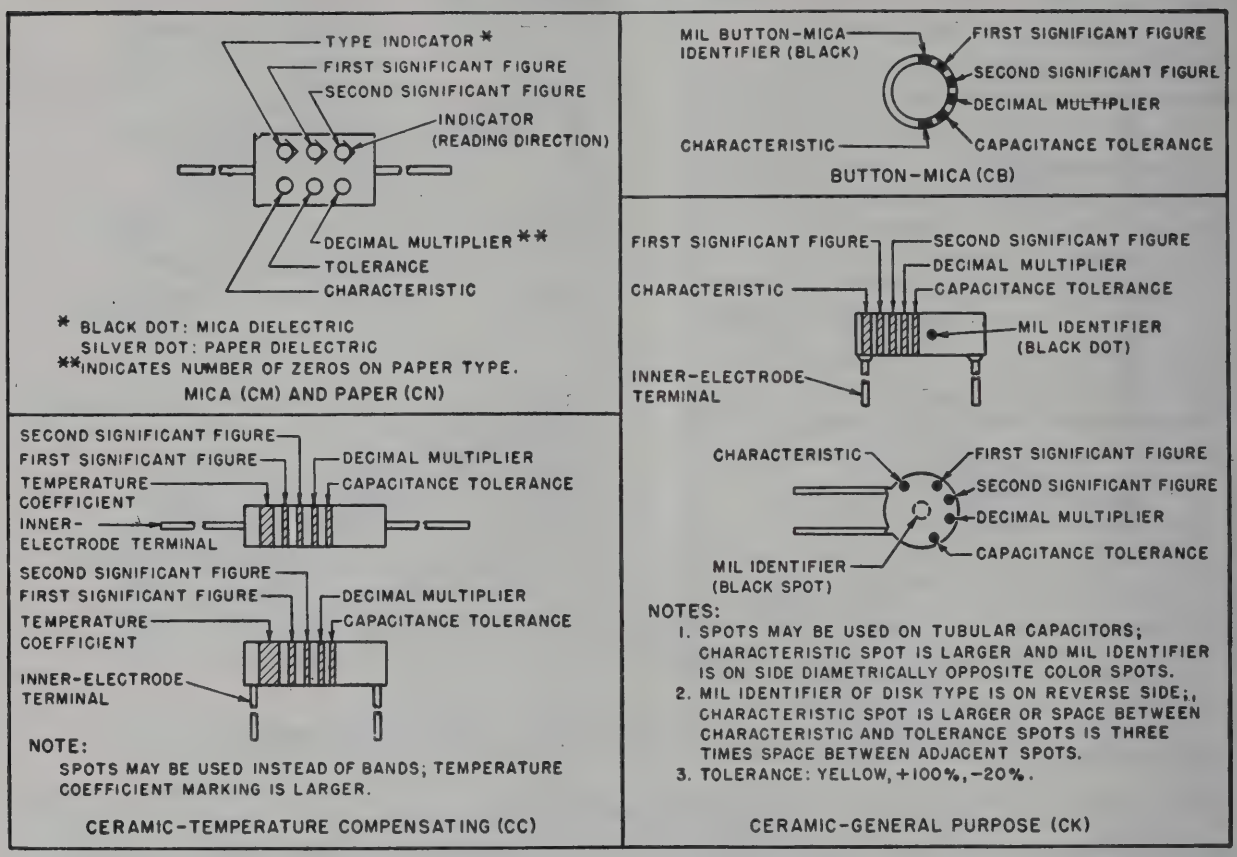

CAPACITOR COLOR CODE

COLOR	SIG FIG.	MULTIPLIER		CHARACTERISTIC[1]				TOLERANCE[2]					TEMPERATURE COEFFICIENT (UUF/UF/°C)
		DECIMAL	NUMBER OF ZEROS	CM	CN	CB	CK	CM	CN	CB	CC		
											OVER 10UUF	10UUF OR LESS	CC
BLACK	0	1	NONE		A			20	20	20	20	2	ZERO
BROWN	1	10	1	B	E	B	W				1		-30
RED	2	100	2	C	H		X	2		2	2		-80
ORANGE	3	1,000	3	D	J	D			30				-150
YELLOW	4	10,000	4	E	P								-220
GREEN	5		5	F	R						5	0.5	-330
BLUE	6		6		S								-470
PURPLE (VIOLET)	7		7		T	W							-750
GRAY	8		8			X						0.25	+30
WHITE	9		9								10	1	-330(±500)[3]
GOLD		0.1						5		5			+100
SILVER		0.01						10	10	10			

1. LETTERS ARE IN TYPE DESIGNATIONS GIVEN IN MIL-C SPECIFICATIONS.
2. IN PERCENT, EXCEPT IN UUF FOR CC-TYPE CAPACITORS OF 10 UUF OR LESS.
3. INTENDED FOR USE IN CIRCUITS NOT REQUIRING COMPENSATION.

STD-CI

Figure 166. Capacitor color codes.

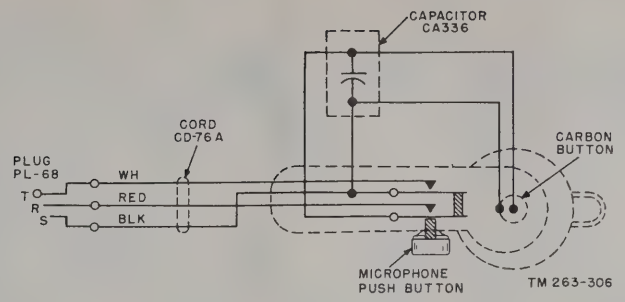

Figure 167. Internal wiring diagram of Microphone T–17.

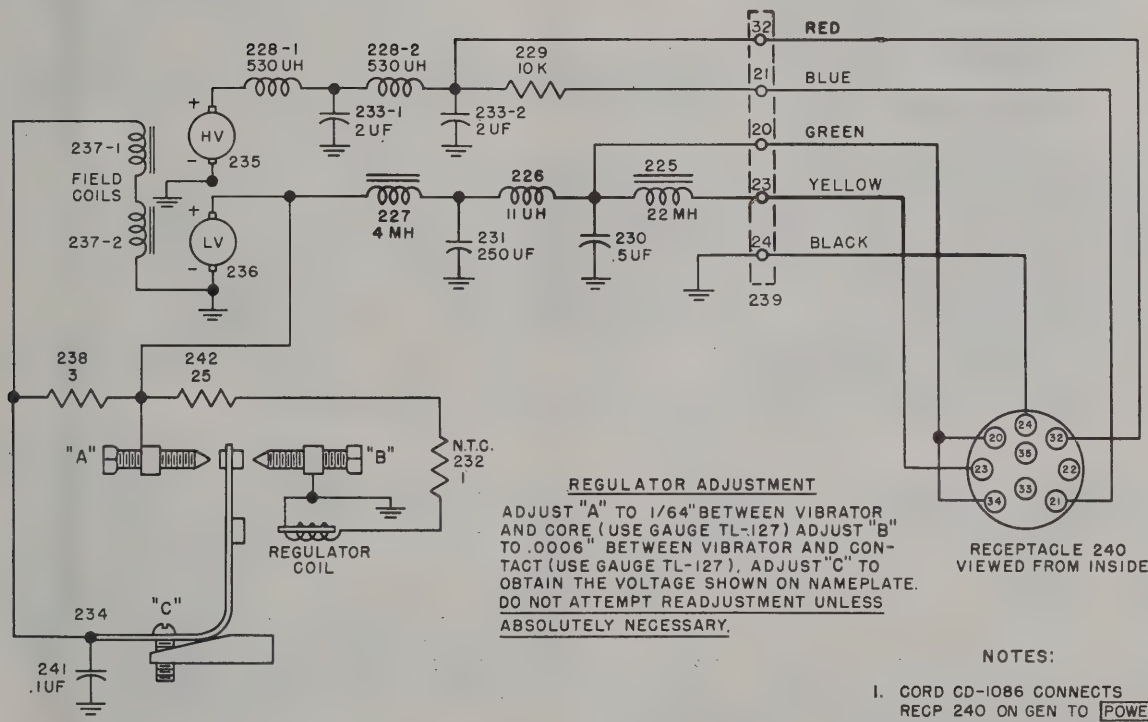

VOLTAGE CHART		
TERMINAL	VOLTAGE	CIRCUIT
20	+6.3	XMTR FILS AND REL K102B
21	+105	RCVR AND XMTR
22	—	———
23	+1.4	RCVR FIL
24	0	GRD (A- AND B-)
32	+425	XMTR
33	—	———
34	+6.3	KEYING REL K101
35	—	———

VOLTAGE CHART MEASUREMENTS MADE WITH NO LOAD.

RECEPTACLE 240
VIEWED FROM OUTSIDE

TM 263-86

Figure 168. Generator GN–58, schematic diagram.

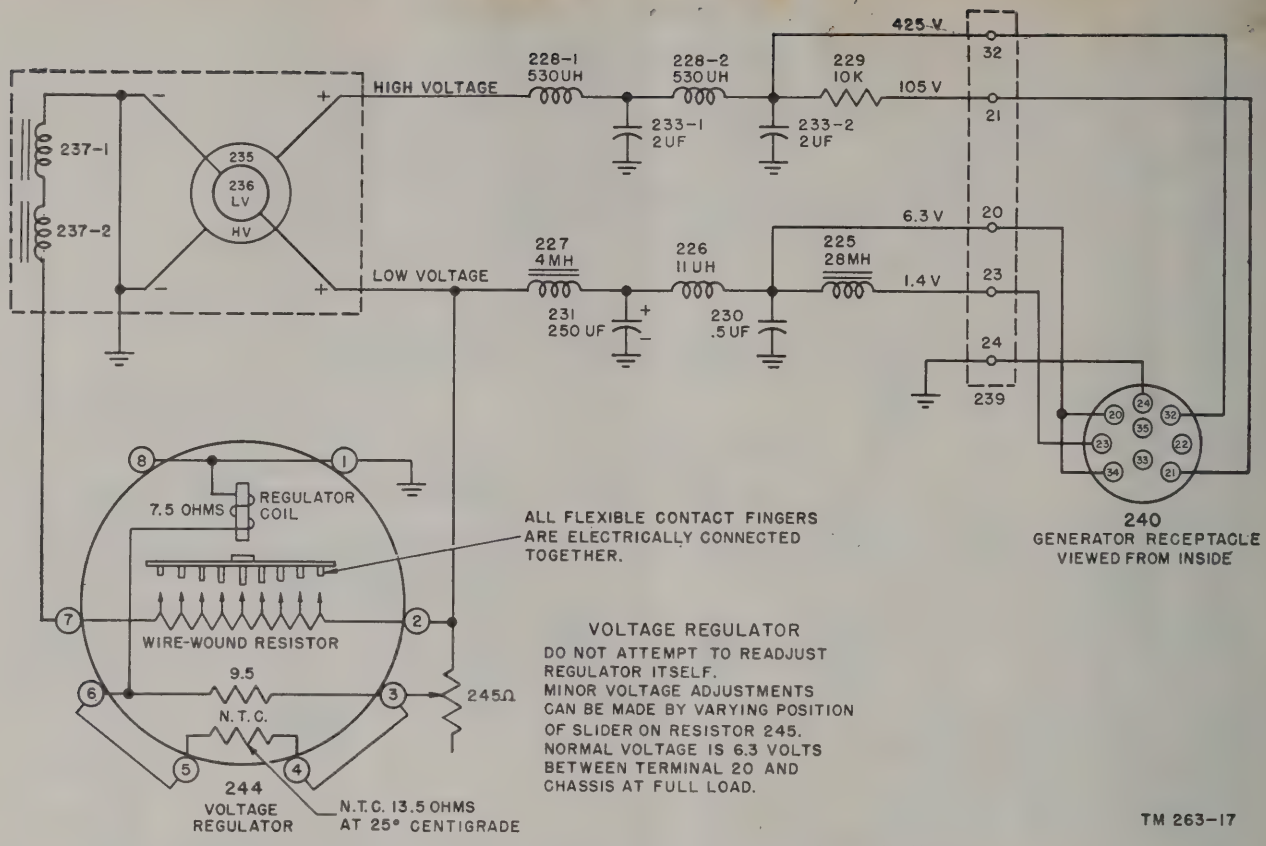

Figure 169. Generator GN–58–A (early models), schematic diagram.

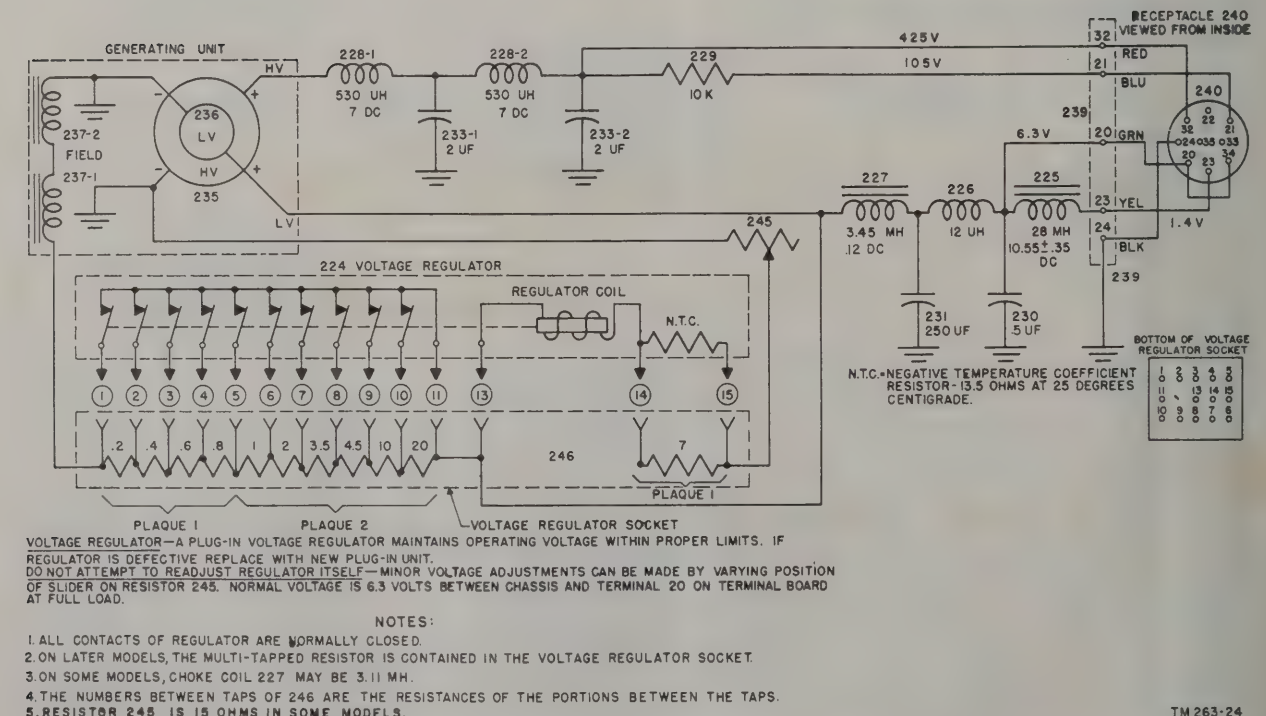

VOLTAGE REGULATOR—A PLUG-IN VOLTAGE REGULATOR MAINTAINS OPERATING VOLTAGE WITHIN PROPER LIMITS. IF REGULATOR IS DEFECTIVE REPLACE WITH NEW PLUG-IN UNIT.
DO NOT ATTEMPT TO READJUST REGULATOR ITSELF—MINOR VOLTAGE ADJUSTMENTS CAN BE MADE BY VARYING POSITION OF SLIDER ON RESISTOR 245. NORMAL VOLTAGE IS 6.3 VOLTS BETWEEN CHASSIS AND TERMINAL 20 ON TERMINAL BOARD AT FULL LOAD.

NOTES:

1. ALL CONTACTS OF REGULATOR ARE NORMALLY CLOSED.
2. ON LATER MODELS, THE MULTI-TAPPED RESISTOR IS CONTAINED IN THE VOLTAGE REGULATOR SOCKET.
3. ON SOME MODELS, CHOKE COIL 227 MAY BE 3.11 MH.
4. THE NUMBERS BETWEEN TAPS OF 246 ARE THE RESISTANCES OF THE PORTIONS BETWEEN THE TAPS.
5. RESISTOR 245 IS 15 OHMS IN SOME MODELS.

TM 263-24

Figure 170. Generator GN–58–A (late models), schematic diagram

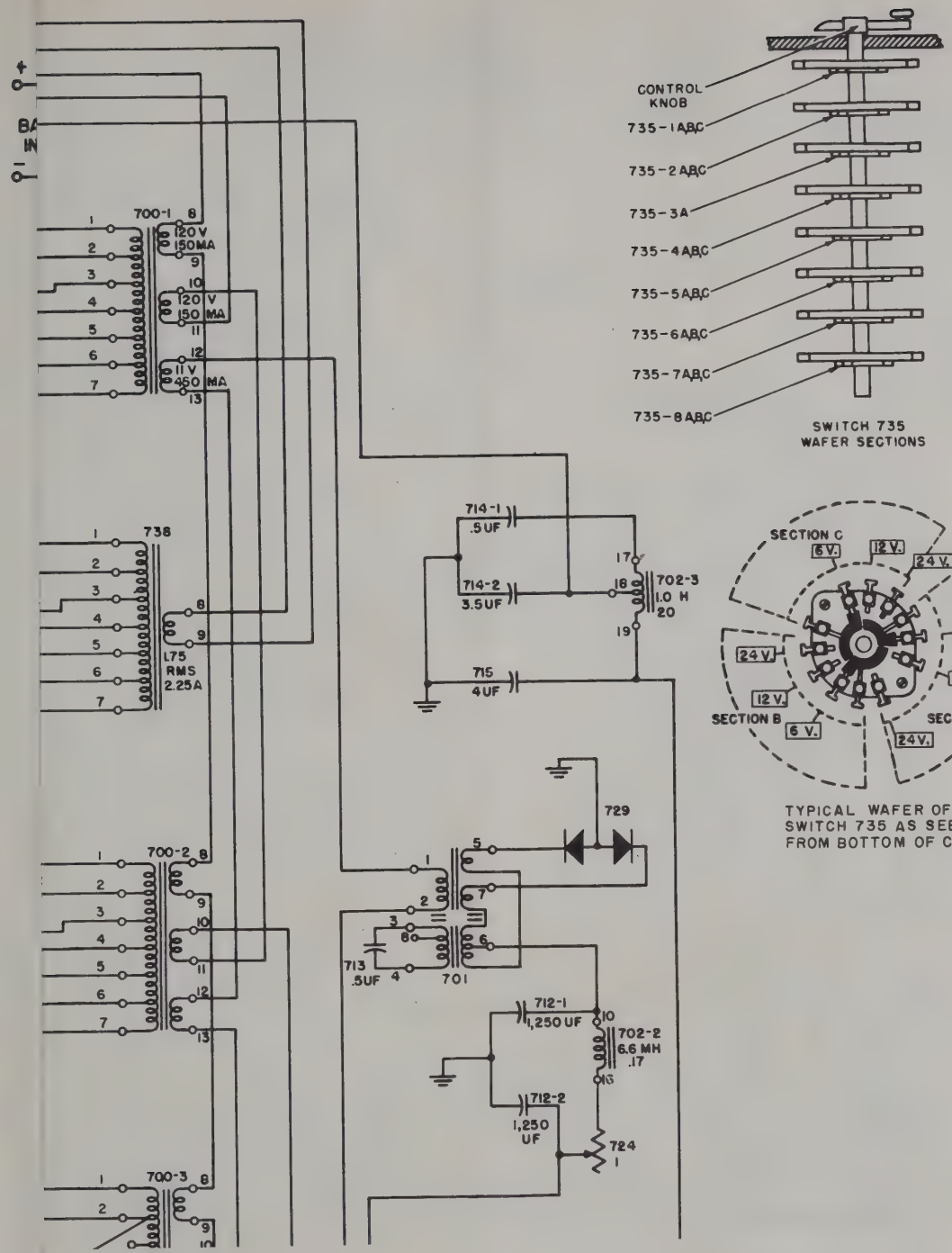

SWITCH 735
WAFER SECTIONS

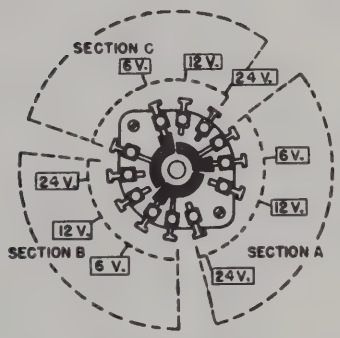

TYPICAL WAFER OF
SWITCH 735 AS SEEN
FROM BOTTOM OF CHASSIS

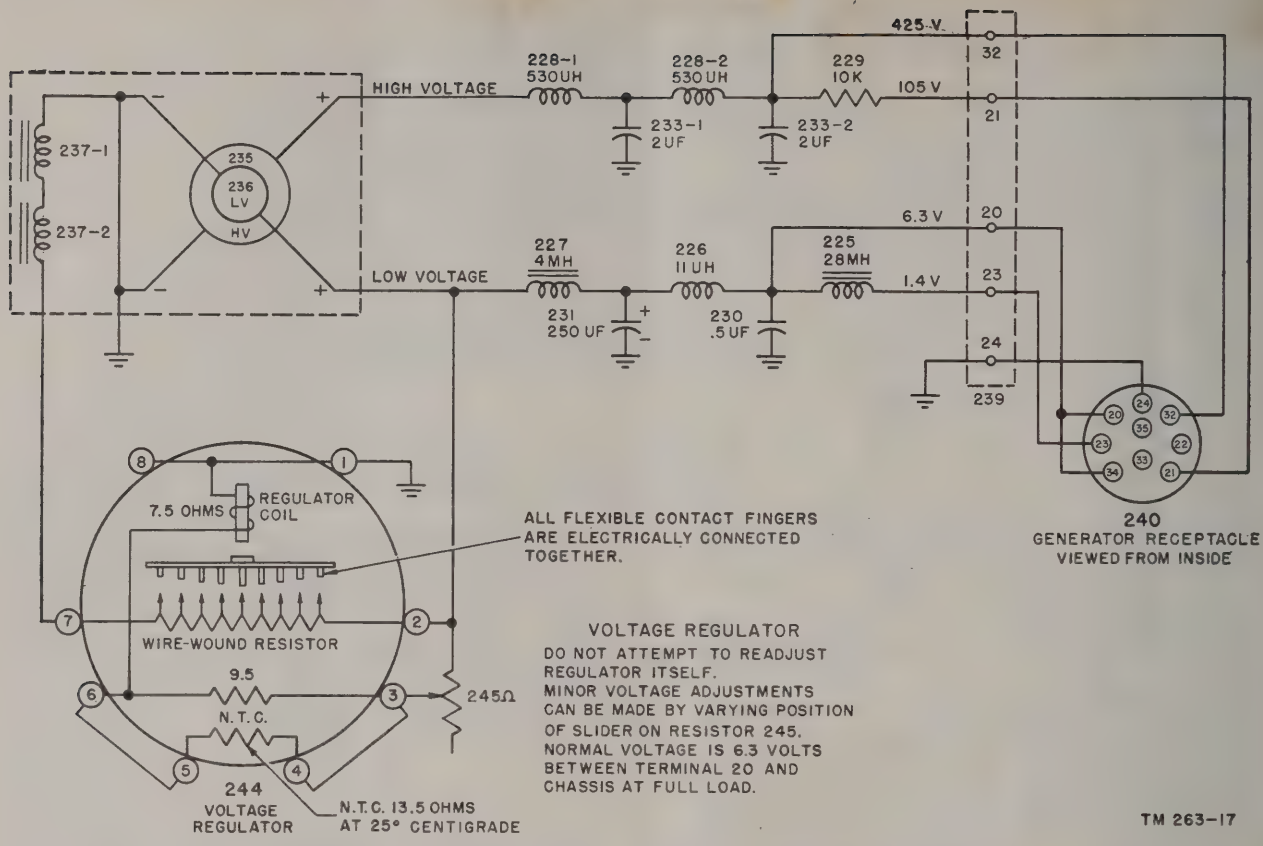

Figure 169. Generator GN–58–A (early models), schematic diagram.

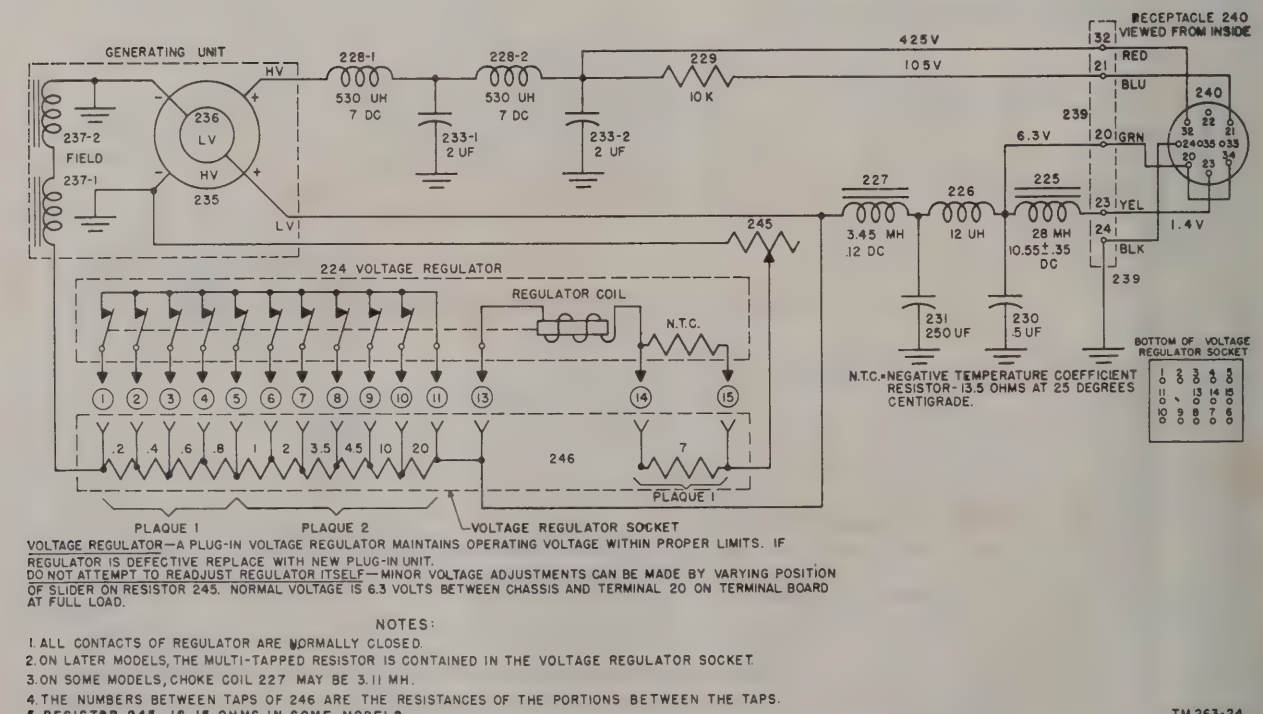

VOLTAGE REGULATOR—A PLUG-IN VOLTAGE REGULATOR MAINTAINS OPERATING VOLTAGE WITHIN PROPER LIMITS. IF REGULATOR IS DEFECTIVE REPLACE WITH NEW PLUG-IN UNIT.
DO NOT ATTEMPT TO READJUST REGULATOR ITSELF—MINOR VOLTAGE ADJUSTMENTS CAN BE MADE BY VARYING POSITION OF SLIDER ON RESISTOR 245. NORMAL VOLTAGE IS 6.3 VOLTS BETWEEN CHASSIS AND TERMINAL 20 ON TERMINAL BOARD AT FULL LOAD.

NOTES:

1. ALL CONTACTS OF REGULATOR ARE NORMALLY CLOSED.
2. ON LATER MODELS, THE MULTI-TAPPED RESISTOR IS CONTAINED IN THE VOLTAGE REGULATOR SOCKET.
3. ON SOME MODELS, CHOKE COIL 227 MAY BE 3.11 MH.
4. THE NUMBERS BETWEEN TAPS OF 246 ARE THE RESISTANCES OF THE PORTIONS BETWEEN THE TAPS.
5. RESISTOR 245 IS 15 OHMS IN SOME MODELS.

TM 263-24

Figure 170. Generator GN–58–A (late models), schematic diagram

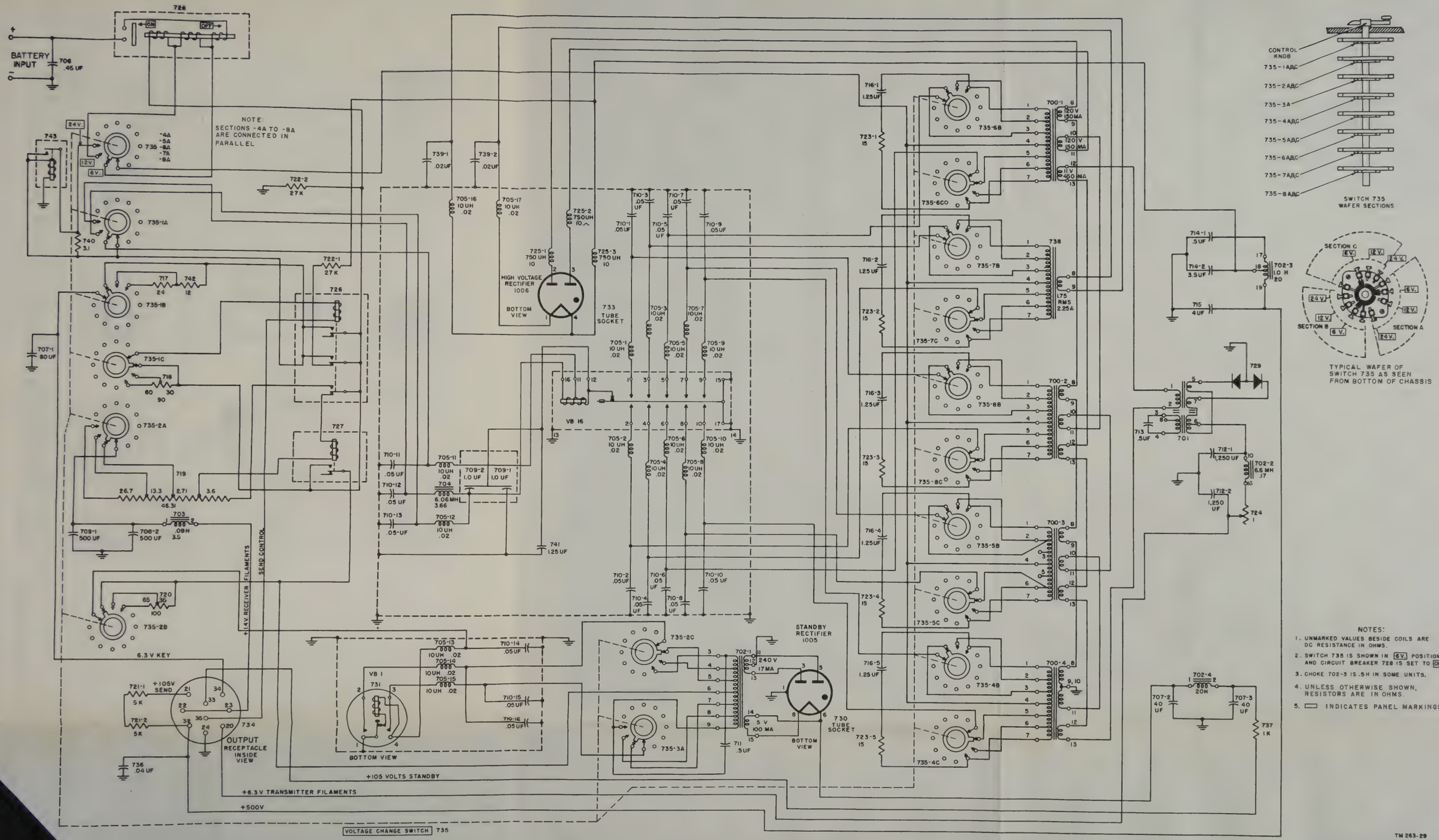

Figure 171. Vibrator Power Supply PE-237 (early model), schematic diagram.

405863 O - 56 (Face p. 246) No. 1

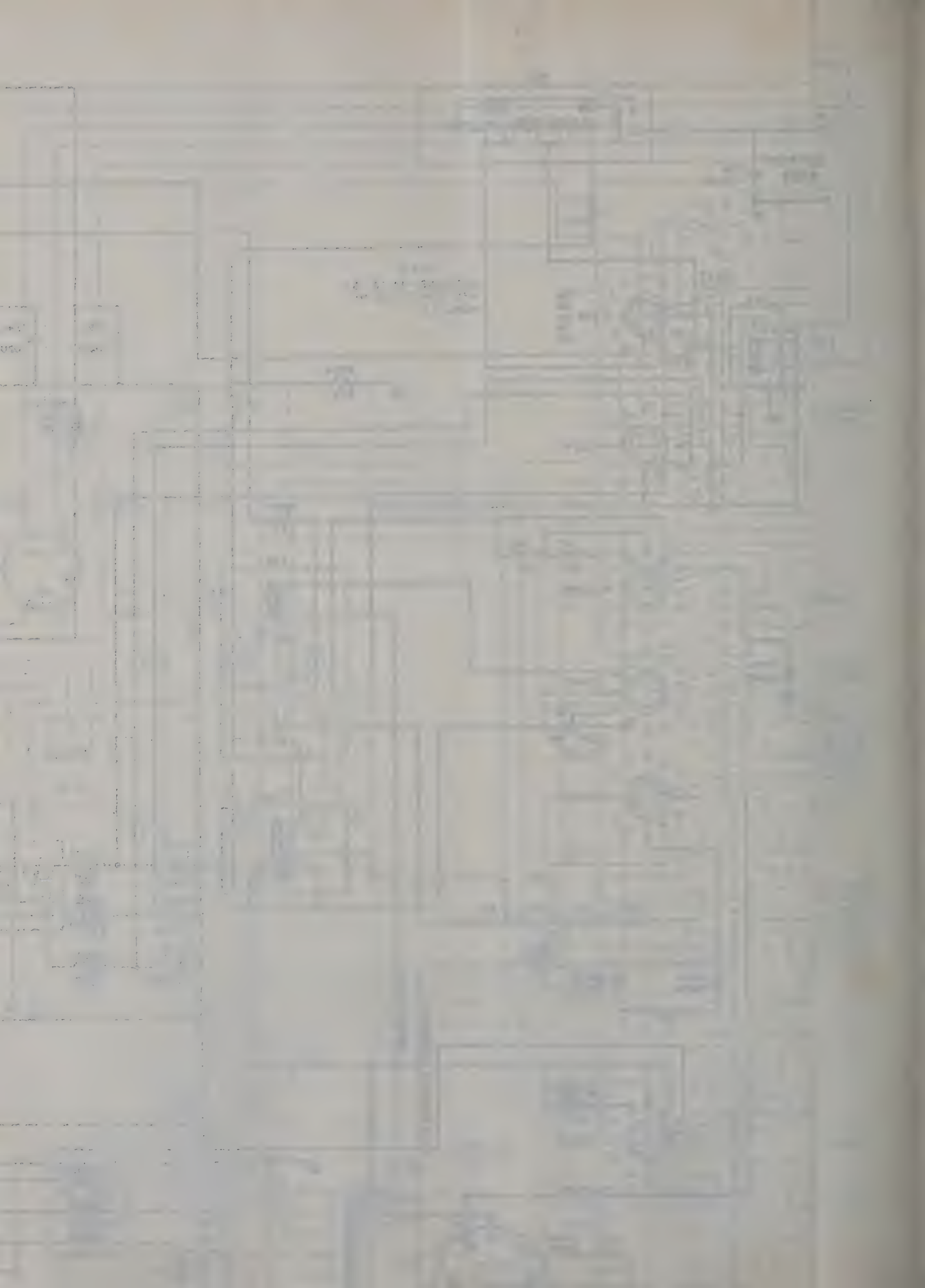

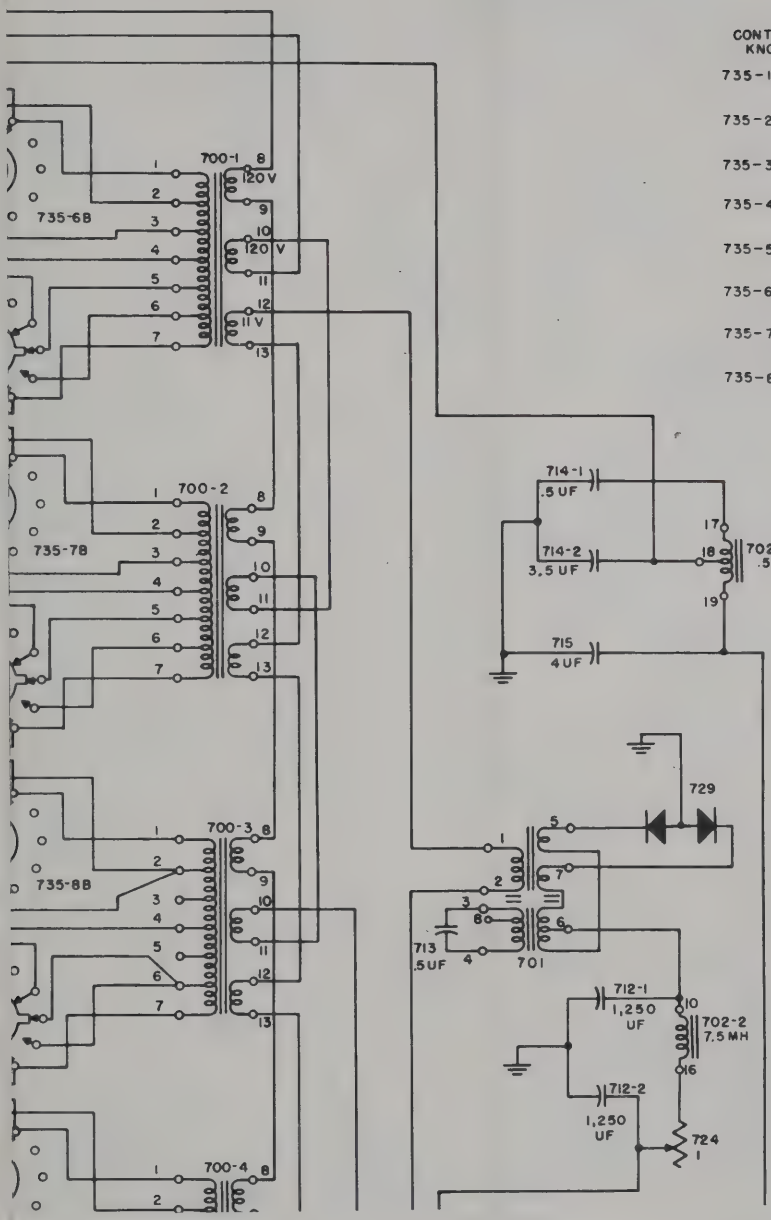

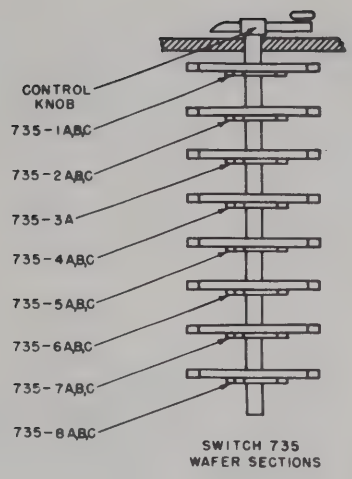

SWITCH 735
WAFER SECTIONS

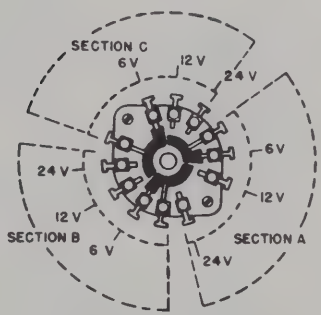

TYPICAL WAFER OF
SWITCH 735 AS SEEN
FROM BOTTOM OF CHASSIS

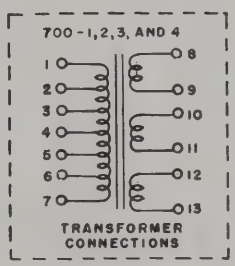

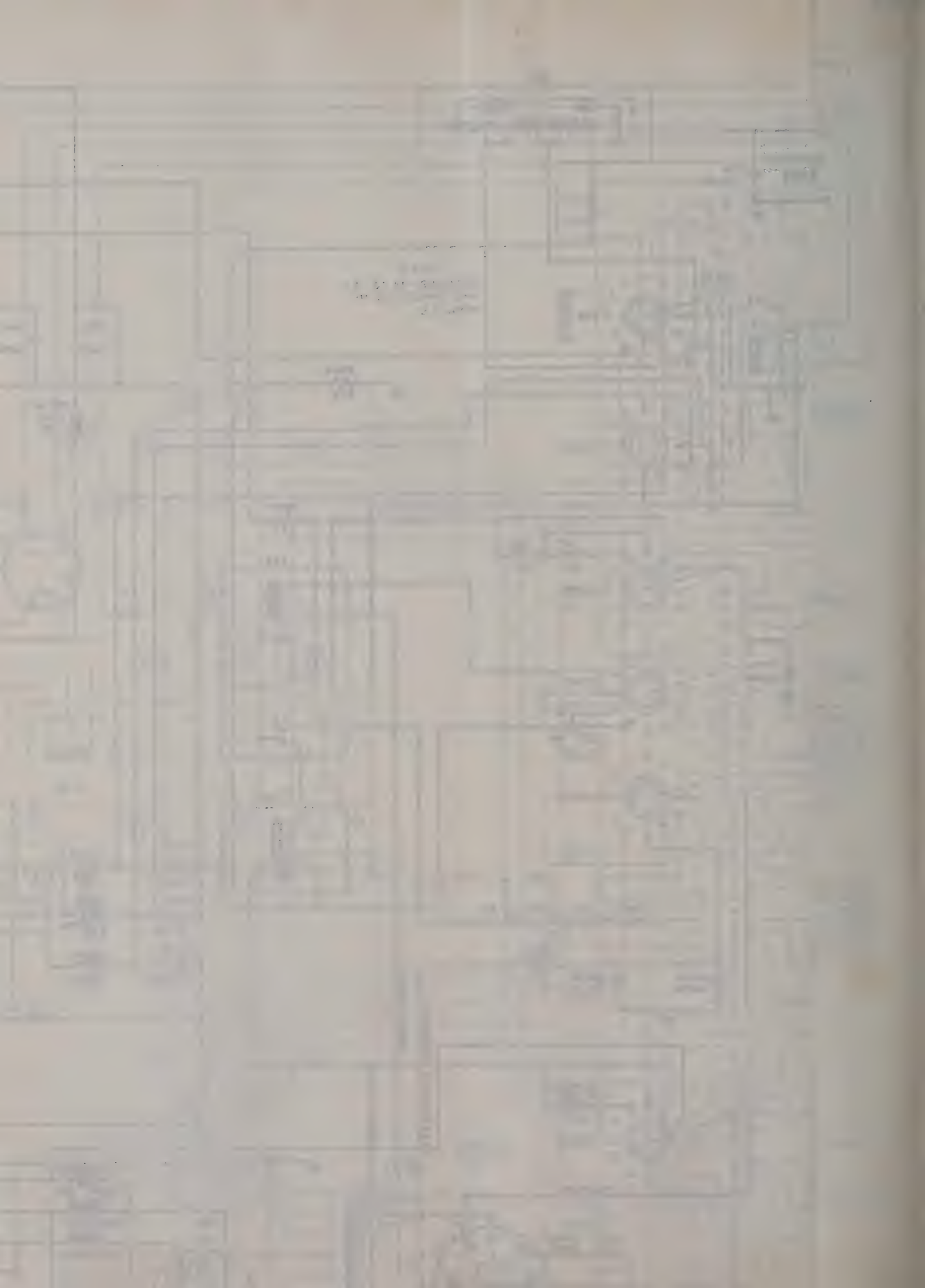

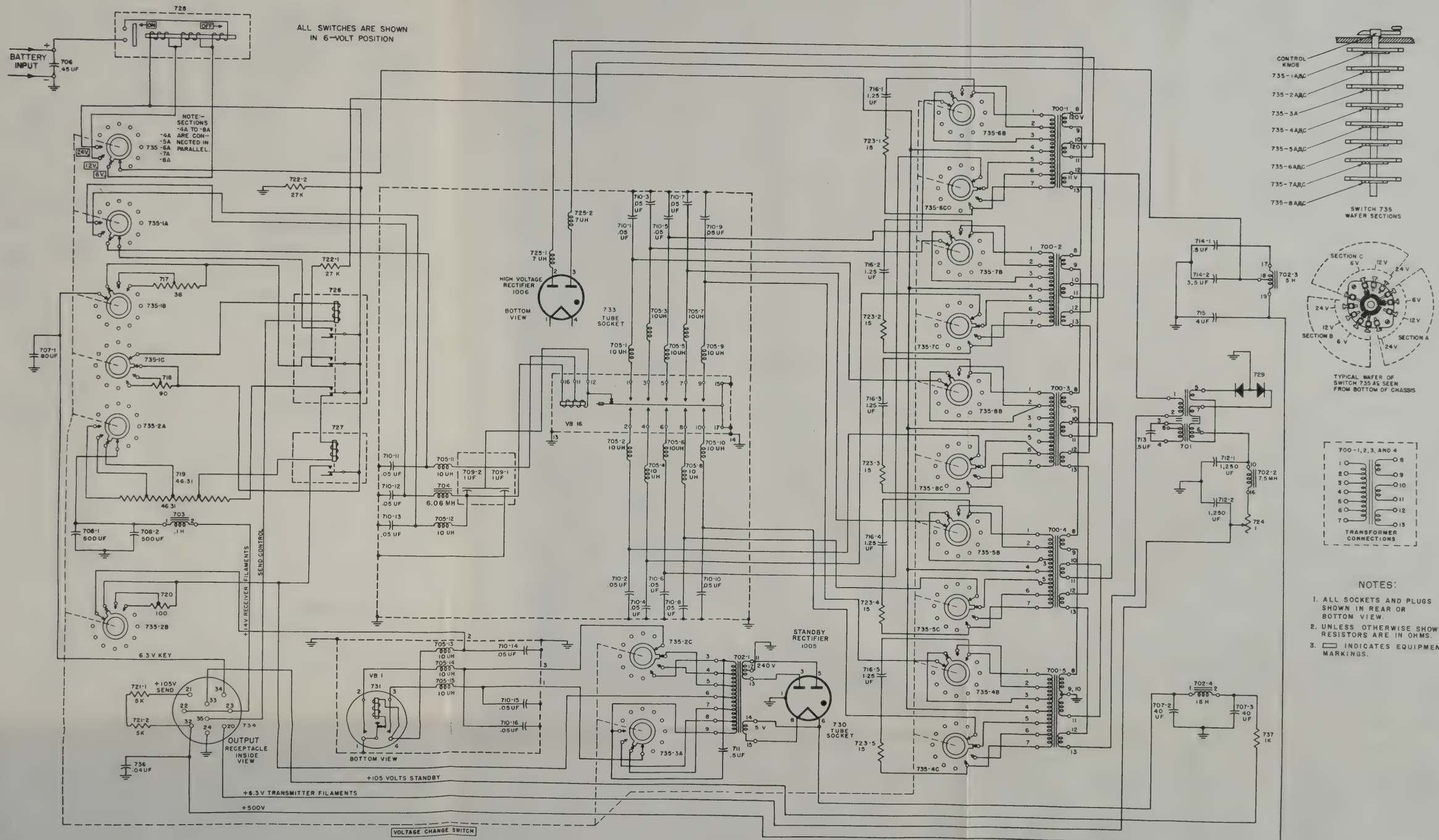

Figure 172. Vibrator Power Supply PE–237 (late models), schematic diagram.

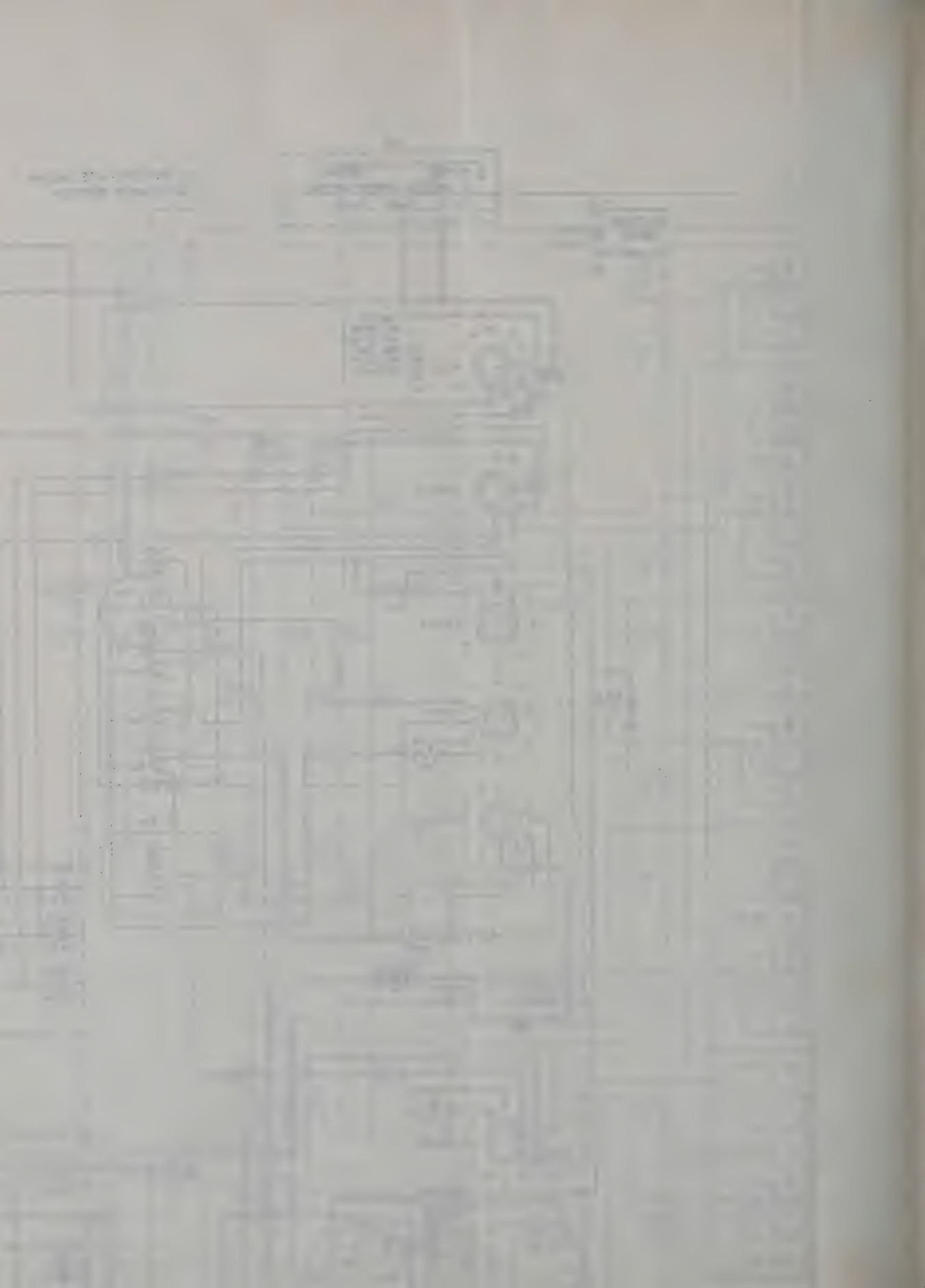

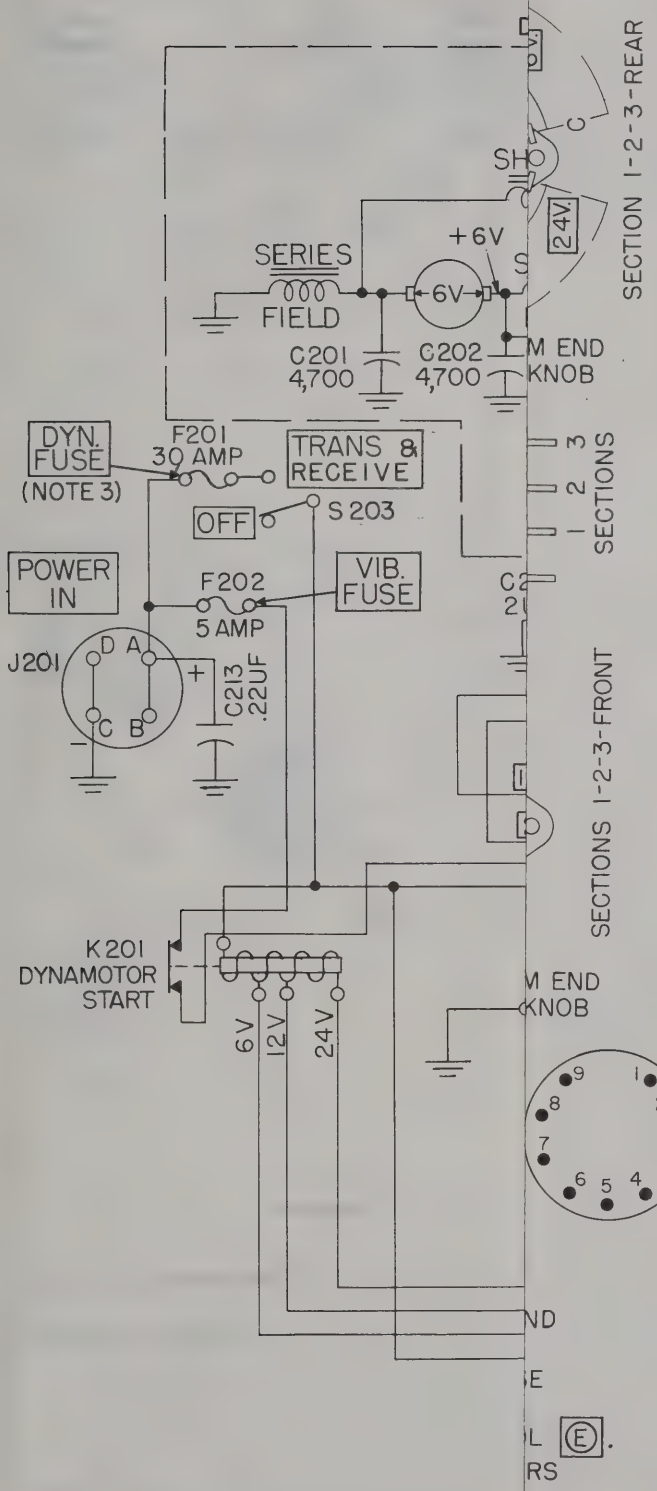

POWER OUTPUT RECEPTACLE J202			
PIN	CONNECTS TO	PIN	VOLTS
20	XMTR FIL SUPPLY	54	+6.3
21	105 V SEND	57	+105
22	RCVR FIL	56	+1.4
23	RCVR FIL	46	+1.4
24	GROUND	53	0
32	XMTR PLATE SUPPLY	47	+580
33	RCVR PLATE SUPPLY	58	+105
34	KEYING RELAY SUPPLY	45	+6.3
35	SEND CONTROL	55	0

POWER INPUT RECEPTACLE J201		
PIN	CONNECTS TO	VOLTS
A-B	BATTERY CABLE	6, 12, OR 24 V
C-D	GROUND	0

FUSES		
VOLTS	AMP	
	DYN. F201	VIB. F202
6	30	5
12	20	5
24	10	5

TM 263-406

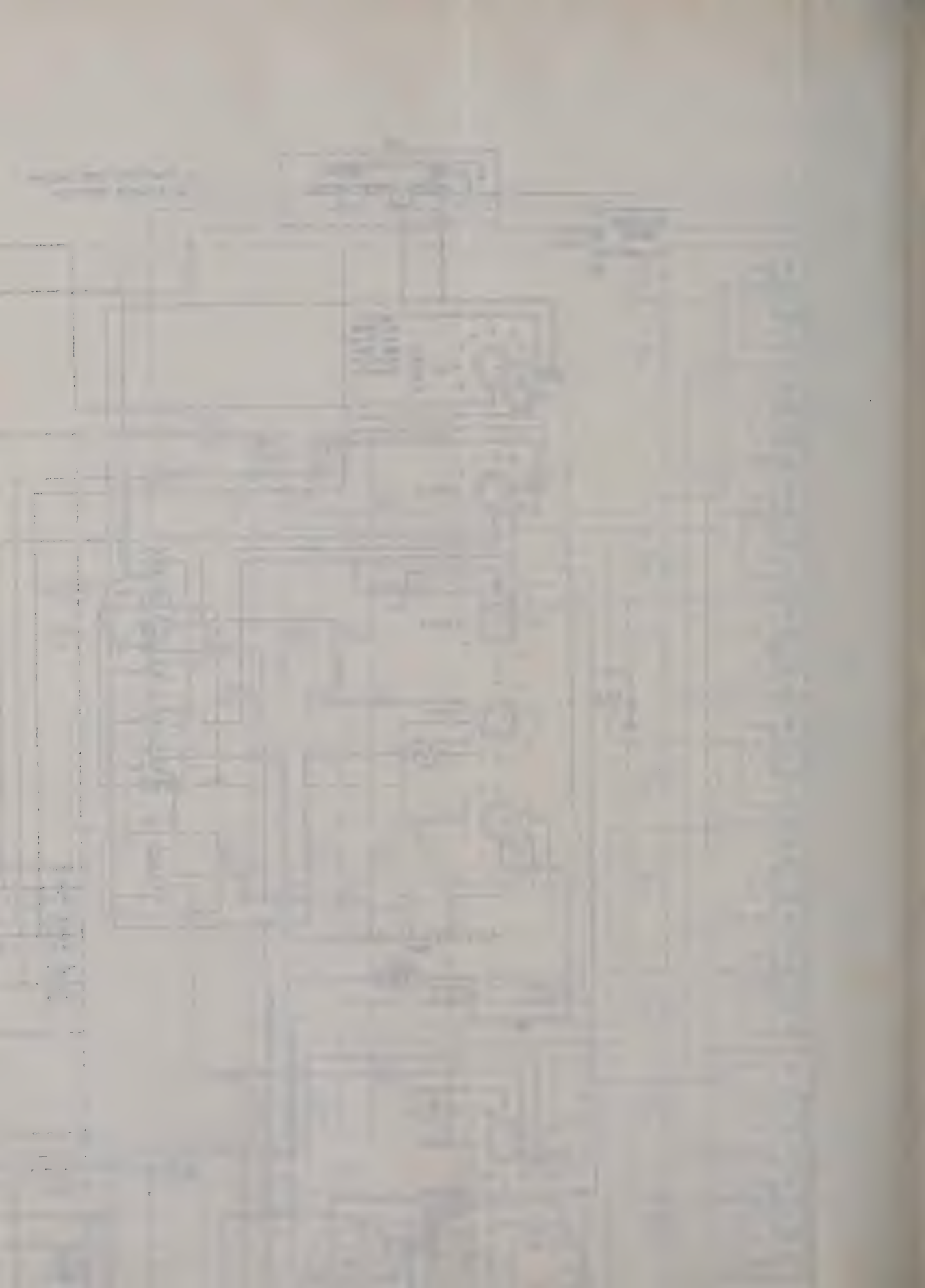

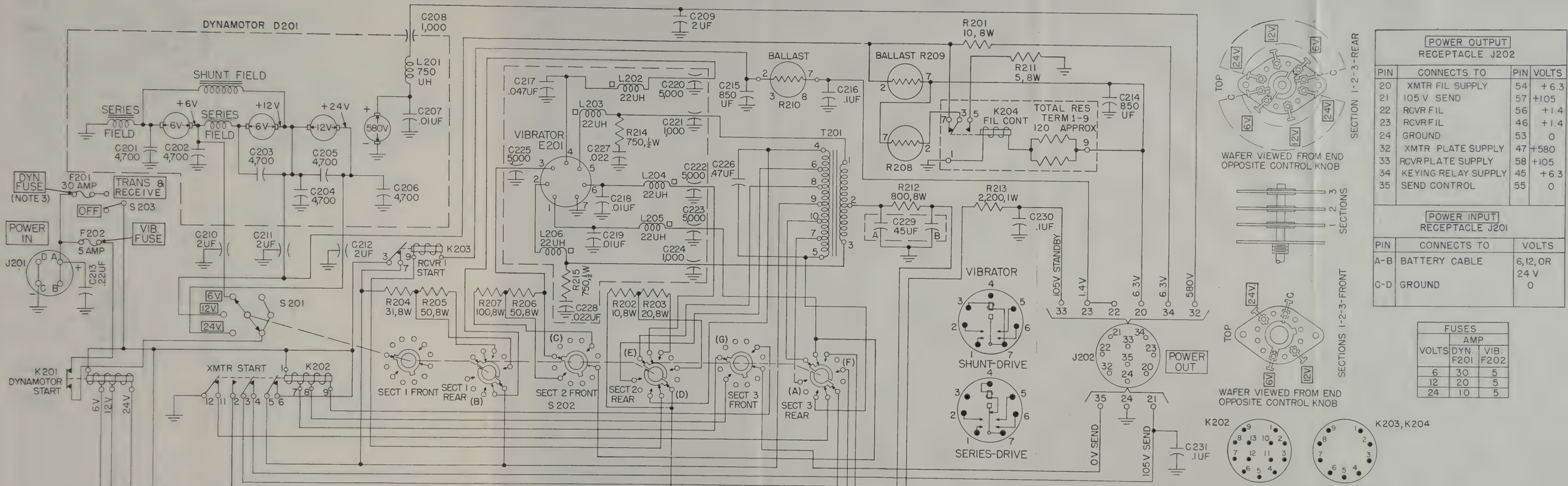

POWER OUTPUT RECEPTACLE J202			
PIN	CONNECTS TO	PIN	VOLTS
20	XMTR FIL SUPPLY	54	+6.3
21	105 V SEND	57	+105
22	RCVR FIL	56	+1.4
23	RCVR FIL	46	+1.4
24	GROUND	53	0
32	XMTR PLATE SUPPLY	47	+580
33	RCVR PLATE SUPPLY	58	+105
34	KEYING RELAY SUPPLY	45	+6.3
35	SEND CONTROL	55	0

POWER INPUT RECEPTACLE J201		
PIN	CONNECTS TO	VOLTS
A-B	BATTERY CABLE	6, 12, OR 24 V
C-D	GROUND	0

FUSES		
VOLTS	AMP DYN. F201	AMP VIB. F202
6	30	5
12	20	5
24	10	5

NOTES:
1. SOCKETS ARE SHOWN AS VIEWED FROM INSIDE.
2. SWITCHES S 201 & S 202 SHOWN IN [6V.] POSITION VIEWED FROM END OPPOSITE CONTROL KNOB. SECTION 1 IS CLOSEST TO THE KNOB.
3. A 20-AMP FUSE IS USED FOR [12V.] OPERATION AND A 10-AMP FUSE IS USED FOR [24V.] OPERATION.
4. POWER SUPPLY IS SHOWN FOR [SEND] POSITION OF XMTR CONTROL [E].
5. UNLESS OTHERWISE SHOWN, RESISTORS ARE IN OHMS, CAPACITORS ARE IN UUF.
6. [ ] INDICATES EQUIPMENT MARKINGS.

TM 263-406

Figure 173. Dynamotor-Power Supply DY-88/GRC-9X, schematic diagram

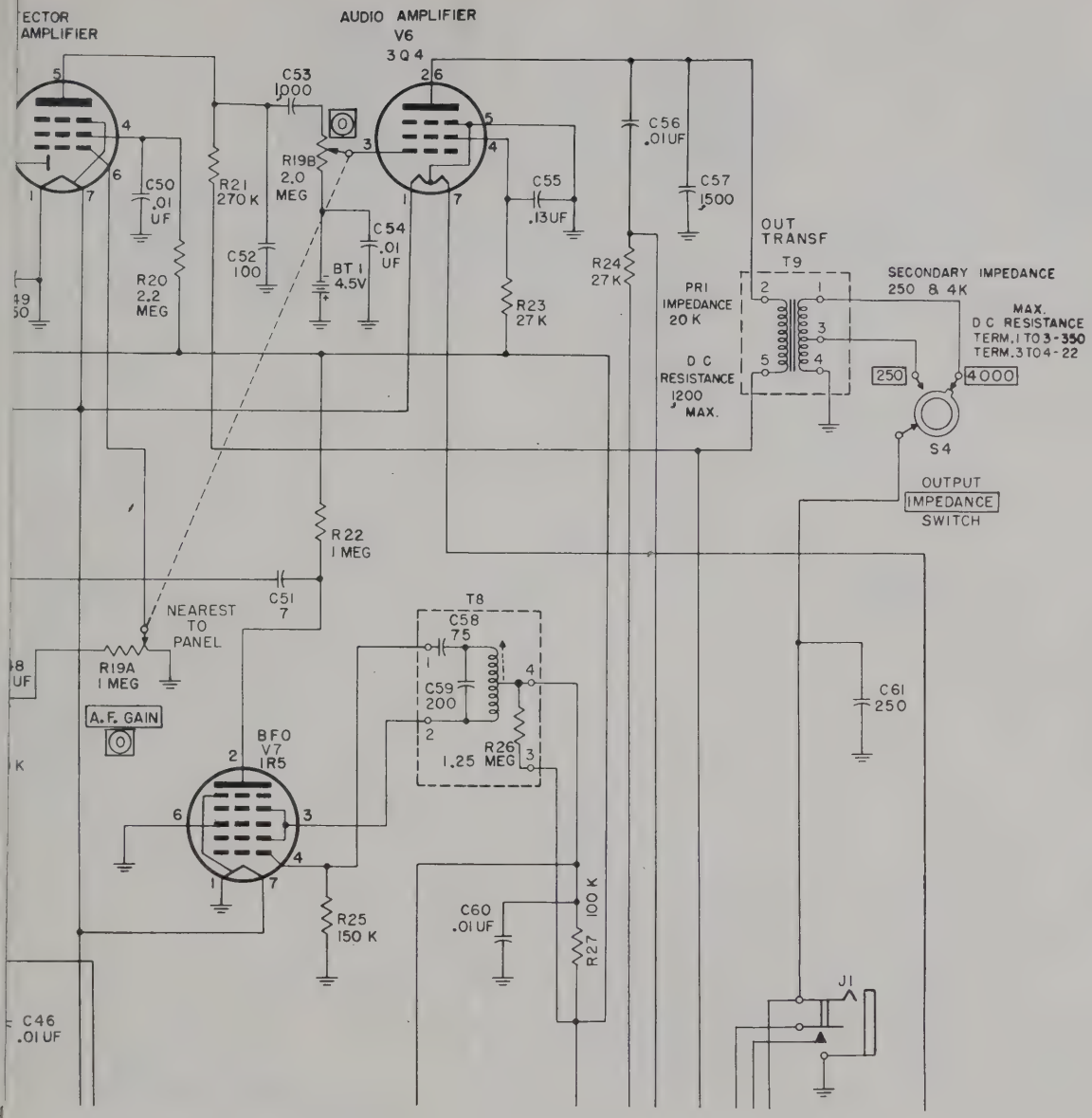

diagram.

, AND 1 MEG (OR 1.2 MEG)

AD 240 UUF RESPECTI

NOB.

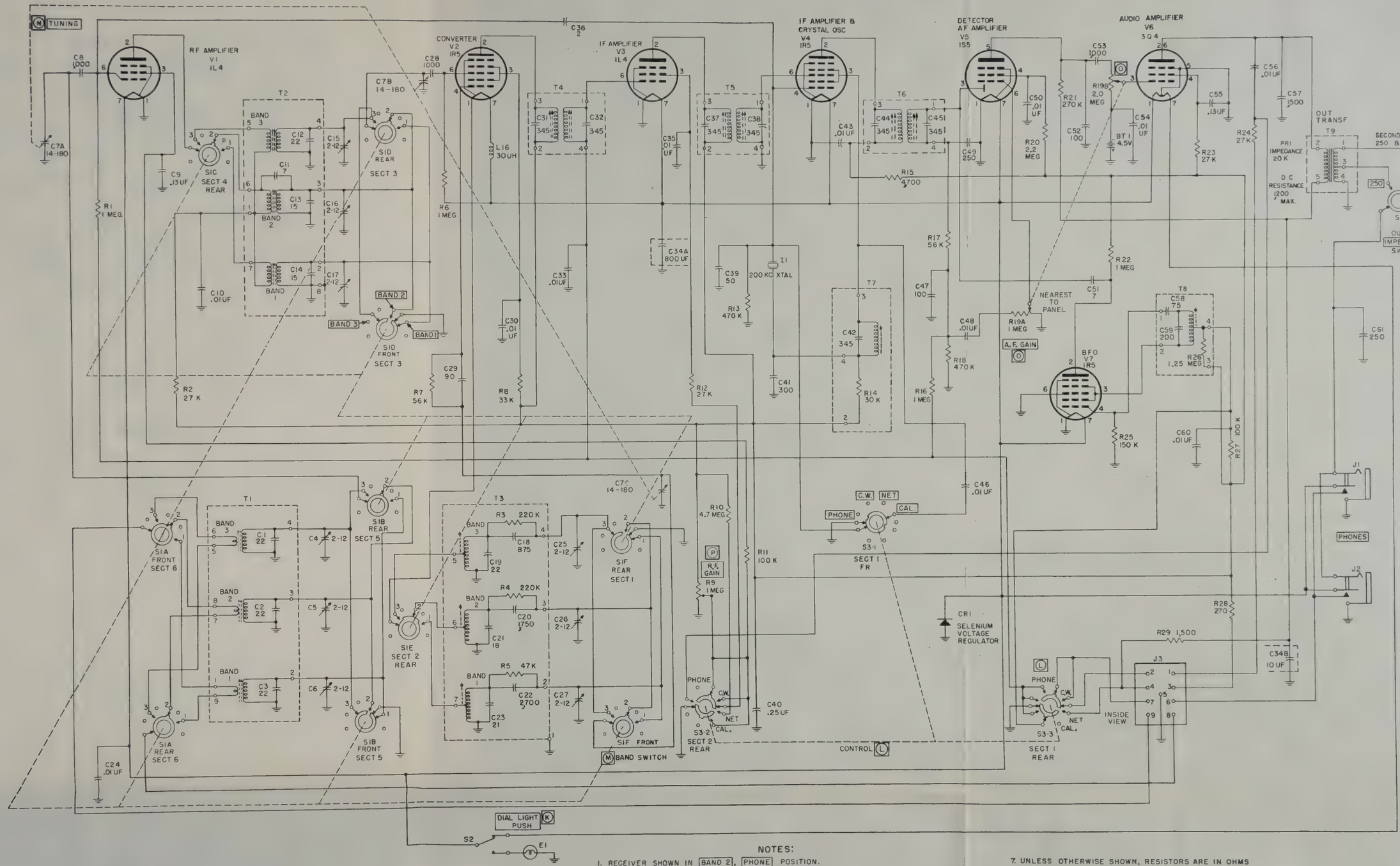

NOTES:

1. RECEIVER SHOWN IN BAND 2, PHONE POSITION.
2. ALL SWITCH SECTIONS ARE SHOWN AS VIEWED FROM FRONT PANEL.
3. FRONT SECTION OF EACH WAFER SECTION IS THE ONE NEAREST CONTROL KNOB.
4. J3 TERMINALS:
   1. SIDETONE
   2. NET +105V
   3. RECEIVER +105V
   4. +105V
   5. GROUND
   6. RECEIVER 1.4V
   7. MOD TUBE CONTROL
   8. RECEIVER ANTENNA
   9. RECEIVER ANTENNA
5. CAPACITORS C13, C19, C29, C39, AND C49 ARE 17, 18, 91, 51, AND 240 UUF RESPECTIVELY IN LATER MODELS.
6. RESISTORS R7, R14, R21, AND R26 ARE 57K, 27K, 470K, AND 1 MEG (OR 1.2 MEG) RESPECTIVELY IN LATER MODELS.
7. UNLESS OTHERWISE SHOWN, RESISTORS ARE IN OHMS AND CAPACITORS ARE IN UUF.
8. ▭ INDICATES EQUIPMENT MARKINGS.

Figure 175. Receiver section, schematic diagram.

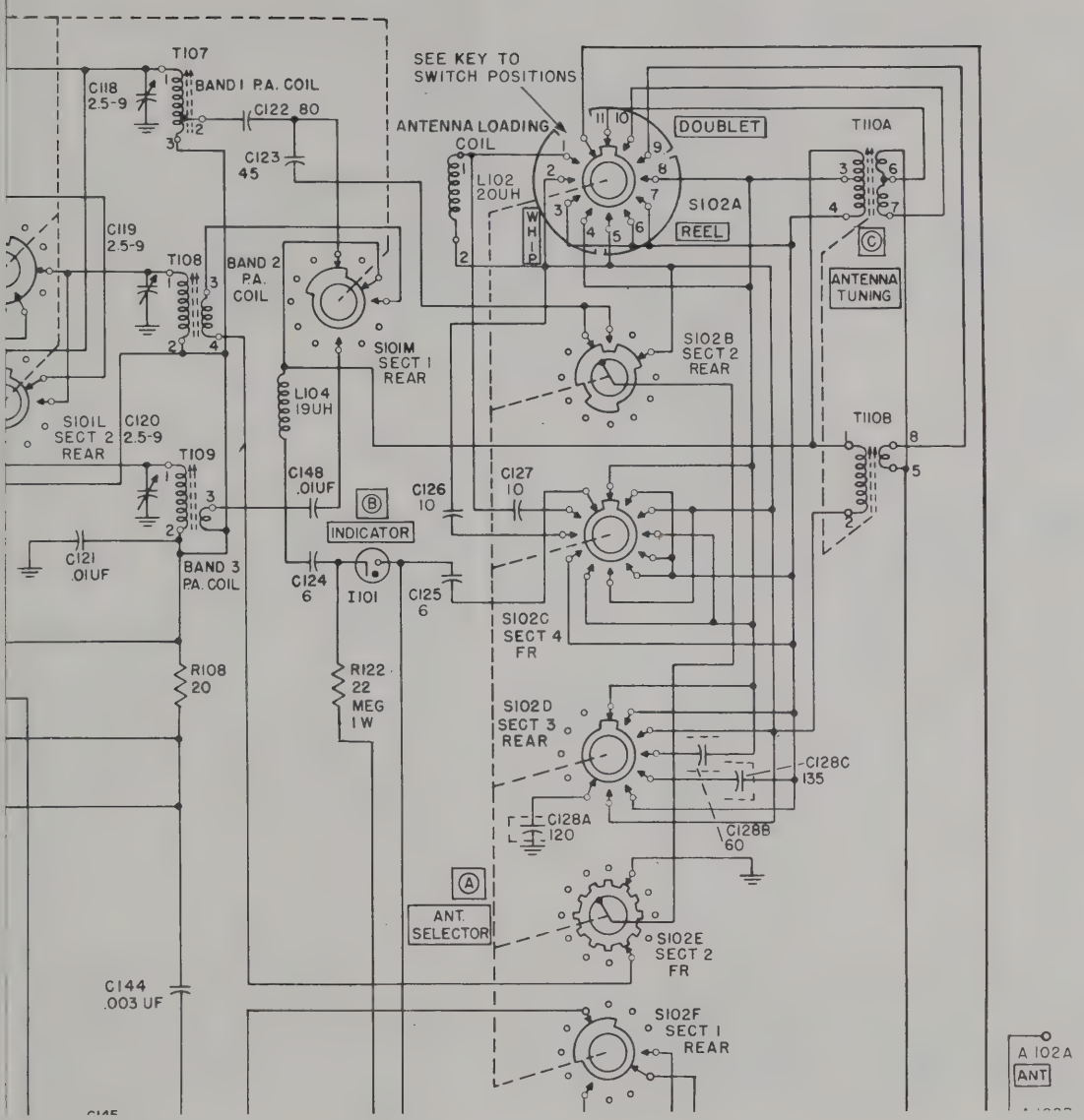

...tic diagram.

...SMITTER,

...WITH

...OUTSIDE OF T101.

RECP 734, 240, J202, J2, OR J1		TRANSMITTER [POWER] RECP J102		RECP 734,240,J202 J2, OR J1		TRANSMITTER [POWER] RECP J102	
PIN	CONNECTS TO	PIN	VOLTS	PIN	CONNECTS TO	PIN	VOLTS
20	" "	54	+6.3 REG	32	" "	47	+500
21	" "	57	105 SEND	33	" "	58	105 STANDBY
22	" "	56	1.4 STANDBY	34	" "	45	+6.3 KEY
23	" "	46	1.4 SEND	35	" "	55	SEND CONTROL
24	" "	53	A- B-				

NOTES:

1. TRANSMITTER IS SHOWN IN [OFF], [PHONE-LO], [BAND I-XTAL IA], KEY UP, [DOUBLET II] POSITION.
2. A. ROTARY SWITCHES SIO3 AND SIO5 ARE SHOWN AS VIEWED FROM THE KNOB END.
   B. ROTARY SWITCH SIO2 IS SHOWN AS VIEWED FROM OPPOSITE THE KNOB END.
   C. SECTIONS OF SWITCHES SIO2, SIO3, AND SIO5 ARE DESIGNATED IN NUMERICAL ORDER WITH SECTION I NEAREST THE KNOB END.
   D. ROTARY SWITCH SIO1 IS SHOWN AS VIEWED FROM THE LEFT SIDE OF THE FRONT OF THE TRANSMITTER, WITH THE TRANSMITTER IN UPRIGHT POSITION.
   E. SECTIONS OF SWITCH SIO1 ARE DESIGNATED IN NUMERICAL ORDER READING LEFT TO RIGHT WITH SECT. I ON THE LEFT OF THE TRANSMITTER, WITH THE TRANSMITTER IN UPRIGHT POSITION.
3. CAPACITOR C149 REPLACES C146 (6.5UUF) IN EARLIER MODELS. ALSO, C146 WAS LOCATED OUTSIDE OF T101.
4. CAPACITORS C150 AND C151 WERE NOT USED IN EARLIER MODELS.
5. CAPACITORS C149, C150, AND C151 ARE OF THE TEMPERATURE-COMPENSATING TYPE.
6. UNLESS OTHERWISE SHOWN, RESISTORS ARE IN OHMS, CAPACITORS ARE IN UUF.
7. [ ] INDICATES EQUIPMENT MARKINGS.

Figure 176. Transmitter section, schematic diagram.

KEY TO SWITCH POSITIONS

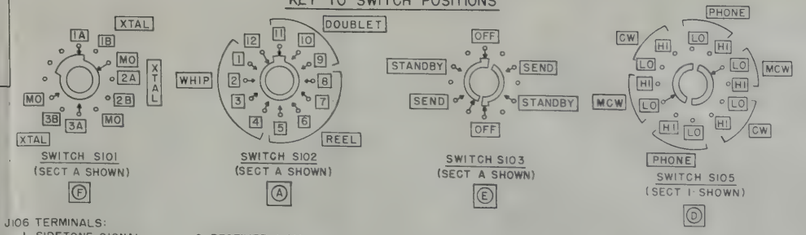

SWITCH S101 (SECT A SHOWN) [F]

SWITCH S102 (SECT A SHOWN) [A]

SWITCH S103 (SECT A SHOWN) [E]

SWITCH S105 (SECT I SHOWN) [D]

J106 TERMINALS:

1. SIDETONE SIGNAL
2. NET 105V
3. RECEIVER 105V
4. 105V
5. GROUND
6. RECEIVER 1.4V
7. MOD TUBE CONTROL
8. RECEIVER ANTENNA
9. RECEIVER ANTENNA

TM263-85

405863 O - 56 (Face p. 246) No. 5

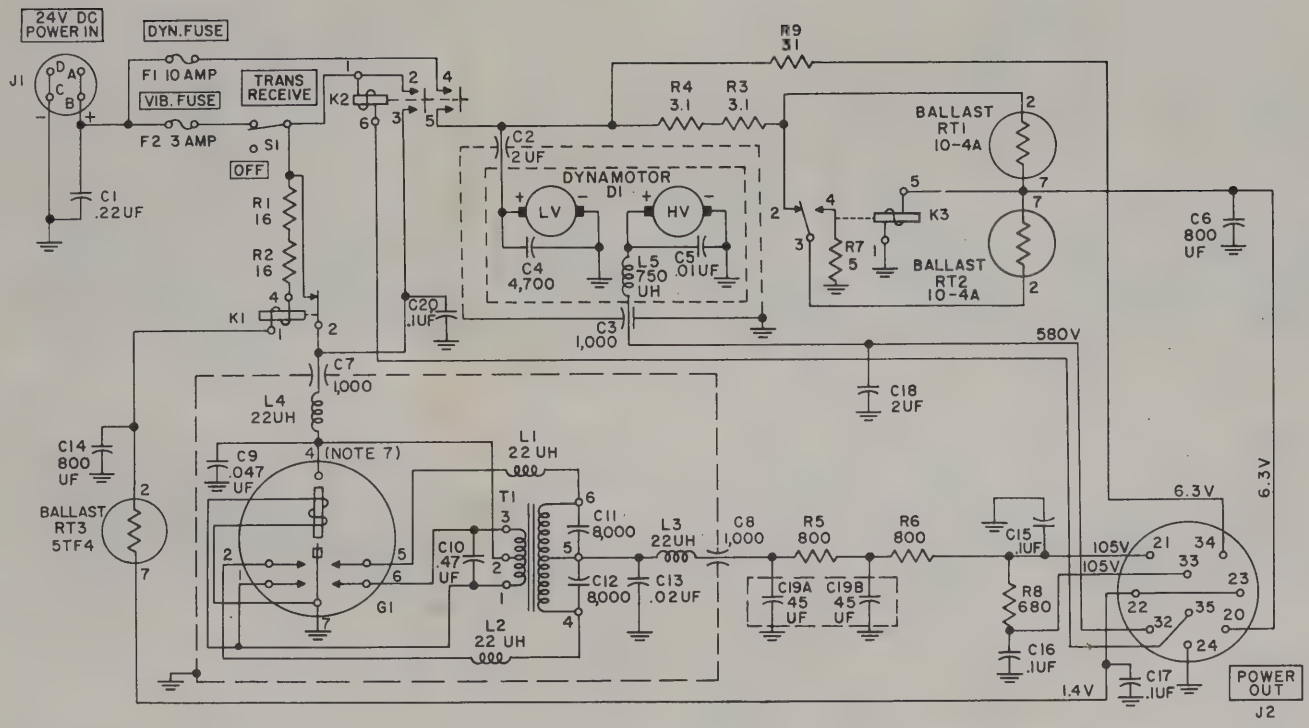

NOTES:

1. CAPACITOR C20 IS NOT USED IN THE A MODEL.
2. CAPACITOR C7 IS .1 UF IN THE A MODEL.
3. SOCKETS ARE VIEWED FROM INSIDE.
4. CONTROL Ⓔ ON XMTR IS SET TO STANDBY
5. SHUNT-DRIVE VIBRATOR IS USED.
6. ELECTRICAL SPECIAL PURPOSE CABLE ASSEMBLY CX-2031/U OR CX-2031A/U CONNECTS THE DYNM PWR SUPPLY TO THE VEHICULAR BATTERY.
7. PIN 4 ON VIBRATOR SOCKET IS USED WHEN A SERIES-FED VIBRATOR IS USED.
8. UNLESS OTHERWISE SHOWN, RESISTORS ARE IN OHMS, CAPACITORS ARE IN UUF.
9. ▭ INDICATES EQUIPMENT MARKINGS.

TM263-219

Figure 174. Dynamotor-Power Supply DY–105/GRC–9X, schematic diagram.

INDEX

	Paragraph	Page
Additional equipment required	22	17
Adjustment:		
Index mark of transmitter main tuning capacitor.	216*d*	220
Transmitter keying relay K101	216*b*	220
Transmitter tuning control	216*a*	219
Voltage regulators in Generator GN–58–(*).	216*c*	220
Alinement procedures:		
Receiver	217–224	221–226
Transmitter	225, 226	226
Amplifier:		
First audio	92	90
Second audio	93	91
Transmitter power	106	104
Antenna chart	29*f*	28
Antenna installation:		
Field	29, 30, 31	27, 29, 30
Vehicular	36	40
Antenna switching and tuning circuits:		
Receiver	85, 86	84, 85
Transmitter	110	110
Antijaming	60	63
Assembly description of receiver-transmitter.	8	9
Battery operation	46*f*	54
Beat-frequency oscillator:		
Alinement	220	222
Theory	94	92
Block diagram:		
Receiver	84	83
Transmitter	100	98
Calibration:		
Receiver	52	56
Transmitter	58	62
Carrying bags, contents	24*b*	21
Checking new equipment	25	21
Components, table	7	8
Connections:		
Dynamotor-Power Supply DY–88/GRC–9.	40*b*	47
Dynamotor-Power Supply DY–105/GRC–9X.	40*c*	47
Power Supply PP–327-(*)/GRC–9Y.	40*d*	47
Radio set	39	44
Receiver-transmitter	38	44
Vibrator power supply	40*a*	45
Controls:		
Dynamotor-Power Supply DY–88/GRC–9.	44*a*	51
Dynamotor-Power Supply DY–105/GRC–9.	44*b*	51
Generator power supply	44*d*	52
Power Supply PP–327-(*)/GRC–9.	44*e*	52
Power Units PE–162–(*)	44*f*	52
Receiver	43	49
Transmitter	42	48
Vibrator power supply	44*c*	52
Converter stage	88	87
Cord CD–1086, inspection and repair	26	25
Crystal:		
Calibrating circuits, receiver	91	89
Calibrator oscillator alignment	224	226
Installation:		
Receiver	32	33
Transmitter	32	33
Operation of transmitter	57	61
Demolition of radio set	269, 270	242
Description:		
Antenna components	15	16
Carrying bags	19	16
Dynamotor-Power Supply DY–88/GRC–9.	12	14
Dynamotor-Power Supply DY–105/GRC–9X.	13	14
Generator GN–58–(*)	14	15
Headset HS–30–(*)	22*e*	17
Key J–45	20	16
Loudspeaker LS–7	16	16
Microphones	22*c*	17
Mounting MT–350	18	16
Power cords	16	16
Radio Set AN/GRC–9(*)	4	4
Receiver	8	9
Receiver-transmitter	9	13
Transmitter	10	13
Vibration power supply	11	13
Detector	92	90
Differences in models	23	18
Doublet antenna installation	31	30
Dynamotor-Power Supply DY–88/GRC–9:		
Description	12	14
Installation	37*b*	43
Lubrication	209	218
Operation	45, 46	52, 53

	Paragraph	Page
Dynamotor-Power Supply DY–88/GRC–9—Continued.		
Repair	190, 191, 197, 198, 198, 201 209, 211, 207–210 216–218	
Theory	146–154	139–145
Troubleshooting	191	198
Dynamotor-Power Supply DY–105/GRC–9X:		
Description	13	14
Installation	37*c*	44
Lubrication	213	218
Operation	45, 46	52, 53
Repair	193–195, 205–209, 211–215	218, 219
Theory	155–161	147–152
Troubleshooting	194	205
Equipment performance check list	83	77
Filament:		
Switching connections	97	94
Switching for transmitter section.	114	117
Theory for receiver	96	94
Theory for transmitter	116	120
Final testing:		
Power supplies	254–264	235–238
Receiver	228–243	229–232
Transmitter	244–253	233–235
First audio amplifier	92	90
Forms and records	2	3
Frequency doubler, transmitter	104	102
Generator GN–58–(*):		
Description	14	15
Differences in models	23, 127	18, 129
Installation	33	36
Lubrication	74	72
Operation	45	52
Sectionalizing trouble	183	181
Theory	123–126	126–128
Troubleshooting	187, 189	184
Headset HS–30–(*), description	22*e*	17
If. alinement	219	221
If. amplifier	90	88
Inspection and repair of Cord CD–1086.	26	25
Installation:		
Antennas	29–31	27–30
Dynamotor-Power Supply DY–88/GRC–9.	37*b*	43
Dynamotor-Power Supply DY–105/GRC–9X.	37*c*	44
Generator power supply	33	36
Radio set	34	39
Receiver-transmitter	35	39
Vibrator power supply	37*a*	41
Key:		
Connections	33	36
Description	20	16
Long-wire antenna installation	29	27
Loudspeaker LS–7, description	16	16
Lubrication:		
Dynamotor-Power Supply DY–88/GRC–9.	209	218
Dynamotor-Power Supply DY–105/GRC–9X.	213	218
Generator power supply	74	72
Receiver-transmitter	73	72
Master oscillator:		
Crystal-controlled	102	99
Noncrystal-controlled	101	98
Operation	56	59
Microphone:		
Connections	115	118
Description	22*c*	17
Modulator stage	112	111
Net operation:		
Receiver	49	55
Transmitter	59	62
Nomenclature	3	3
Operation:		
Battery BA–48 and generator	46*f*	54
Net	118	122
Power supplies	46	53
Receiver	47–54	54–56
Transmitter	55–60	57–63
Operational test	168	157
Oscillator:		
Receiver bfo	94	92
Receiver crystal calibration	91	89
Receiver local	88	87
Transmitter af modulator	112	111
Transmitter master oscillator	101, 102	98, 99
Packaging data	24	20
Phone operation, receiver	49	55
Power amplifier, transmitter	106	104
Power cords, description	16	16
Power supplies:		
Operation	46	53
Technical characteristics	6	4
Preventive maintenance:		
Use of forms	69	70
General techniques	68	67
Performing	71	70
Purpose and use	4	4
Radio Set AN/GRC–9(*):		
Additional equipment required	22	17
Assembly description	8	9
Components, table	7	8
Connections	38	44
Demolition	269, 270	242
Description	4	4
Differences in models	23	18
Installation:		
Field	29–38	27–44
Vehicular	34	39

	Paragraph	Page
Radio Set AN/GRC–9(*)—Continued.		
Lubrication	72–74, 205	71,72, 214
Nomenclature	1	3
Packaging data	24	20
Repacking	265–267	240
Shipment and limited storage	265–267	240
Shorting stick	64	64
System application	5	4
Technical characteristics	6	4
Tools supplied	62	64
Receiver section:		
Antenna switching and tuning circuit.	85, 86	84, 85
B+ switching circuit	99	97
Band switching	89	88
Beat-frequency oscillator	94	92
Block diagram	84	83
Calibration	91	89
Controls	43	49
Converter stage	88	87
Crystal calibrating circuit	91	89
Crystal installation	32	33
Description	9	13
Detector and first af amplifier	92	90
Differences in models	23	18
Filament circuit	96	94
Filament switching circuit	97	94
Final testing	228–243	229–232
IF. amplifier	90	88
Lubrication	73	72
Operation	46–54	53–56
Operation switch	95	93
Plate and screen grid circuits	98	95
Rf amplifier	87	85
Second af amplifier	93	91
Technical characteristics	6*b*	4
Tube installation	32	33
Removal of pluck out items	65, 66	65, 66
Repairs:		
Dynamotor-Power Supply DY–88/GRC–9.	198–201, 207–210	209–211, 216–218
Dynamotor-Power Supply DY–105/GRC–9X.	202, 212–214	211, 218, 219
Generator power supply	199, 201, 203–206	210, 211, 211–215
Transmitter, oscillator coil assembly.	197	209
Replacement of parts	198	209
Rf alinement, receiver	221	222
Rf amplifier, receiver	87	85
Running spares	21	16
Scope	1	3
Second audio amplifier	93	91
Service of used equipment	24	20
Shipment and limited storage	265–268	240, 241
Sidetone monitoring circuit, transmitter section.	113	116
Signal generator calibration	217	221
Siting	27	25
System application, radio set	5	4
Table of components	7	8
Technical characteristics	6	4
Test equipment:		
Organizational maintenance	62	64
Receiver alinement	217	221
Transmitter alinement	225	226
Theory:		
Dynamotor-Power Supply DY–88/GRC–9.	146–154	139–145
Dynamotor-Power Supply DY–105/GRC–9X.	155–162	147–152
Generator power supply	123–126	126–128
Receiver	84–99	83–97
Transmitter	100–122	98–126
Vibrator power supply	107–125	106–127
Tools supplied with radio set	63	64
Transmitter section:		
Antenna switching and tuning circuits.	110, 111	110, 111
Block diagram	100	98
Calibration	58	62
Controls	42	48
Crystal installation	32	33
Description	10	13
Filament connections	116	120
Final testing	244–253	233–235
Frequency doubler	104	102
Frequency doubler switching circuit.	105	104
Key connections	115	118
Keying relay	119	122
Master oscillator:		
Crystal-controlled	102	99
Self-excited	101	98
Switching circuit, crystal-controlled.	103	100
Switching circuit, self-excited.	105	104
Microphone connections	115	118
Modulator stage	112	111
Operation	55	57
Plate and screen voltage supply circuits.	117	120
Power amplifier	106	104
Protective circuit	109	107
Sidetone monitoring circuit	113	116
Technical characteristics	6*a*	4
Tube installation	32	33
Troubleshooting:		
Af tests	176	169
Charts	169	157
Data	164	154
Dc resistances:		
Receiver transformer and coils.	174	166
Transmitter coils and transformers.	182	177

	Paragraph	Page
Troubleshooting—Continued.		
Electron tube replacement procedure.	81	74
Equipment performance check list.	83	77
Generator performance check list.	184	183
If. tests	177	171
Localizing trouble in transmitter.	180	173
Operational test	168	157
Power supply circuit test	167	156
Precautions	166	156
Procedures	163	153
Receiver tube socket voltage and resistance diagram.	173	166
Resistance of generator power supply choke coils.	186	184
Rf tests	178	171
Sectionalizing trouble:		
Generator power supply	183	181
Transmitter	179	172
Vibrator power supply	187	184
Signal substitution notes	175	168
System sectionalization	80	74
Test equipment	165	155
Transmitter tube socket, voltage and resistance diagram.	181	177
Troubleshooting—Continued.		
Vibrator power supply disassembly.	188	189
Visual inspection	79	74
Tube installation:		
Receiver	32	33
Replacement	81	74
Transmitter	32	33
Unpacking, uncrating, and checking new equipment.	24, 25	20, 21
Unsatisfactory equipment report	2	3
Vehicular installation:		
Antenna	36	40
Radio set	34	39
Receiver-transmitter	35	39
Power supplies	37	41
Vibrator power supply:		
Controls	45*c*	53
Description	11	13
Differences in models	23	18
Operation under usual conditions	46*c*	53
Technical characteristics	6*c*	4
Theory	127–145	129–139
Vehicular installation	37	41
Weatherproofing	75, 76	72
Whip antenna installation	30	29

[AG 413.44 (6 Jun 56)]

BY ORDER OF THE SECRETARIES OF THE ARMY AND THE AIR FORCE:

MAXWELL D. TAYLOR,
General, United States Army,
Chief of Staff.

OFFICIAL:

JOHN A. KLEIN,
Major General, United States Army,
The Adjutant General.

N. F. TWINING,
Chief of Staff, United States Air Force.

OFFICIAL:

E. E. TORO,
Colonel, United States Air Force,
Air Adjutant General.

Distribution:

Active Army:

CNGB (1)
ASA (3)
Tec Svc, DA (1) except
  CSIGO (30)
Tec Svc Bd (1)
CONARC Bd (Incl ea test
  sec) (1)
Hq CONARC (5)
Army AA Comd (2)
OS Maj Comd (5)
OS Base Comd (5)
Log Comd (5)
Sp Wpn Comd (2)
MDW (1)
Armies (5)
Corps (2)
Div (2)
AAA Gp (2)
AAA Bn (2)
AAA Co (2)
Ft & Cp (2)
USMA (5)
Gen & Br Svc Sch (5) except
  Sig Sch (25)
Gen Depots (2) except
  Atlanta Gen Depot (none)
Sig Sec, Gen Depots (10)
Sig Depots (17)
US Army Tng Cen (2)
Army Cml Cen (4)
The Arty Cen (5)
PSYWAR Cen (2)
POE (OS) (2)
Trans Terminal Comd (2)
Army Terminals (2)
OS Sup Agencies (2)
Army Elct PG (1)
Sig Fld Maint Shops (3)
Sig Lab (5)
ACS (3)
Mil Dist (1)
Mil Msn (2)
Units organized under
  following TOE:
    3–266R (2)
    3–267R (2)
    5–15C (2)
    5–16C (2)
    5–17C (2)
    5–35R (2)
    5–36R (2)
    5–37R (2)
    5–55R (2)
    5–138C (2)
    5–192C (2)
5–225C (2)
5–226C (2)
5–227C (2)
5–315R (2)
5–316R (2)
5–317R (2)
5–348R (2)
5–367C (2)
5–412R (2)
5–415R (2)
5–416R (2)
5–417R (2)
6–100C (2)
6–101C (2)
6–115R (2)
6–116R (2)
6–125C (2)
6–126C (2)
6–135C (2)
6–136C (2)
6–200C (2)
6–201C (2)
6–225C (2)
6–226C (2)
6–235C (2)
6–236C (2)
6–300C (2)
6–401C (2)
6–415R (2)
6–416R (2)
6–435R (2)
6–501C (2)
6–515R (2)
6–525R (2)
6–535R (2)
6–536R (2)
6–537R (2)
6–575C (2)
6–576C (2)
6–577C (2)
6–615R (2)
6–616R (2)
6–626R (2)
7–2R (2)
7–11R (2)
7–12R (2)
7–13R (2)
7–14R (2)
7–15R (2)
7–16R (2)
7–31C (2)
7–32C (2)
7–33C (2)
7–34C (2)
7–35C (2)
7–36C (2)
7–95R (2)
7–96R (2)
8–15C (2)
8–16C (2)
8–18C (2)
9–25C (2)
9–26C (2)
9–35C (2)
9–36C (2)
9–167R (2)
10–17C (2)
11–7C (2)
11–16C (2)
11–18C (2)
11–57C (2)
11–117R (2)
11–127R (2)
11–128R (2)
11–500R(AA–AE) (2)
11–537R (2)
11–557C (2)
11–587R (2)
11–592R (2)
11–597R (2)
17–2R (2)
17–35C (2)
17–57C (2)
17–115R (2)
17–116R (2)
17–125R (2)
17–126R (2)
19–35R (2)
19–36R (2)
19–37R (2)
19–55R (2)
19–56R (2)
19–57R (2)
19–500R(AA–AE) (2)
20–45R (2)
20–47R (2)
20–300R (2)
20–511R (2)
20–512R (2)
30–600C(AA–AE) (2)
32–500R (2)
33–2C (2)
33–510R (2)
52–2C (2)
55–68R (2)
55–116R (2)
55–117R (2)
57–2C (2)
57–57C (2)

NG: State AG (6); units—same as Active Army except allowance is one copy to each unit.

USAR: None.

For explanation of abbreviations used, see SR 320–50–1.

☆ U.S. GOVERNMENT PRINTING OFFICE: 1960 O - 577221

CONTINUED FROM FRONT COVER.

CONDENSED OPERATING INSTRUCTIONS FOR RADIO SET AN/GRC-9 (*)

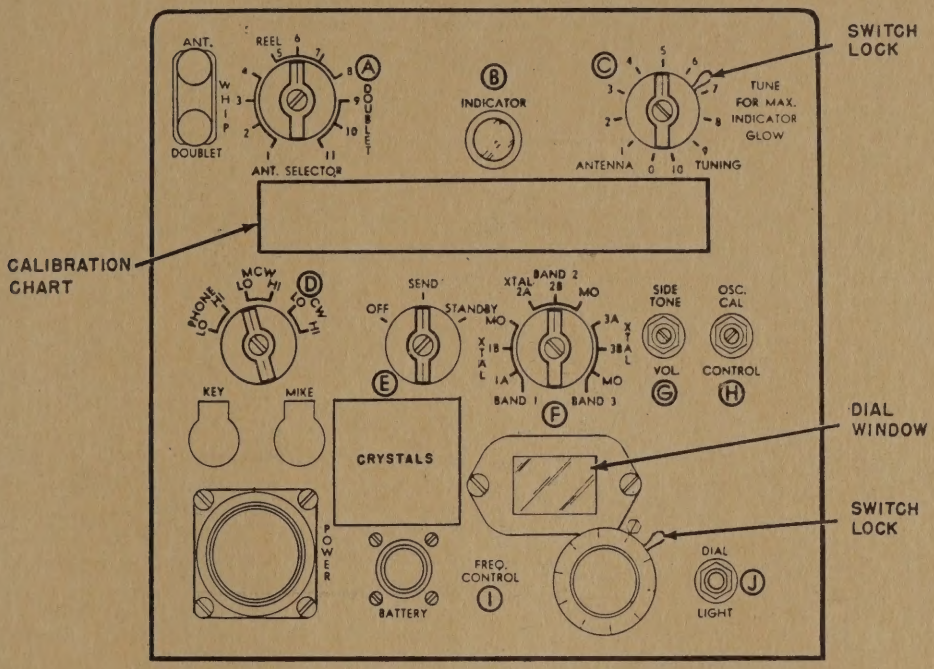

TO TRANSMIT

8. Turn switch Ⓓ to the type of transmission desired.
9. Turn switch Ⓐ to the highest numbered position of the antenna used.
10. Turn switch Ⓕ to the band position desired.
11. Turn control Ⓘ to the dial setting corresponding to the frequency of transmission as given on the calibration chart. Lock the tuning dial in place.
12. See that the red dots on INDICATOR Ⓑ lenses are adjacent to each other.
13. Turn switch Ⓔ to SEND.
14. Turn control Ⓒ while pressing the key down or closing the mike switch and TUNE FOR MAX. INDICATOR GLOW on INDICATOR lamp Ⓑ. Lock the switch knob in place.
15. For PHONE operation (switch Ⓓ), wait 2 seconds after closing the mike switch before speaking. When operating the mike, speak in a loud and clear voice.

TO TURN OFF RADIO SET

16. Turn switch Ⓔ to OFF.
17. Turn the power switches OFF.

AGO 10018A